WISENET

High Resolution Camera

User Manual

HCD-7010R/7020R/7030R
HCV-7010R/7020R/7030R
HCO-7010R/7020R/7030R

SEC.RU | Короткий путь к информации

Скачано с sec.ru

High Resolution Camera
User Manual

Copyright
©2017 Hanwha Techwin Co., Ltd. All rights reserved.

Trademark
Each of trademarks herein is registered. The name of this product and other trademarks mentioned in this manual are the registered trademark of their respective company.

Restriction
Copyright of this document is reserved. Under no circumstances, this document shall be reproduced, distributed or changed, partially or wholly, without formal authorization.

Disclaimer
Hanwha Techwin makes the best to verify the integrity and correctness of the contents in this document, but no formal
guarantee shall be provided. Use of this document and the subsequent results shall be entirely on the user's own responsibility. Hanwha Techwin reserves the right to change the contents of this document without prior notice.

❖**Design and specifications are subject to change without prior notice.**

SEC.RU | Короткий путь к информации
Скачано с sec.ru

Before operating the camera, confirm the camera model and correct input power voltage.
To help you understand this manual thoroughly, we'll introduce our model description.

■ HCD-70X0R/HCV-70X0R/HCO-70X0R SERIES

- **NTSC MODEL**
  - HCD-70X0R
  - HCV-70X0R
  - HCO-70X0R
- **PAL MODEL**
  - HCD-70X0RP
  - HCV-70X0RP
  - HCO-70X0RP

■ MODEL DESCRIPTION

- **HCX-70X0RX**

  SIGNAL SYSTEM

- **SIGNAL SYSTEM**
  - N → NTSC MODEL
  - P → PAL MODEL

SEC.RU | Короткий путь к информации Скачано с sec.ru

safety information

CAUTION

RISK OF ELECTRIC SHOCK.
DO NOT OPEN

CAUTION: TO REDUCE THE RISK OF ELECTRIC SHOCK, DO NOT REMOVE COVER (OR BACK) NO USER SERVICEABLE PARTS INSIDE. REFER SERVICING TO QUALIFIED SERVICE PERSONNEL.

This symbol indicates that dangerous voltage consisting a risk of electric shock is present within this unit.

This exclamation point symbol is intended to alert the user to the presence of important operating and maintenance (servicing) instructions in the literature accompanying the appliance.

WARNING

- To prevent damage which may result in fire or electric shock hazard, do not expose this appliance to rain or moisture.
- To prevent injury, this apparatus must be securely attached to the floor/wall in accordance with the installation instructions.

WARNING

1. Be sure to use only the standard adapter that is specified in the specification sheet. Using any other adapter could cause fire, electrical shock, or damage to the product.
2. Incorrectly connecting the power supply or replacing battery may cause explosion, fire, electric shock, or damage to the product.
3. Do not connect multiple cameras to a single adapter. Exceeding the capacity may cause abnormal heat generation or fire.
4. Securely plug the power cord into the power receptacle. insecure connection may cause fire.
5. When installing the camera, fasten it securely and firmly. The fall of camera may cause personal injury.

SEC.RU | Короткий путь к информации
Скачано с sec.ru

6. Do not place conductive objects (e.g. screwdrivers, coins, metal parts, etc.) or containers filled with water on top of the camera. doing so may cause personal injury due to fire, electric shock, or falling objects.
7. Do not install the unit in humid, dusty, or sooty locations. doing so may cause fire or electric shock.
8. If any unusual smells or smoke come from the unit, stop using the product. in such case, immediately disconnect the power source and contact the service center. continued use in such a condition may cause fire or electric shock.
9. If this product fails to operate normally, contact the nearest service center. never disassemble or modify this product in any way. (Hanwha Techwin is not liable for problems caused by unauthorized modifications or attempted repair.)
10. When cleaning, do not spray water directly onto parts of the product. doing so may cause fire or electric shock.

CAUTION

1. Do not drop objects on the product or apply strong shock to it. Keep away from a location subject to excessive vibrationor magnetic interference.
2. Do not install in a location subject to high temperature (over 55°C), low temperature (below -10°C(HCO-7070R:-30°C)), or high humidity. Doing so may cause fire or electric shock.
3. If you want to relocate the already installed product, be sure to turn off the power and then move or reinstall it.
4. Remove the power plug from the outlet when then there is a lightning. Neglecting to do so may cause fire or damage to the product.
5. Keep out of direct sunlight and heat radiation sources. It may cause fire.
6. Install it in a place with good ventilation.
7. Avoid aiming the camera directly towards extremely bright objects such as sun, as this may damage the CMOS image sensor.
8. Apparatus shall not be exposed to dripping or splashing and no objects filled with liquids, such as vases, shall be placed on the apparatus.
9. The Mains plug is used as a disconnect device and shall stay readily operable at any time
10. Do not expose the camera to radioactivity. Radioactivity exposure may damage the CMOS.

SEC.RU | Короткий путь к информации
Скачано с sec.ru

safety information

FCC Statement

This device complies with part 15 of the FCC Rules. Operation is subject to the following two conditions :

1) This device may not cause harmful interference, and
2) This device must accept any interference received including interference that may cause undesired operation.

CAUTION

This equipment has been tested and found to comply with the limits for a Class A digital device, pursuant to part 15 of FCC Rules. These limits are designed to provide reasonable protection against harmful interference when the equipment is operated in a commercial environment. This equipment generates, uses, and can radiate radio frequency energy and, if not installed and used in accordance with the instruction manual, may cause harmful interference to radio communications. Operation of this equipment in a residential area is likely to cause harmful interference in which case the user will be required to correct the interference at his own expense.

IC Compliance Notice

This Class A digital apparatus meets all requirements of the Canadian Interference.-Causing Equipment Regulations of ICES-003.

Correct Disposal of This Product (Waste Electrical & Electronic Equipment)

(Applicable in the European Union and other European countries with separate collection systems)

This marking on the product, accessories or literature indicates that the product and its electronic accessories (e.g. charger, headset, USB cable) should not be disposed of with other household waste at the end of their working life. To prevent possible harm to the environment or human health from uncontrolled waste disposal, please separate these items from other types of waste and recycle them responsibly to promote the sustainable reuse of material resources.

Household users should contact either the retailer where they purchased this product, or their local government office, for details of where and how they can take these items for environmentally safe recycling.

Business users should contact their supplier and check the terms and conditions of the purchase contract. This product and its electronic accessories should not be mixed with other commercial wastes for disposal.

Correct disposal of batteries in this product

(Applicable in the European Union and other European countries with separate battery return systems.)

This marking on the battery, manual or packaging indicates that the batteries in this product should not be disposed of with other household waste at the end of their working life. Where marked, the chemical symbols Hg, Cd or Pb indicate that the battery contains mercury, cadmium or lead above the reference levels in EC Directive 2006/66. If batteries are not properly disposed of, these substances can cause harm to human health or the environment.

To protect natural resources and to promote material reuse, please separate batteries from other types of waste and recycle them through your local, free battery return system.

SEC.RU | Короткий путь к информации
Скачано с sec.ru

important safety instructions

1. Read these instructions.
2. Keep these instructions.
3. Heed all warnings.
4. Follow all instructions.
5. Do not use this apparatus near water.
6. Clean only with dry cloth.
7. Do not block any ventilation openings. Install in accordance with the manufacturer's instructions.
8. Do not install near any heat sources such as radiators, heat registers, or other apparatus (including amplifiers) that produce heat.
9. Do not defeat the safety purpose of the polarized or grounding-type plug. A polarized plug has two blades with one wider than the other. A grounding type plug has two blades and a third grounding prong. The wide blade or the third prong is provided for your safety. If the provided plug does not fit into your outlet, consult an electrician for replacement of the obsolete outlet.
10. Protect the power cord from being walked on or pinched particularly at plugs, convenience receptacles, and the point where they exit from the apparatus.
11. Only use attachments/accessories specified by the manufacturer.
12. Use only with cart, stand, tripod, bracket, or table specified by the manufacturer, or sold with the apparatus.
13. Unplug this apparatus when a card is used. Use caution when moving the cart/ apparatus combination to avoid injury from tip-over.
14. Refer all servicing to qualified service personnel. Servicing is required when the apparatus has been damaged in any way, such as powersupply cord or plug is damaged, liquid has been spilled or objects have fallen into the apparatus, the apparatus has been exposed to rain or moisture, does not operate normally, or has been dropped.

15. This product is intended to be supplied by a Listed Power Supply Unit marked "Class 2" or "LPS" and rated from 24 Vac (50/60 Hz) min.0.37 A or 12 Vdc, min.0.41A.
16. If you use excessive force when installing the product, the camera may be damaged and malfunction.
    If you forcibly install the product using non-compliant tools, the product may be damaged.

SEC.RU | Короткий путь к информации
Скачано с sec.ru

important safety instructions

17. Do not install the product in a place where chemical substances or oil mist exists or may be generated. As edible oils such as soybean oil may damage or warp the product, do not install the product in the kitchen or near the kitchen table.
    This may cause damage to the product.

18. When installing the product, be careful not to allow the surface of the product to be stained with chemical substance.
    Some chemical solvents such as cleaner or adhesives may cause serious damage to the product's surface.

19. If you install/disassemble the product in a manner that has not been recommended, the production functions/performance may not be guaranteed.
    Install the product by referring to "Installation & connection" in the user manual.

20. Installing or using the product in water can cause serious damage to the product.

Apparatus shall not be exposed to dripping or splashing and no objects filled with liquids, such as vases, shall be placed on the apparatus

eco
RoHS compliant

Hanwha Techwin cares for the environment at all product manufacturing stages, and is taking measures to provide customers with more environmentally friendly products.
The Eco mark represents Hanwha Techwin's devotion to creating environmentally friendly products, and indicates that the product satisfies the EU RoHS Directive.

SEC.RU | Короткий путь к информации
Скачано с sec.ru

contents

INTRODUCTION 10

10 Features
11 Components and Accessories
14 Component names and functions

INSTALLATION 17

17 Before installation
17 Installation
22 Adjusting the monitoring direction for the camera

CONNECTION 24

24 Connecting to Monitor
25 Connecting to Power
27 Using Coaxial Communications

CAMERA OPERATION 29

29 Menu Configuration
29 Menu Setup

TROUBLESHOOTING 40

40 Troubleshooting

SPECIFICATIONS 41

41 Specifications (HCD-7010R/7020R/7030R)
43 Specifications (HCv-7010R/7020R/7030R)
45 Specifications (HCO-7010R/7020R/7030R)
47 Dimension

SEC.RU | Короткий путь к информации
Скачано с sec.ru

FEATURES

- **High Resolution**
  Use of a 4.1 mega pixel CMOS device provides clear pictures with a resolution of 2560x1440.

- **Excellent Sensitivity**
  - HCD-7010R/HCV-7010R/HCO-7010R
    Color : 0.26Lux (F1.8, 1/30sec)
    B/W : 0Lux(IR LED on)
  - HCD-7020R/HCV-7020R/HCO-7020R
    HCD-7030R/HCV-7030R/HCO-7030R
    Color : 0.27Lux (F2.0, 1/30sec)
    B/W : 0Lux(IR LED on)

- **D-WDR**
  If an object has a large variance between bright and dark areas, it will keep bright areas bright and make selected dark areas bright, so that the overall brightness can be maintained.

- **Day&Night**
  This camera has a function that automatically selects the mode that is appropriate for daytime or night-time conditions. The COLOR mode operates in daytime conditions to provide optimum colors, and B/W mode operates in night-time conditions to enhance the definition of the image.

- **Miscellaneous Functions**
  HLC(High Light Compensation), REVERSE , SHARPNESS and PRIVACY functions are provided.

- **Communication**
  AHD : ACP (AHD Coax Protocol), CVBS : Pelco-C (Coaxitron)

- **OSD**
  The camera's OSD is complimented by 14 languages.
  - English, German, Italian, French, Spanish, Russian, Czech, Polish, Romanian, Serbian, Swedish, Danish, Turkish, Portuguese

SEC.RU | Короткий путь к информации
Скачано с sec.ru

COMPONENTS AND ACCESSORIES

Check if the following items are included in the product package.

<HCD-7010R/7020R/7030R>

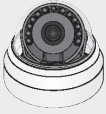

Camera

Quick Manual

Screws

Template

Video Output Cable

SEC.RU | Короткий путь к информации
Скачано с sec.ru

introduction

<HCV-7010R/7020R/7030R>

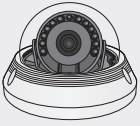

Camera

Quick Manual

Template

Tapping Screw

Machine Screws

L Wrench

Card-type moisture absorbent

Video Output Cable

SEC.RU | Короткий путь к информации
Скачано с sec.ru

<HCO-7010R/7020R/7030R>

Camera

Quick Manual

Screws

Template

Wrench

Card-type moisture absorbent

Video Output Cable

SEC.RU | Короткий путь к информации
Скачано с sec.ru

COMPONENT NAMES AND FUNCTIONS

HCD-7010R/7020R/7030R

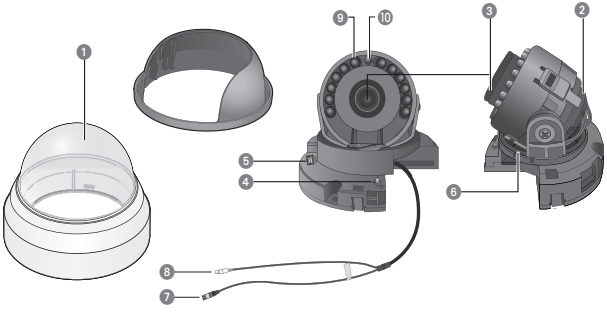

1. **Dome Cover**
2. **Shield Case**
3. **Rotate base :** control rotating angle of camera.
4. **Vari-focal Lens Module :** HCD-7010R : 2.8mm(F1.8)
   HCD-7020R : 4.0mm(F2.0)
   HCD-7030R : 6.0mm(F2.0)
5. **Function Setup switch :** Display the menu on the screen and move the cursor to four directions to confirm status or after changing a selected item.
   ※ Switching between AHD and CVBS modes: Press the SET button for more than 5 seconds.
6. **Video Output Terminal to Monitor**
7. **Pan Base :** Control panning angle of camera.
8. **Power Input Connector**
9. **Video Output Jack :** Video signals are output through this port. Connect this port to the Video IN port of a AHD DVR.
10. **IR LED :** These infrared LED's are controlled by the illumination sensor.
11. **Illumination sensor :** Detects incoming light to control the IR LED.

SEC.RU | Короткий путь к информации
Скачано с sec.ru

HCV-7010R/7020R/7030R

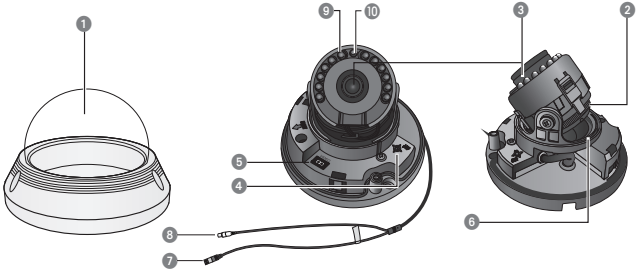

1 **Dome Cover**

2 **Rotate base :** control rotating angle of camera.

3 **Vari-focal Lens Module :** HCV-7010R : 2.8mm(F1.8)
HCV-7020R : 4.0mm(F2.0)
HCV-7030R : 6.0mm(F2.0)

4 **Function Setup switch :** Display the menu on the screen and move the cursor to four directions to confirm status or after changing a selected item.
※ Switching between AHD and CVBS modes: Press the SET button for more than 5 seconds.

5 **Video Output Terminal to Monitor**

6 **Pan Base :** Control panning angle of camera.

7 **Power Input Connector**

8 **Video Output Jack :** Video signals are output through this port. Connect this port to the Video IN port of a AHD DVR.

9 **IR LED :** These infrared LED's are controlled by the illumination sensor.

10 **Illumination sensor :** Detects incoming light to control the IR LED.

SEC.RU | Короткий путь к информации
Скачано с sec.ru

introduction

HCO-7070R

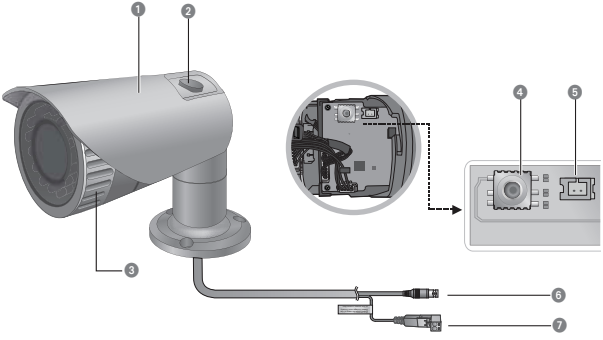

1. **Camera Sunshield**
2. **Knob Sunshield :** Fixing the sunshield onto the camera.
3. **Front cover**
4. **Function Setup Switch :** Display the menu on the screen and move the cursor to four directions to confirm status or after changing a selected item.
   ※ Switching between AHD and CVBS modes: Press the SET button for more than 5 seconds.
5. **Video Output Terminal to Monitor**
6. **VIDEO OUTPUT jack :** Video signals are output through this port. Connect this port to the Video IN port of a AHD DVR.
7. **Power input terminal :** Connect the power as specified for each model here.

- To ensure the weatherproof integrity is maintained, Before installation the front cover, it's necessary to push tight first. and then turn it clockwise to locking indication.

SEC.RU | Короткий путь к информации Скачано с sec.ru

Installation

BEFORE INSTALLATION

Ensure you read out the following instructions before installing the camera:

- You have to check whether the location (ceiling or wall) can bear five times the weight of your camera.
- Don't let the cable to be caught in improper place or the electric line cover to be damaged. Otherwise it may cause a breakdown or fire.
- Before installing your camera, you have to adjust the lens focus, zoom, and switch settings.
- When installing your camera, don't allow any person to approach the installation site.

INSTALLATION

Disassembling(HCD-7010R/7020R/7030R)

1. Use one hand to hold the camera's bottom part and turn the cover counterclockwise with another hand to separate it.

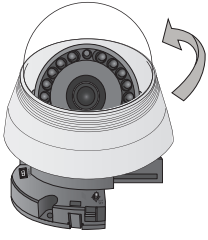

2. Lift up the shield case to separate it.

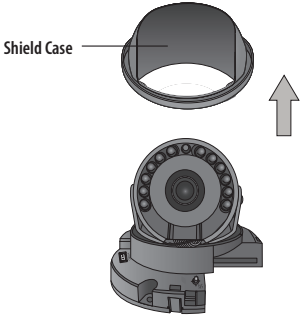

SEC.RU | Короткий путь к информации
Скачано с sec.ru

Installation

Disassembling(HCV-7010R/-7020R/-7030R)

Using the L-wrench provided, loosen 3 screws by turning them counterclockwise and separate the dome cover.

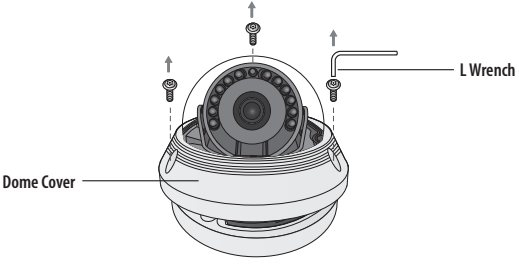

SEC.RU | Короткий путь к информации
Скачано с sec.ru

Installation(HCD-7010R/7020R/7030R)

1. Attach the installation template to the selected area and punch 2 holes as shown in the fi gure.

2. Use the 2 supplied screws to fix the camera to the 2 punched holes.
   - Set the <TOP FRONT> mark imprinted on the camera to face the direction of camera monitoring.

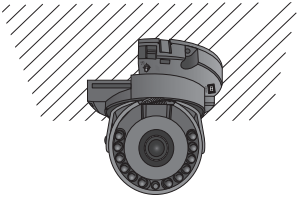

3. Adjust the lens in a desired direction by referring to the "Adjusting the monitoring direction for the camera" section.

4. Attach the dome cover and the shield case to the main body.

- Pay attention to the direction for assembly.

SEC.RU | Короткий путь к информации
Скачано с sec.ru

Installation

Installing the camera on a ceiling or wall(HCV-7010R/-7020R/-7030R)

1. Drill holes on the ceiling by matching to the holes on the case bed, and insert plastic anchors (HUD 5) (not included) fully into the holes. Fix the case bed on the ceiling by using screws . (3 places)

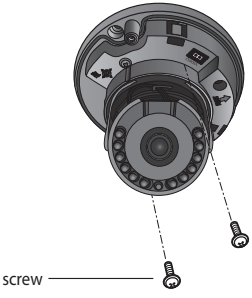

2. Connect Power and video cables and arrange them through the hole you want to pass when mounting the main body on the mounting bracket, note that not to damage or squeeze the cables.

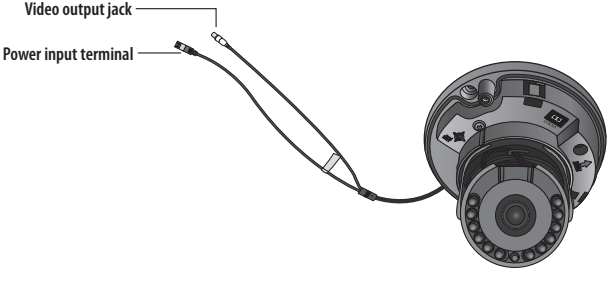

SEC.RU | Короткий путь к информации
Скачано с sec.ru

3. Adjust the lens in a desired direction by referring to the “Adjusting the monitoring direction for the camera”section.

4. Close the dome cover.
   - To ensure waterproofing, tight up the fixing bolts using the L-wrench.

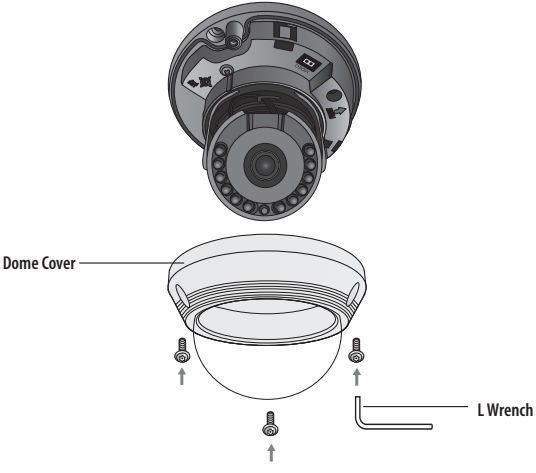

- The installation should be done by qualified service personnel or system installers.
- If the ceiling material is not strong enough to hold the installation screws, the camera may fall off. Reinforce the ceiling as needed.

SEC.RU | Короткий путь к информации
Скачано с sec.ru

Installation

ADJUSTING THE MONITORING DIRECTION FOR THE CAMERA

<HCD-7010R/7020R/7030R>

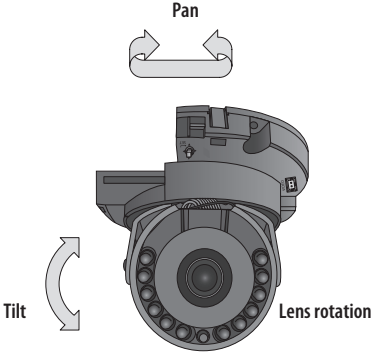

<HCV-7010R/7020R/7030R>

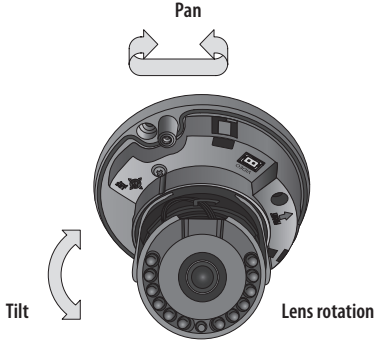

SEC.RU | Короткий путь к информации
Скачано с sec.ru

- Adjusting the monitoring direction
  You can adjust the camera direction only when the camera is fixed on the ceiling. Where, rotating the camera unit to the left or right is called Pan, adjusting the tilt is called Tilt, and turning the lens on its axis is called Rotation.
  - The effective range of pan is a total of 350 degrees.
  - The effective range of rotation is a total of 355 degrees.
  - The effective range of tilt is a total of 67 degrees.

- **Methods of adjustment**
  1. After installing the camera, adjust the panning angle in consideration of the monitoring direction.
  2. Adjust the view angle and focus for the video.
     - For convenience of operation, adjust the rotation part to fix the lever.
  3. Set the horizontal angle so that the image is not reversed.
  4. Adjust the tilt angle so that the camera faces toward the monitoring object.

SEC.RU | Короткий путь к информации
Скачано с sec.ru

CONNECTING TO MONITOR

Connect the Video OUT port on the rear panel of the camera to a AHD DVR.

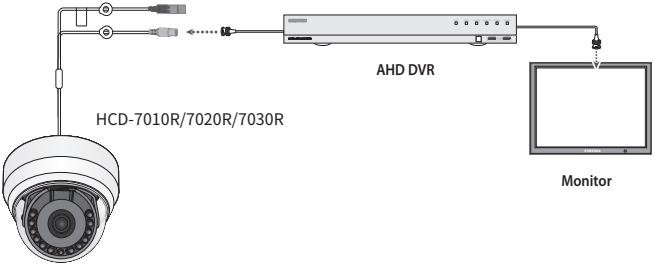

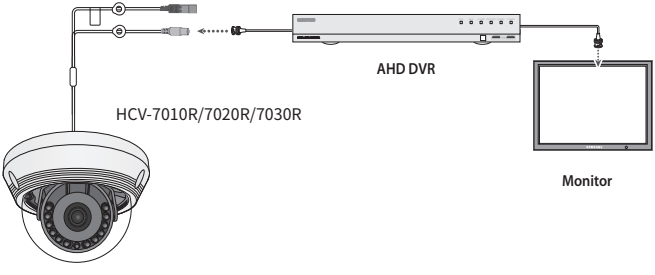

SEC.RU | Короткий путь к информации
Скачано с sec.ru

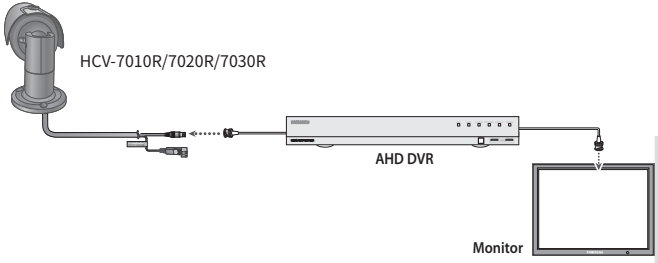

- As the connecting method varies with the instruments, refer to the manual supplied with the instrument.
- Only connect the cable when the power is turned off.

- This product supports 4 video output formats of AHD, CVBS. The default is AHD. Select the video output appropriate for your DVR.

CONNECTING TO POWER

You can connect power as shown in the following figure.

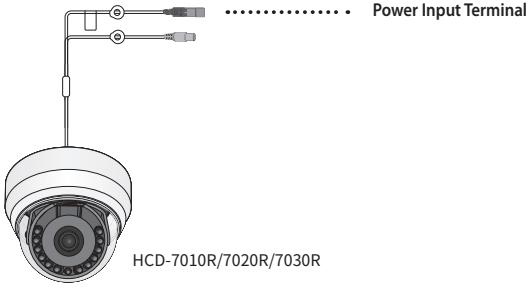

SEC.RU | Короткий путь к информации
Скачано с sec.ru

connection

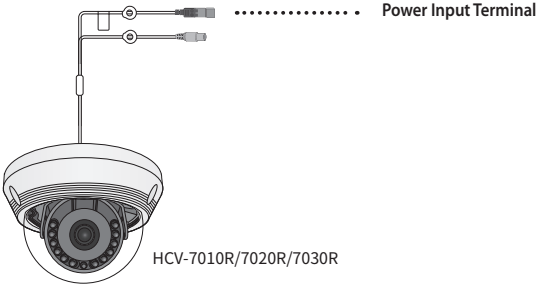

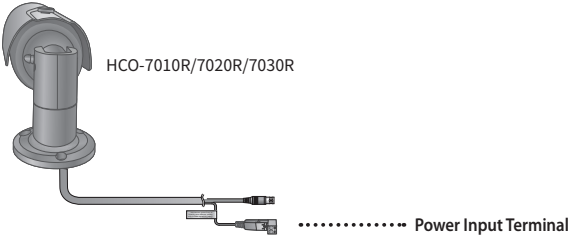

When the resistance value of copper wire is at [20℃(68°F)]

Copper wire size (AWG)	#24 (0.22mm²)	#22 (0.33mm²)	#20 (0.52mm²)	#18 (0.83mm²)
Resistance value(Ω/m)	0.078	0.050	0.030	0.018
Voltage Drop (V/m)	0.028	0.018	0.011	0.006

- As shown in the table above, voltage decreases as the wire gets longer.
  Therefore use of an excessively long adaptor output line for connection to the camera may affect the performance of the camera.

※ Standard voltage for camera operation : DC 12V±10%

※ There may be some deviation in voltage drop depending on the type of wire and the manufacturer.

■ Be sure to connect power only after all the installation is complete.

SEC.RU | Короткий путь к информации
Скачано с sec.ru

USING COAXIAL COMMUNICATIONS

- Coaxial Communications System
- OSD Control method

CAMERA	DVR
SET	MENU/ENTER
UP	UP KEY
DOWN	DOWN KEY
LEFT	LEFT KEY
RIGHT	RIGHT KEY

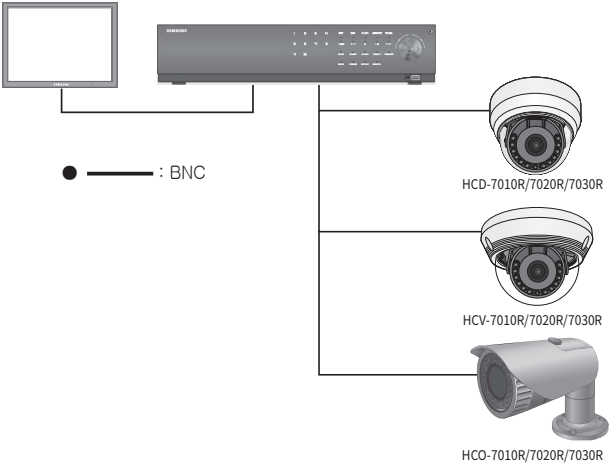

SEC.RU | Короткий путь к информации
Скачано с sec.ru

connection

- Video Cable
  The camera's video output port is connected to the DVR with a BNC coaxial cable, shown below.

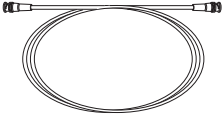

Distance	Recommended Cable Specification
500m	5C2V

- It is recommended that pure copper coax cable is used and not copper coated steel, as this will cause issues with the communication over the coaxial cable.
- To ensure picture quality, only single-channel video output connector can be used while camera connected to other video equipments.

SEC.RU | Короткий путь к информации Скачано с sec.ru

MENU CONFIGURATION

MAIN SETUP			
VIDEO FORMAT	• AHD	• CVBS	
D-WDR	• OFF	• ON	
WHITE BAL	• ATW • MANUAL	• INDOOR • AWC → SET	• OUTDOOR
EXPOSURE	• BRIGHTNESS • DNR	• SHUTTER • RETURN	• AGC
BACKLIGHT	• OFF	• USER BLC	• HLC
SPECIAL	• DISPLAY • DAY/NIGHT • RETURN	• COAX • PRIVACY	• IMAGE ADJ • MOTION
EXIT	• SAVE	• NOT SAVE	• RESET

MENU SETUP

For function setting, you can use the function setting switch inside the cover.

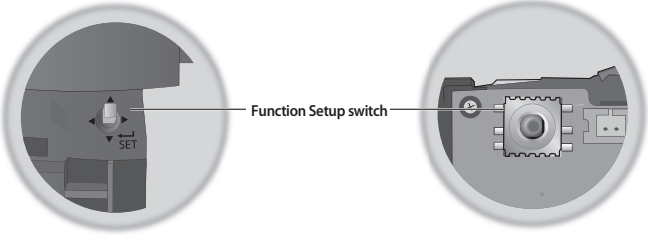

<HCD-70X0R series/HCV-70X0R series>

<HCO-70X0R series>

SEC.RU | Короткий путь к информации
Скачано с sec.ru

camera operation

Select the function using the Function Setup switch.

MAIN SETUP	
▶ 1. VIDEO FORMAT	AHD↵
2. D-WDR	OFF↵
3. WHITE BAL	ATW
4. EXPOSURE	↵
5. BACKLIGHT	OFF
6. SPECIAL	↵
7. EXIT	SAVE

Change the status using the Function Setup switch.

1. Press the Function Setup switch.
   - Main SETUP menu is displayed on the monitor screen.
2. Select a desired function using the Function Setup switch.
   - Place the cursor over a desired item.
3. Set up a selected item by using the Function Setup switch.
4. To finish the setting, select 'EXIT' and press the Function Setup switch.

- An item with the ↵ icon also has sub menus. To select a sub menu, select an item with the icon and press the Function Setup switch.
- An item with the --- icon is unavailable due to function settings.

VIDEO FORMAT

1. When the SETUP menu screen is displayed, select 'VIDEO FORMAT' by using the Function Setup switch so that the arrow indicates 'VIDEO FORMAT'.
2. Select a desired mode using the Function Setup switch.
   - The video output can be selected from AHD/CVBS.

MAIN SETUP	
▶ 1. VIDEO FORMAT	AHD↵
2. D-WDR	OFF↵
3. WHITE BAL	ATW
4. EXPOSURE	↵
5. BACKLIGHT	OFF
6. SPECIAL	↵
7. EXIT	SAVE

- By pressing the function setting button for more than 5 seconds, you can change the setting from AHD to CVBS. From CVBS, you can change it to AHD.

SEC.RU | Короткий путь к информации Скачано с sec.ru

D-WDR

If an object has a large variance between bright and dark areas, it will keep bright areas bright and make selected dark areas bright, so that the overall brightness can be maintained.

1. When the SETUP menu screen is displayed, select 'D-WDR' by using the Function Setup switch so that the arrow indicates 'D-WDR'.
2. Use the Function Setup switch to change the D-WDR level in the sub menu according to the contrast between bright and dark areas.

MAIN SETUP	
1. VIDEO FORMAT	AHD↵
▶ 2. D-WDR	OFF↵
3. WHITE BAL	ATW
4. EXPOSURE	↵
5. BACKLIGHT	OFF
6. SPECIAL	↵
7. EXIT	SAVE

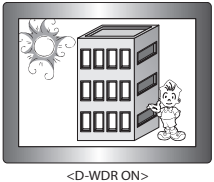

<D-WDR ON>

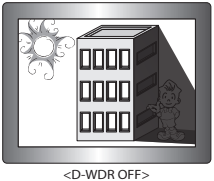

<D-WDR OFF>

White Bal (White Balance)

Use the White Balance function to adjust the screen color.

1. When the SETUP menu screen is displayed, select 'White Bal' by using the Function Setup switch so that the arrow indicates 'White Bal'.
2. Select a desired mode using the Function Setup switch.

MAIN SETUP	
1. VIDEO FORMAT	AHD↵
2. D-WDR	OFF↵
▶ 3. WHITE BAL	ATW

※ Select one of the following 5 modes, as appropriate for your purpose.

- **ATW :** Select this when the color temperature is between 1,800K and 10,500K.
- **OUTDOOR :** Use it in a color temperature range of 1,800K to 10,500K.(including Natrium). Auto adjustment is made to optimize the camera color to the outdoor environment.

SEC.RU | Короткий путь к информации
Скачано с sec.ru

- **INDOOR :** Select this when the color temperature is between 4,500K and 8,500K. Automatically adjusts the camera color for optimization to the indoor environment.
- **MANUAL :** Select this to fine-tune White Balance manually. Set White Balance first by using the ATW or AWC mode. After that button to MANUAL mode, fine-tune the White Balance and the Function Setup switch.

```
WB MANUAL
▶ 1. RED GAIN        147
  2. BLUE GAIN       124
  3. RETURN
```

- **AWC→SET :** To find the optimal luminance level for the current environment, point the camera towards a sheet of white paper and press the Function Setup switch. If the environment changes, readjust it.

- White Balance may not work properly under the following conditions. In this case select the AWC mode.
  1. Select this When the color temperature of environment surrounding the subject is out of the control range (e.g. clear sky, or sunset)
  2. When the ambient illumination of the subject is dim.
- If the camera is directed towards a fluorescent light or is installed in a place where illumination changes dramatically, the White Balance operation may become unstable.

EXPOSURE

1. When the SETUP menu screen is displayed, select 'EXPOSURE' by using the Function Setup switch so that the arrow indicates 'EXPOSURE'.
2. Select a desired mode using the Function Setup switch.

- **BRIGHTNESS :** Adjusts the video brightness.
- **SHUTTER :** You can select the shutter.
  - MIN : 1/30 ~ 1/12000
  - MAX : 1/60 ~ 1/12000(NTSC) , 1/50 ~ 1/12000(PAL)
  - A.FLK : Select this when you experience picture flicker, this happen when there is a clash with the installed lighting frequency.

```
EXPOSURE SETUP
▶ 1. BRIGHTNESS      50
  2. SHUTTER
  3. AGC             HIGH
  4. DNR             ON
  5. RETURN
```

SEC.RU | Короткий путь к информации Скачано с sec.ru

- The greater the shutter value the brighter the screen is but the more the residual images of objects there are.
- If the min shutter value is large, it can cause noise, spots and white areas but still operate normally.
- If you do not use the AGC mode on the exposure menu, it cannot be set above 1/60sec.
- Depending on the setting range of the minimal/maximal shutter, the screen exposure can become saturated.

- **AGC (OFF/LOW/MIDDLE/HIGH/VERY HIGH) :**
  The higher the gain level, the brighter the screen - but the greater the noise.

- **DNR :** This is a method of reducing the noise. If you increase the level, the noise will be reduced but the video may be blurred.
  - OFF : Deactivates DNR. Noise is not reduced.
  - ON : Activates DNR so that noise is reduced.

BACKLIGHT

The camera uses high performance DSP chips that are designed to clearly display the object and the background despite severe reverse light.

1. When the SETUP menu screen is displayed, select 'BACKLIGHT' by using the Function Setup switch. so that the arrow indicates 'BACKLIGHT'.
2. Select a desired mode using the Function Setup switch depending on the camera purpose.

- **USER BLC :**
  Enables a user to select a desired area on a picture and view that area more clearly.
  - LEVEL : Adjusts the brightness level of a monitoring area.
  - TOP/BOTTOM/LEFT/RIGHT : Adjust the area to be enhanced.
  - RETURN : Return to the MAIN SETUP menu.

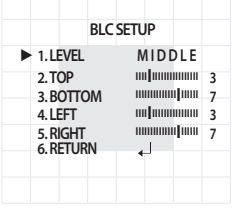

camera operation

- **HLC (High Light Compensation) :**
  This function masks the strong light to minimize white out due to over exposure and preserve much of the on-screen details when the camera aims a strong light source.
  - LEVEL : Adjusts the brightness level of a monitoring area.
  - LIMIT : Enable to change the operating condition.
  - TOP/BOTTOM/LEFT/RIGHT : Adjust the area to be enhanced.
  - RETURN : Return to the MAIN SETUP menu.

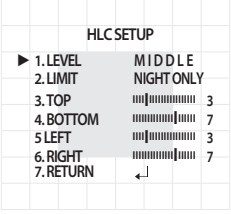

- If the white balance menu is set to manual, then HLC performance can be limited.
- Because there can be a difference in the effectiveness of HLC according to the amount of light area in the screen, optimize the installation angle for the best HLC performance.
- When dark, the HLC is only activated when a bright light exceeding a specifi c size. (In NIGHT ONLY mode).
- The HLC is not activated in day light or when bright light is not present at night. (In NIGHT ONLY mode).

SEC.RU | Короткий путь к информации
Скачано с sec.ru

SPECIAL

1. When the SETUP menu screen is displayed, select 'SPECIAL' by using the Function Setup switch so that the arrow indicates 'SPECIAL'.
2. Select a desired mode using the Function Setup switch.

MAIN SETUP	
1. VIDEO FORMAT	AHD
2. D-WDR	OFF
3. WHITE BAL	ATW
4. EXPOSURE	
5. BACKLIGHT	OFF
▶ 6. SPECIAL	
7. EXIT	SAVE

- **DISPLAY**

❶ If the SPECIAL menu screen is displayed, use the Function Setup switch so that the arrow indicates 'DISPLAY'.

❷ Select a desired mode using the Function Setup switch.

- FONT COLOR : You can change the OSD font color. (White, Yellow, Green, Red, Blue)
- LANGUAGE : You can select the menu language according to your requirements.
- RETURN : Return to the SPECIAL menu.

- **COAX :** You can select whether to use COAX communication.

- **IMAGE ADJ**

❶ If the SPECIAL menu screen is displayed, use the Function Setup switch so that the arrow indicates 'IMAGE ADJ'.

❷ Select a desired mode using the Function Setup switch.

IMAGE SETUP	
▶ 1. GAMMA	USER
2. PED LEVEL	5
3. COLOR GAIN	50
4. H-REV	OFF
5. V-REV	OFF
6. SHARPNESS	ON
7. RETURN	

- GAMMA : The setting range is 0.35 ~ 1.0. The closer to 1.0 the setting is, the darker it gets.
- PED LEVEL : The setting range is 1 ~ 100. The closer to 100 the setting is, the higher the PED level gets.
- COLOR GAIN : The setting range is 1 ~ 100. The smaller the setting value is the smaller the color gain gets and the more color blind it gets.
- H-REV : Flip an image horizontally.
- V-REV : Flip an image vertically.

SEC.RU | Короткий путь к информации
Скачано с sec.ru

- SHARPNESS : Select a mode to adjust the thickness of an image's sharpness.
  Increase or decrease the level of each mode to adjust the level of sharpness.
  - OFF : Released state
  - ON : The setting range is 1 ~ 32.
- RETURN : Return to the SPECIAL menu.

- When the V-REV or H-REV mode is enabled, the text on the screen does not flip.
- If you increase the SHARPNESS level too high, the picture may become distorted or noise may appear.

- **DAY/NIGHT:** You can display pictures in color or in black and white.

❶ If the SPECIAL menu screen is displayed, use the Function Setup switch so that the arrow indicates 'DAY/NIGHT'.

❷ Select a desired mode using the Function Setup switch according to the picture display you want.

- **AUTO :** The mode is switched to 'Color' in a normal environment, but switches to 'B/W' mode when ambient illumination is low. To set up the switching time for AUTO mode, press the Function Setup switch. You can turn on or off the burst signal on B/W mode.

AUTO SETUP	
▶ 1. BURST MODE	ON
2. DURATION	NORMAL
3. DWELL TIME	30 SEC
4. RETURN	↵

  - BURST MODE : Activate or deactivate the burst mode to maintain or remove the color signal.
  - DURATION : This function is used to select the brightness of light where switching occurs.
  - DWELL TIME : You can select day/night switching delay time from.
    → 3s, 5s, 7s, 10s, 15s, 20s, 30s, 40s, 60s

- If you set the AGC mode to off on the exposure menu, you cannot switch the day/night mode to auto.
- When a bright light source is in the screen or there are frequent brightness changes, if you use the auto night/day mode, and set the switching time to short (3, 5 sec), a hunting can be caused. In this situation, it is recommended to use the default setting (30 sec).

SEC.RU | Короткий путь к информации Скачано с sec.ru

- COLOR : The picture is always displayed in color.
- B/W : The picture is always displayed in black and white.
  You can turn on or off the burst signal on B/W mode.

- If the lens mounted in the camera is different from the one set in <LENS> of the <EXPOSURE> menu, then the night/day mode may not operate normally.

- **PRIVACY:** Mask an area you want to hide on the screen.

❶ If the SPECIAL menu screen is displayed, use the Function Setup switch so that the arrow indicates 'PRIVACY'.

❷ Select a desired mode using the Function Setup switch.

PRIVACY AREA	
▶ 1. AREA	AREA1
2. MODE	OFF
3. MASK COLOR	GREEN
4. TRANSPARENCY	OFF
5. V POSITION	25
6. HEIGHT	50
7. H POSITION	10
8. WIDTH	30
9. RETURN	↵

- AREA : You can select up to 8 PRIVACY areas.
- MODE : Determines whether to use the area selected in the AREA.
- MASK COLOR : Determine area color. You can select Green, Yellow, Red, Blue, Black, White, Gray.
- TRANSPARENCY : Adds or removes transparency from the masking area.
- V POSITION/HEIGHT/H POSITION/WIDTH : Adjust the size and position of the selected area.
- RETURN : Return to the SPECIAL menu.

- **MOTION :**
  This product generates signals each time an object movement is detected in the four areas of the screen so efficient monitoring can be achieved.

❶ If the SPECIAL menu screen is displayed, use the Function Setup switch so that the arrow indicates 'MOTION'.

❷ Select a desired mode using the Function Setup switch.

MOTION DET	
▶ 1. DET. AREA	↵
2. SENSITIVITY	5
3. RETURN	↵

- DET. AREA : Set the areas of motion detection.
  - SEL AREA : Select from four areas that users want.
  - MODE : Determine whether to use the selected area.

SEC.RU | Короткий путь к информации
Скачано с sec.ru

- MASK : Under Motion Detection, If you don't want to see mosaic image on the screen, you may turn MASK OFF.
  If you wants to see mosaic image, please turn it on.
- TRANSPARENCY: Adds or removes transparency from the masking area.
- TOP/BOTTOM/LEFT/RIGHT : Area location can be adjusted.
- RETURN : Return to the MOTION DET menu.

- SENSITIVITY : Set the sensitivity of the motion detection. When you adjust the higher level, the more sensitive.

- RETURN : Return to the SPECIAL SETUP menu.

- Depending on the shape of an object, there can be errors in size detection.
- If the camera shoots an object a short distance away, the motion detection function can be degraded.
- In the following cases, motion detection event performance can be degraded or malfunctions can occur.
  - If an object's brightness or color is similar to that of the background
  - If there is little movement near the screen edge
  - If multiple movements keeps occurring randomly, such as scene switching or sudden light changes
  - If an object fixed in the same location keeps moving
  - Moving away from the camera or approaching the camera. Little location change on the screen.
  - If a moving object approaches the camera
  - If random objects obstruct the view of each other
  - If more than one objects merge or one object divides into multiple objects
  - If an object moves too fast (the same object should have overlapping areas between the consecutive frames)
  - If there are reflections/blurs/shadows created by a strong light such as direct sunlight, lights, and headlights.
  - Severe snow, rain and wind. Sunset or sunrise
  - If the size is greater than the max size or smaller than the min size, motion is not detected. To avoid false detection caused by noises, set the max/min detection size suitable for the installation environment.
    But the same movement in the same location can cause a different detection size. So, include margins when you set the min/max detection size.

SEC.RU | Короткий путь к информации Скачано с sec.ru

EXIT

Select a desired EXIT mode using the Function Setup switch depending on the camera purpose.

- **SAVE :** Save the current settings and exit the MAIN SETUP menu.
- **NOT SAVE :** Do not save the current settings and exit the MAIN SETUP menu.
- **RESET :** Revert camera to factory settings. (The language, communication and lens settings will remain the same).

SEC.RU | Короткий путь к информации
Скачано с sec.ru

TROUBLESHOOTING

If you have trouble operating your camera, refer to the following table.
If the guidelines do not enable you to solve the problem, contact an authorized technician.

Problems	Troubleshooting
Nothing appears on the screen.	• Check that the power cord and line connection between the camera and monitor are properly connected. • Check that you have properly connected BNC cable to the camera. • Check the type of lens.
The image on the screen is dim.	• Is lens stained with dirt? Clean your lens with soft, clean cloth. • Set the monitor or DVR to the proper condition. • If the camera is exposed to very strong light, change the camera position.
The image on the screen is dark.	• Adjust the contrast feature of the monitor or DVR. • If you have an intermediate device, set the 75Ω / Hi-z properly.
The camera is not working properly, and the surface of the camera is hot.	• Check that you have properly connected the camera to an appropriate power source.
he DAY/NIGHT menu does not work.	• Check that AGC of EXPOSURE SETUP menu is 'OFF'.
Color is not correct.	• Check the setting of WHITE BAL SETUP menu
The screen flickers continually.	• Ensure the camera is not pointing towards the sun.

SEC.RU | Короткий путь к информации
Скачано с sec.ru

SPECIFICATIONS (HCD-7010R/7020R/7030R)

	HCD-7010RN/ HCD-7010RP	HCD-7020RN/ HCD-7020RP	HCD-7030RN/ HCD-7030RP
Video			
Imaging Device	1/3" 4M CMOS		
Total Pixels	2720(H) x 1536(V)		
Effective Pixels	2688(H) x 1520(V)		
Scanning System	Progressive Scan		
Min. Illumination	Color : 0.26Lux (F1.8, 1/30sec) B/W : 0Lux(IR LED on)	Color : 0.27Lux (F2.0, 1/30sec) B/W : 0Lux(IR LED on)	Color : 0.27Lux (F2.0, 1/30sec) B/W : 0Lux(IR LED on)
S / N Ratio	52dB (AGC off, Weight on)		
Video Output	BNC(AHD), additional CVBS for installation(2Pin connector type)		
Resolution	2560x1440		
Max, Framerate	30fps @ 4M(N), 25fps @ 4M(P)		
Pan / Tilt / Rotate			
Pan / Tilt / Rotate Range	0˚~350˚ / 0˚~67˚ / 0˚~355˚		
Lens Type			
Focal Length (Zoom Ratio)	2.8mm fixed	4.0mm fixed	6mm fixed
Max. Aperture Ratio	F1.8	F2.0	F2.0
Angular Field of View	H : 107.48° V : 59.67° D : 122.01°	H : 78.22° V : 41.21° D : 87.91°	H : 49.01° V : 27.61° D : 55.6°
Min. Object Distance	0.5m (1.64ft)		
Focus Control	-		
Lens Type	Fixed Lens		
Mount Type	Board-in type		
Operational			
On Screen Display	English, Spanish, French, Portuguese, German, Italian, Russian, Polish, Czech, Romanian, Serbian, Swedish, Danish, Turkish		
Day & Night	Auto (ICR) / Color / B/W		
Backlight Compensation	Off / User BLC / HLn		
Wide Dynamic Range	D-WDR (Off/On)		
Digital Noise Reduction	2D DNR		
Motion Detection	Off / On(4 zones)		
Privacy Masking	Off / On (2 zones rectangle)		
Gain Control	Off / Low / Middle / High / Very High		

SEC.RU | Короткий путь к информации
Скачано с sec.ru

specifications

	HCD-7010RN/ HCD-7010RP	HCD-7020RN/ HCD-7020RP	HCD-7030RN/ HCD-7030RP
White Balance	ATW / Outdoor / Indoor(4,500K° ~ 8,500K°) / Manual / AWC (1,800K° ~ 10,500K°)		
Electronic Shutter Speed	1/30 sec ~ 1/12,000 sec(N), 1/25sec~ 1/12,000sec(P)		
Reverse	Off / H-Rev / V-Rev		
Remote control interface	Coaxial		
Protocol	AHD : ACP (AHD Coax Protocol), CVBS : Pelco-C (Coaxitron)		
IR Distance	20m(65.62ft)	25m (82.02ft)	30m (98.43ft)
Video Transmission Distance	500m(5C2V)		
Environmental			
Operating Temperature / Humidity	-10°C ~ +55°C (+14°F ~ +131°F) / Less than 90% RH		
Electrical			
Input Voltage	12V DC ±10%/410mA		
Power Consumption	MAX.5W		
Mechanical			
Color / Material	Ivory / Plastic		
Dimension (HxØ)	Ø110.1 x 86.1mm		
Weight	240g		

※ The specification for this product may change without prior notice for product improvement.

SEC.RU | Короткий путь к информации
Скачано с sec.ru

SPECIFICATIONS (HCV-7010R/7020R/7030R)

	HCV-7010RN/ HCV-7010RP	HCV-7020RN/ HCV-7020RP	HCV-7030RN/ HCV-7030RP
Video			
Imaging Device	1/3" 4M CMOS		
Total Pixels	2720(H) x 1536(V)		
Effective Pixels	2688(H) x 1520(V)		
Scanning System	Progressive Scan		
Min. Illumination	Color : 0.26Lux (F1.8, 1/30sec) B/W : 0Lux(IR LED on)	Color : 0.27Lux (F2.0, 1/30sec) B/W : 0Lux(IR LED on)	Color : 0.27Lux (F2.0, 1/30sec) B/W : 0Lux(IR LED on)
S / N Ratio	52dB (AGC off, Weight on)		
Video Output	BNC(AHD), additional CVBS for installation(2Pin connector type)		
Resolution	2560x1440		
Max, Framerate	30fps @ 4M(N), 25fps @ 4M(P)		
Pan / Tilt / Rotate			
Pan / Tilt / Rotate Range	0˚~350˚ / 0˚~67˚ / 0˚~355˚		
Lens Type			
Focal Length (Zoom Ratio)	2.8mm fixed	4.0mm fixed	6mm fixed
Max. Aperture Ratio	F1.8	F2.0	F2.0
Angular Field of View	H : 107.48° V : 59.67° D : 122.01°	H : 78.22° V : 41.21° D : 87.91°	H : 49.01° V : 27.61° D : 55.6°
Min. Object Distance	0.5m (1.64ft)		
Focus Control	-		
Lens Type	Fixed Lens		
Mount Type	Board-in type		
Operational			
On Screen Display	English, Spanish, French, Portuguese, German, Italian, Russian, Polish, Czech, Romanian, Serbian, Swedish, Danish, Turkish		
Day & Night	Auto (ICR) / Color / B/W		
Backlight Compensation	Off / User BLC / HLC		
Wide Dynamic Range	D-WDR (Off/On)		
Digital Noise Reduction	2D DNR		
Motion Detection	Off / On(4 zones)		
Privacy Masking	Off / On (2 zones rectangle)		
Gain Control	Off / Low / Middle / High / Very High		

SEC.RU | Короткий путь к информации
Скачано с sec.ru

specifications

	HCV-7010RN/ HCV-7010RP	HCV-7020RN/ HCV-7020RP	HCV-7030RN/ HCV-7030RP
White Balance	ATW / Outdoor / Indoor(4,500K° ~ 8,500K°) / Manual / AWC (1,800K° ~ 10,500K°)		
Electronic Shutter Speed	1/30 sec ~ 1/12,000 sec(N), 1/25sec~ 1/12,000sec(P)		
Reverse	Off / H-Rev / V-Rev		
Remote control interface	Coaxial		
Protocol	AHD : ACP (AHD Coax Protocol), CVBS : Pelco-C (Coaxitron)		
IR Distance	20m(65.62ft)	25(82.02ft)	30m(98.43ft)
Video Transmission Distance	500m(5C2V)		
Environmental			
Operating Temperature / Humidity	-30°C ~ +55°C (-22°F ~ +131°F) / Less than 90% RH * Start up should be done at above -10°C		
Ingress Protection	IP66		
Vandal Resistance	IK10		
Electrical			
Input Voltage	12V DC ±10%/410mA		
Power Consumption	MAX.5W		
Mechanical			
Color / Material	Ivory / Aluminum		
Dimension (HxØ)	Ø120.3 x 91.7mm		
Weight	510g		

※ The specification for this product may change without prior notice for product improvement.

SEC.RU | Короткий путь к информации
Скачано с sec.ru

SPECIFICATIONS (HCO-7010R/7020R/7030R)

	HCO-7010RN/ HCO-7010RP	HCO-7020RN/ HCO-7020RP	HCO-7030RN/ HCO-7030RP
Video			
Imaging Device	1/3" 4M CMOS		
Total Pixels	2720(H) x 1536(V)		
Effective Pixels	2688(H) x 1520(V)		
Scanning System	Progressive Scan		
Min. Illumination	Color : 0.26Lux (F1.8, 1/30sec) B/W : 0Lux(IR LED on)	Color : 0.27Lux (F2.0, 1/30sec) B/W : 0Lux(IR LED on)	Color : 0.27Lux (F2.0, 1/30sec) B/W : 0Lux(IR LED on)
S / N Ratio	52dB (AGC off, Weight on)		
Video Output	BNC(AHD), additional CVBS for installation(2Pin connector type)		
Resolution	2560x1440		
Max, Framerate	30fps @ 4M(N), 25fps @ 4M(P)		
Lens Type			
Focal Length (Zoom Ratio)	2.8mm fixed	4.0mm fixed	6mm fixed
Max. Aperture Ratio	F1.8	F2.0	F2.0
Angular Field of View	H : 107.48° V : 59.67° D : 122.01°	H : 78.22° V : 41.21° D : 87.91°	H : 49.01° V : 27.61° D : 55.6°
Min. Object Distance	0.5m (1.64ft)		
Focus Control	-		
Lens Type	Fixed Lens		
Mount Type	Board-in type		
Operational			
On Screen Display	English, Spanish, French, Portuguese, German, Italian, Russian, Polish, Czech, Romanian, Serbian, Swedish, Danish, Turkish		
Day & Night	Auto (ICR) / Color / B/W		
Backlight Compensation	Off / User BLC / HLC		
Wide Dynamic Range	D-WDR (Off/On)		
Digital Noise Reduction	2D DNR		
Motion Detection	Off / On(4 zones)		
Privacy Masking	Off / On (2 zones rectangle)		
Gain Control	Off / Low / Middle / High / Very High		
White Balance	ATW / Outdoor / Indoor(4,500K° ~ 8,500K°) / Manual / AWC (1,800K° ~ 10,500K°)		
Electronic Shutter Speed	1/30 sec ~ 1/12,000 sec(N), 1/25sec~ 1/12,000sec(P)		

SEC.RU | Короткий путь к информации
Скачано с sec.ru

specifications

	HCO-7010RN/ HCO-7010RP	HCO-7020RN/ HCO-7020RP	HCO-7030RN/ HCO-7030RP
Reverse	Off / H-Rev / V-Rev		
Remote control interface	Coaxial		
Protocol	AHD : ACP (AHD Coax Protocol), CVBS : Pelco-C (Coaxitron)		
IR Distance	20m(65.62ft)	25(82.02ft)	30m(98.43ft)
Video Transmission Distance	500m(5C2V)		
Environmental			
Operating Temperature / Humidity	-30°C ~ +55°C (-22°F ~ +131°F) / Less than 90% RH * Start up should be done at above -10°C		
Ingress Protection	IP66		
Vandal Resistance	IK10		
Electrical			
Input Voltage	12V DC ±10%/410mA		
Power Consumption	MAX.5W		
Mechanical			
Color / Material	Dark Gray / Aluminum		
Dimension (HxØ)	Φ70.0 x 246 mm(Without sunshield)		
Weight	670g		

※ The specification for this product may change without prior notice for product improvement.

SEC.RU | Короткий путь к информации
Скачано с sec.ru

DIMENSION

Unit: mm (inch)

<HCD-7010R/7020R/7030R>

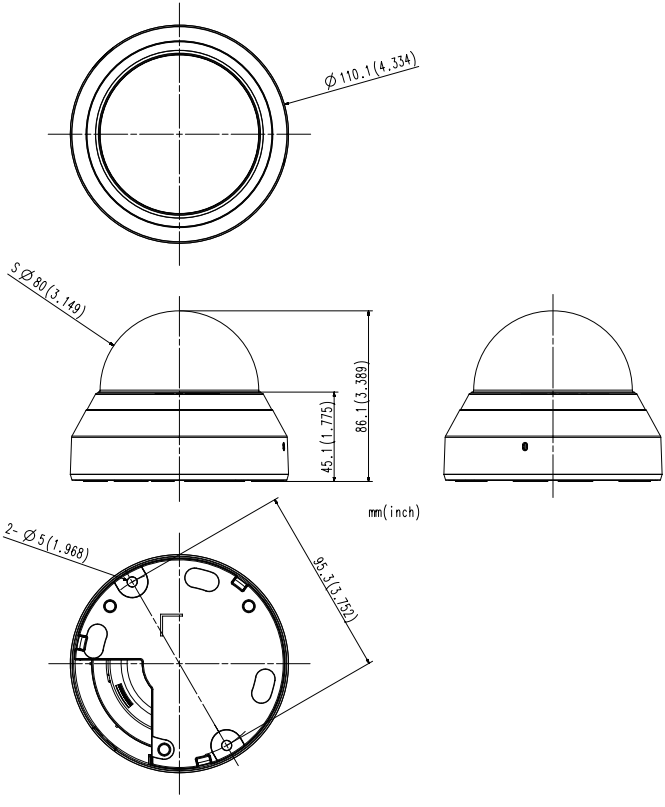

Скачано с sec.ru

Unit: mm (inch)

<HCV-7010R/7020R/7030R>

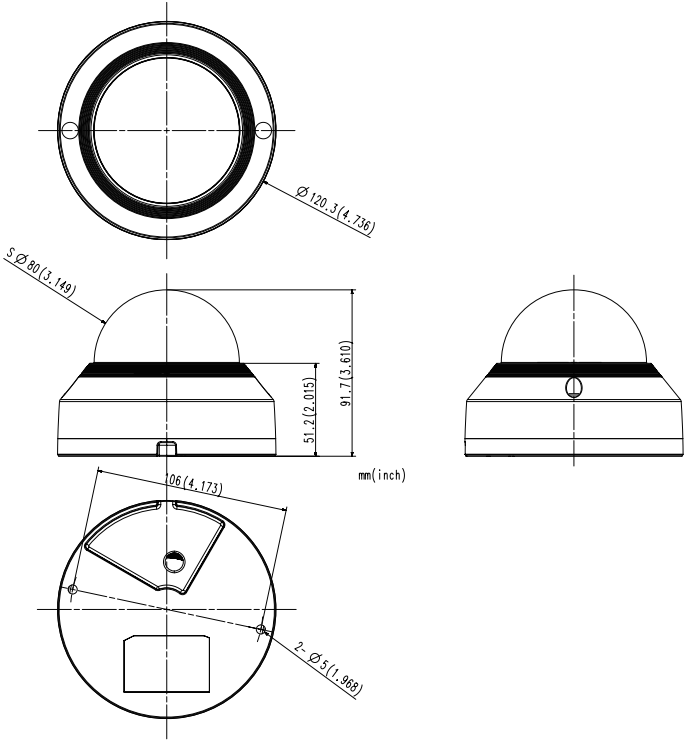

SEC.RU | Короткий путь к информации
Скачано с sec.ru

Unit: mm (inch)

<HCO-7010R/7020R/7030R>

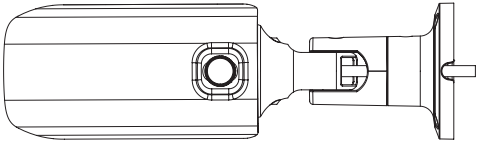

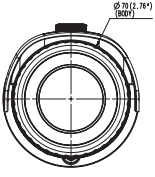

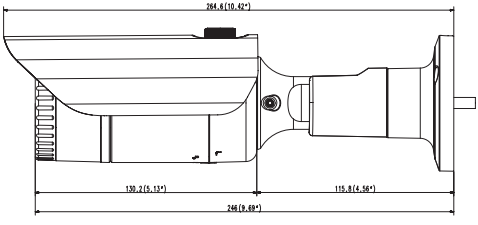

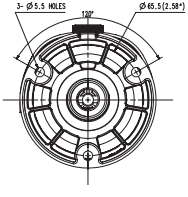

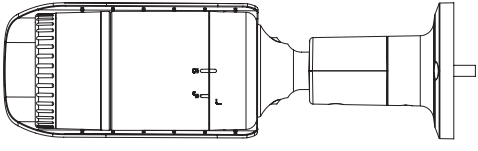

Скачано с sec.ru

Head Office
6, Pangyo-ro 319 beon-gil, Bundang-gu, Seongnam-si,
Gyeonggi-do, 463-400 Rep. of KOREA
Tel : +82.70.7147.8753 Fax : +82.31.8018.3740
www.hanwha-security.com

Hanwha Techwin America
500 Frank W. Burr Blvd. Suite 43 Teaneck, NJ 07666
Toll Free +1.877.213.1222 Direct +1.201.325.6920
Fax +1.201.373.0124
www.hanwha-security.com

Hanwha Techwin Europe
Heriot House, Heriot Road, Chertsey, Surrey, KT16 9DT, United Kingdom
Tel +44.1932.57.8100 Fax +44.1932.57.8101
www.hanwha-security.eu

Hanwha Techwin

SEC.RU | Короткий путь к информации
Скачано с sec.ru