РУКОВОДСТВО ПО ЭКСПЛУАТАЦИИ (EN)

ИСТОЧНИК БЕСПЕРЕБОЙНОГО ПИТАНИЯ

СЕРИИ MPXL

SNR-UPS-ONRT-6-MPXL31
SNR-UPS-ONRT-10-MPXL31

SEC.RU | Короткий путь к информации
Скачано с sec.ru

1. Safety

Important safety instructions – Save these instructions

There exists dangerous voltage and high temperature inside the UPS. During the installation, operation and maintenance, please abide the local safety instructions and relative laws, otherwise it will result in personnel injury or equipment damage. Safety instructions in this manual act as a supplementary for the local safety instructions. Our company will not assume the liability that caused by disobeying local safety instructions。

1.1 Safety notes

1. Even no connection with utility power, 220/230/240VAC voltage may still exist at UPS outlet!
2. For the sake of human being safety, please well earth the UPS before starting it .
3. Don't open or damage battery, for the liquid spilled from the battery is strongly poisonous and do harmful to body!
4. Please avoid short circuit between anode and cathode of battery, otherwise, it will cause spark or fire!
5. Don't disassemble the UPS cover, or there may be an electric shock!
6. Check if there exists high voltage before touching the battery
7. Working environment and storage way will affect the lifetime and reliability of the UPS. Avoid the UPS from working under following environment for long time
   - Area where the humidity and temperature is out of the specified range(temperature 0 to 40℃, relative humidity 5%-95%)
   - Direct sunlight or location nearby heat
   - Vibration Area with possibility to get the UPS crashed.
   - Area with erosive gas, flammable gas, excessive dust, etc
8. Keep ventilations in good conditions otherwise the components inside the UPS will be over-heated which may affect the life of the UPS.

1.2 Symbols used in this guide

WARNING!
Risk of electric shock

CAUTION!
Read this information to avoid equipment damage

SEC.RU | Короткий путь к информации Скачано с sec.ru

2. Main Features

2.1 Summarization

This series UPS is a kind of three-in- single -out high frequency online UPS. The products are modularized and adopt the N+X redundancy. It can flexibly increase the number of the UPS modules according to the load capacity which is convenient for flexible allocation and gradually investment.

The UPS can solve most of the power supply problems, such as blackout, over-voltage, under-voltage, voltage sudden drop, oscillating of decreasing extent, high voltage pulse, voltage fluctuation, surge, inrush current, harmonic distortion (THD), noise interference, frequency fluctuation, etc..

This UPS can be applied to different applications from computer device, automatic equipment, communication system to industry equipment.

2.2 Functions and Features

◆ Digital Control

This series UPS is controlled by Digital Signal Processor(DSP); ehance, it increases reliability, performance, self-protection, self-diagnostics and so on.

◆ Modular Design

◆ Battery Configurable from 16 blocks to 20 blocks

The battery voltage of this series UPS can be configured at 16blocks, 18 blocks or 20 blocks according to your convenience.

◆ Charging Current is configurable

Via setting tool, the user may set the capacity of the batteries as well as reasonable charging current as well as maximum charging current. Constant voltage mode, constant current mode or floating mode can be switched automatically and smoothly.

◆ Intelligent Charging Method

The series UPS adopts advanced three-stage charging method–

1st stage: high current constant current charging

to guarantee to charge back to 90%;

2nd-stage: Constant Voltage

In order to vitalize battery and make sure batteries are fully charged

3rd stage: floating mode.

With this 3-stage charging method, it extends the life of the batteries and guarantees fast charging.

◆ LCD Display

With LCD plus LED displays, the user may easily get UPS status and its operational parameters, such as input/output voltage, frequency & load%, battery % and ambient temperature, etc..

◆ Intelligent Monitoring Function

Via optional SNMP Card, you may remotely control and monitor the UPS.

◆ EPO Function

The series UPS may be completely shut off when the EPO is pressed. EPO function(Remote EPO) is also available in this series UPS.

SEC.RU | Короткий путь к информации Скачано с sec.ru

3. Installation

3.1 Unpack checking

1. Don't lean the UPS when moving it out from the packaging
2. Check the appearance to see if the UPS is damaged or not during the transportation, do not switch on the UPS if any damage found. Please contact the dealer right away.
3. Check the accessories according to the packing list and contact the dealer in case of missing parts.

3.2 UPS Module Outlook

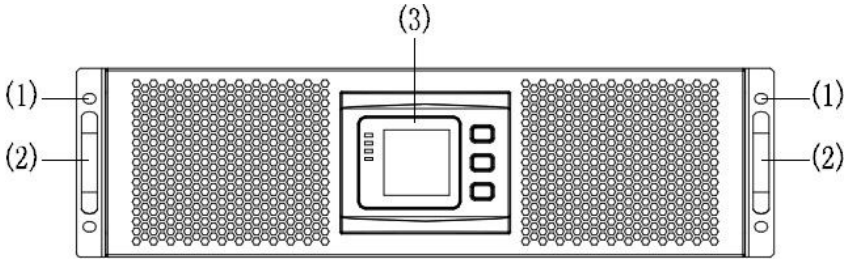

Front View

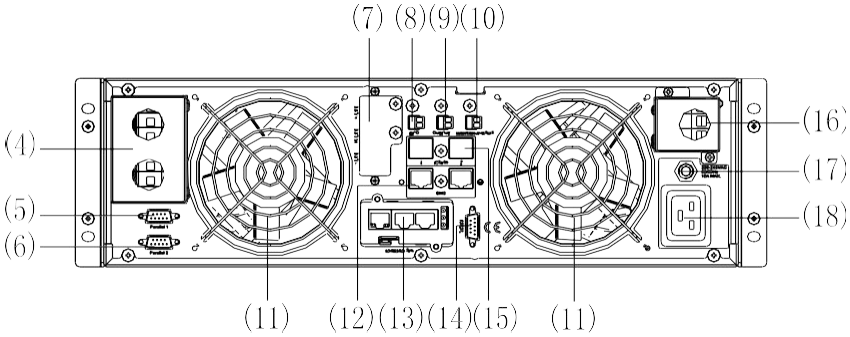

Rear View

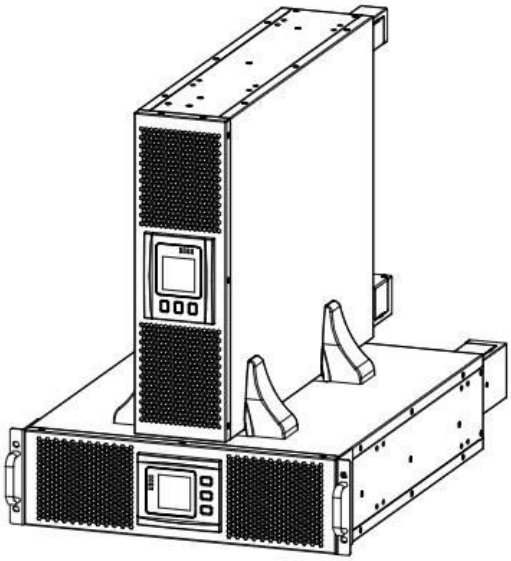

Side View

(1) Fixing screw hole (2) Handles (3)LCD Display (4)Input Terminal (5) Parallel Port 1 (6) Parallel Port 2 port (7) Battery Terminal (8) EPO port (9) Output port (10) MAINTAIN-AUXSWS (11) Fan (12) BMS (optional) (13) Intelligent Slot (SNMP card/ Relay card) (14) RS232 port (15)RS485 (16) Output Terminal (17) Output circuit breaker(16A) (18) Output(16A)

SEC.RU | Короткий путь к информации Скачано с sec.ru

3.3 PDU Module Outlook (Optional Part)

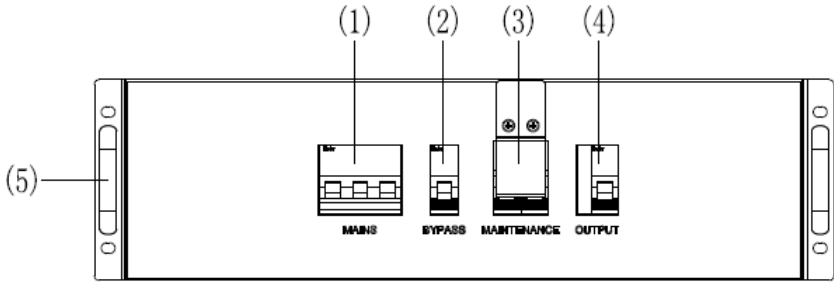

Front View

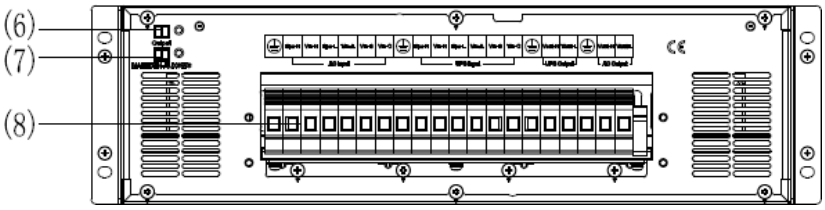

Rear View

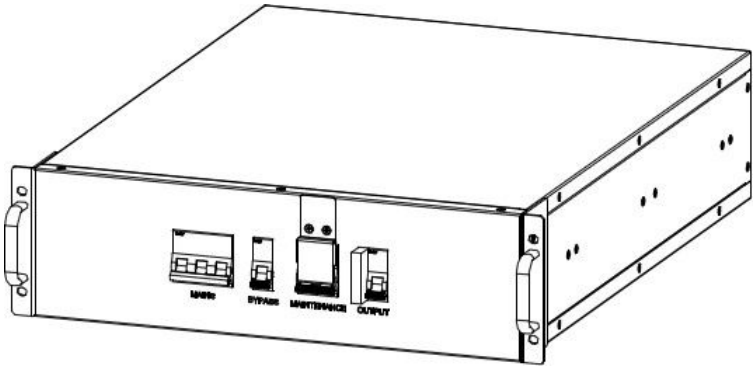

Side View

(1)Mains Breaker (2)Bypass Breaker (3)Maintenance Breaker (4)Output Breaker (5)handles
(6) Output(to UPS Output) (7) MAINTAIN-AUXSWS(to UPS MAINTAIN-AUXSWS)
(8)Input/ Output Terminal

3.4 LCD control panel

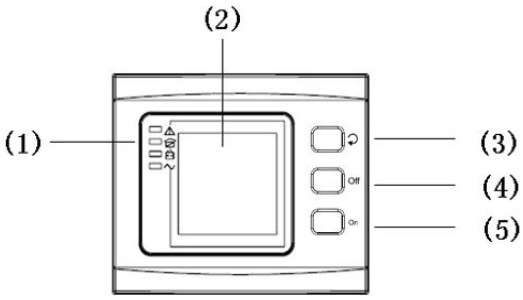

LCD control panel introduction

（1）LED（from top to bottom: ¯alarm‖, ¯bypass‖, ¯battery‖, ¯inverter‖） （2）LCD display （3）scroll button （4）Off button （5）On button(battery cold start switch)

Note：ROTATE key (↻)

“↻” button for 10 seconds to realize LCD rotate

SEC.RU | Короткий путь к информации Скачано с sec.ru

3.5 Installation notes

◆Please place the UPS in a clean, stable environment, avoid the vibration, dust, humidity, flammable gas and liquid, corrosive objects. To avoid from high room temperature, a system of room extractor fans is recommended to be installed. Optional air filters are available if the UPS operates in a dusty environment.

◆The environment temperature around the UPS should keep in a range of 0℃～40℃. If the environment temperature exceeds 40℃, the rated load capacity should be reduced by 12％ per 5℃. The max temperature can't be higher than 50℃.

◆If the UPS is dismantled under low temperature, it might be in a condensing condition.The UPS can't be installed unless the internal and external of the equipment is fully dry. Otherwise, there will be in danger of electric shock.

◆Batteries should be mounted in an environment where the temperature is within the required specs. Temperature is a major factor in determining battery life and capacity. In a normal installation, the battery temperature is maintained between 15°C and 25°C. Keep batteries away from heat sources or main air ventilation area, etc.

WARNING!

Typical battery performance data are quoted for an operating temperature between 20°C and 25°C. Operating it above this range will reduce the battery life while operation below this range will reduce the battery capacity.

◆Should the equipment not be installed immediately it must be stored in a room so as to protect it against excessive humidity and or heat sources。

CAUTION!

An unused battery must be recharged every 6months. Temporarily connecting the UPS to a suitable AC supply and activating it for the time required for recharging the batteries are required.

◆The highest altitude that UPS may work normally with full load is 1500 meters. The load capacity should be reduced when this UPS is installed in place whose altitude is higher than 1500 meters, shown as the following table:

（Load coefficient equals max load in high altitude place divided by nominal power of the UPS）

Altitude（m）	1500	2000	2500	3000	3500	4000	4500	5000
Load coefficient	100%	95%	90%	85%	80%	75%	70%	65%

◆To get the UPS completely monitored by the software, you just simply connect RS232 cable to each end of the computer and the UPS respectively.

3.6 External Protective Devices

For safety reasons, it is necessary to install, external circuit breaker at the input A.C. supply and the battery. This chapter provides guidelines for qualified installers that must have the knowledge of local wiring practices for the equipment to be installed.

◆**External Battery**

The UPS and its associated batteries are protected against the effect of over-current through a DC compatible thermo-magnetic circuit-breaker (or a set of fuses) located close to the battery.

◆**UPS Output**

Any external distribution board used for load distribution shall be fitted with protective devices that may avoid the risk of UPS overloaded.

SEC.RU | Короткий путь к информации Скачано с sec.ru

◆ **Over-current**

Protection device shall be installed at the distribution panel of the incoming main supply. It may identify the power cables current capacity as well as the overload capacity of the system.

The following table shows the recommended capacity of the UPS input/output breaker. Please choose as needed.

CAUTION!

UPS has large leakage current. It is not recommended to use circuit breakers with leakage protection.

CAUTION!

The following table shows the recommended preceding stage protection devices to make the UPS reach the rated short-circuit current limit of 10kA and these protection devices must comply with the IEC60947 standard.

Model/ mode	6kVA		10kVA	
	Single mode	Three single modes	Single mode	Three single modes
Mains breaker	40A	16A	63A	20A
Bypass breaker	40A	40A	63A	63A
Maintenance breaker	40A	40A	63A	63A
Output breaker	40A	40A	63A	63A
Battery breaker	40A/3PIN		63A/3PIN	

CAUTION!

In same source single input mode, refer to the recommended model of the bypass breaker for the input circuit breaker in order to avoid exceptions caused by excessive single-phase bypass output current.

The battery breaker should be DC 250Vdc and above.

3.7 Power Cables

◆The cable design shall comply with the voltages and currents provided in this section, Kindly follow local wiring practices and take into consideration the environmental conditions (temperature and physical support media) .

WARNING !

UPON STARTING, PLEASE ENSURE THAT YOU ARE AWARE OF THE LOCATION AND OPERATION OF THE EXTERNAL ISOLATORS WHICH ARE CONNECTED TO THE UPS INPUT/BYPASS SUPPLY OF THE MAINS DISTRIBUTION PANEL.CHECK TO SEE IF THESE SUPPLIES ARE ELECTRICALLY ISOLATED, AND POST ANY NECESSARY WARNING SIGNS TO PREVENT ANY INADVERTENT OPERATION

Cable Dimension

UPS module(KVA)	Cable Dimension			
	AC Input (mm^2)	AC Output (mm^2)	DC Input (mm^2)	Grounding (mm^2)
6	**6**	**6**	**6**	**6**
10	**10**	**10**	**10**	**10**

SEC.RU | Короткий путь к информации Скачано с sec.ru

CAUTION!

Protective earth cable: Connect each cabinet to the main ground system. For Grounding connection, follow the shortest route possible。

WARNING!

FAILURE TO FOLLOW ADEQUATE EARTHING PROCEDURES MAY RESULT IN ELECTROMAGNETIC INTERFERENCE OR IN HAZARDS INVOLVING ELECTRIC SHOCK AND FIRE

3.8 Power cable connect

Once the equipment has been finally positioned and secured, connect the power cables as described in the following procedure.

Verify the UPS is totally isolated from its external power source and also all power isolators of the UPS are open. Check to see if they are electrically isolated, and post any necessary warning signs to prevent their inadvertent operation.

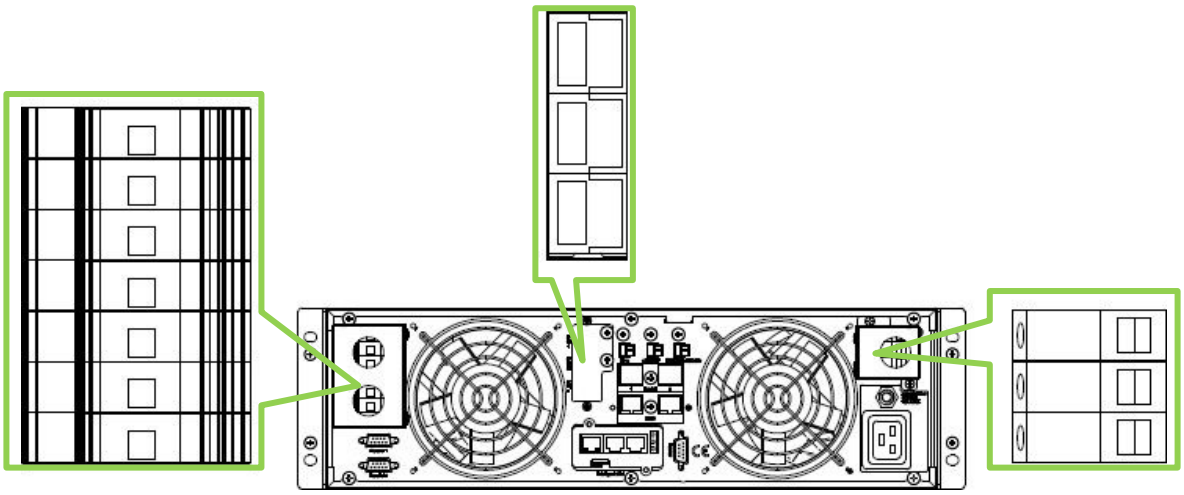

Left: Input Ground, Bypass Neutral, Mains Neutral, Bypass L, Mains A (L1), Mains B (L2), Mains C (L3)

Middle: Bat Positive, Bat Neutral, Bat Negative

Right: Output Ground, Output Neutral, Output L

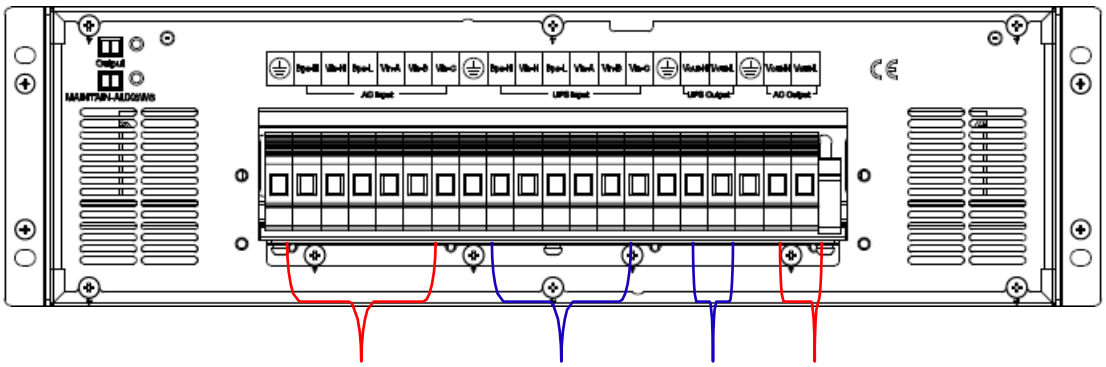

AC Input UPS Input UPS Output Output(Load)

Choose appropriate power cable, and pay attention to the diameter of the connection terminal of the cable that should be greater than or equal to that of the connection poles;

SEC.RU | Короткий путь к информации Скачано с sec.ru

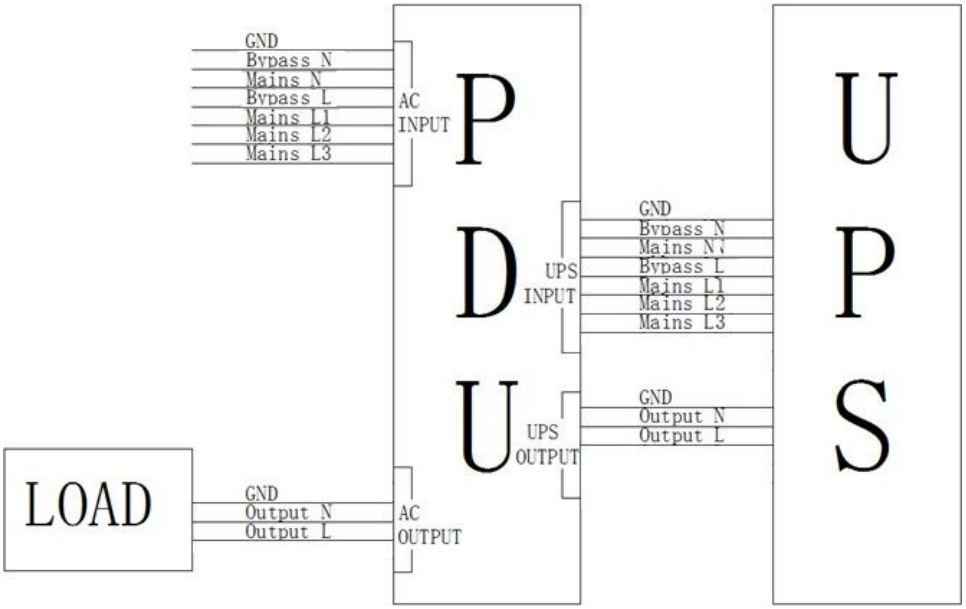

Three phase in single phase out

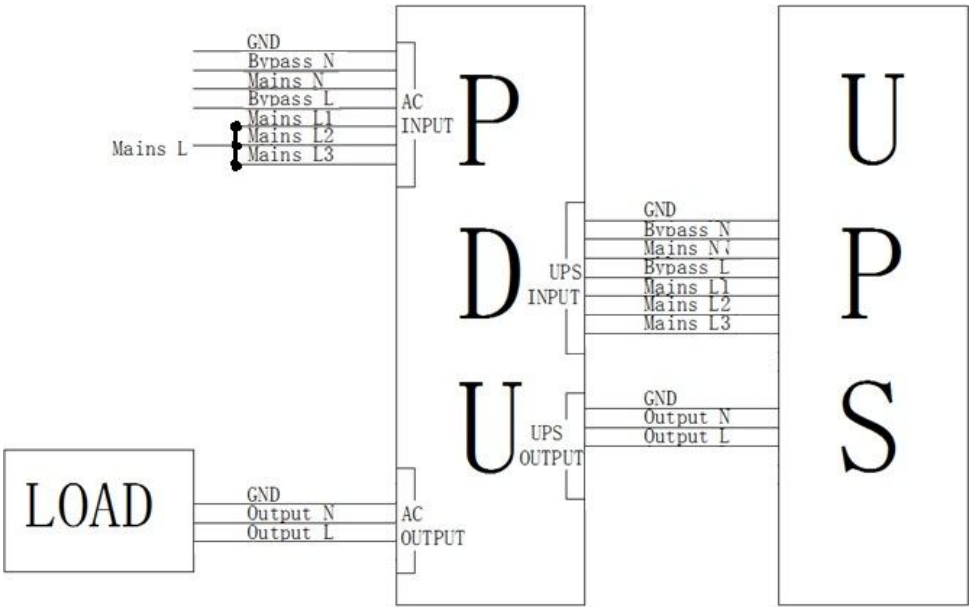

Single phase in single phase out

WARNING!

In the case of ¯split bypass‖ operation, make sure the cable or copper wire between each input lines have been removed. The AC input and the AC bypass supplies must be referenced to the same neutral point.

WARNING!

If the load equipment is not ready to accept power on the arrival of the commissioning engineer then ensure that the system output cables are safely isolated at their ends

CAUTION!

The earthing and neutral bonding arrangement must be in accordance with local and national codes of practice.

SEC.RU | Короткий путь к информации Скачано с sec.ru

Power distribution mode for I/O system

There are four ways to connect the input and output cables according to the power distribution requirements of users:

Three-in single out same source single input (default); three-in single out different source dual input; single in single out same source single input; single in single out different source dual input

When selecting different wiring methods, modify the short connected copper bars according to the wiring method below.

Wiring method	Input connected short copper bar
Three-in single out same source single input (default) 1PCS copper bar short connected to Bps-N and Bps-N; 1PCS copper bar short connected to Bps-L and Vin-A	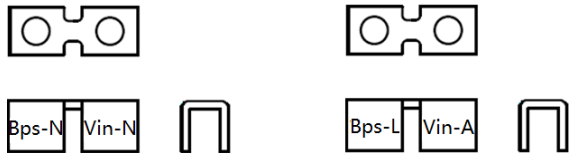
Three-in single out different source dual input 1PCS copper bar short connected to Bps-N and Bps-N	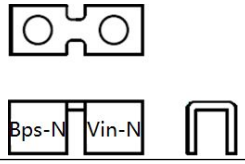
Single in single out same source single input 1PCS copper bar short connected to Bps-N and Bps-N; 1PCS copper bar short connected to Bps-L, Vin-A, Vin-B and Vin-C	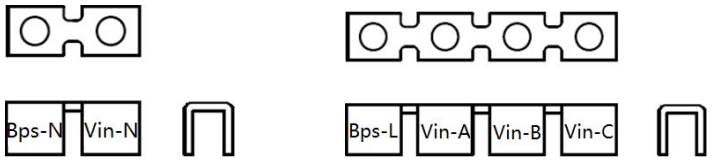
Single in single out different source dual input 1PCS copper bar short connected to Bps-N and Bps-N; 1PCS copper bar short connected to Vin-A, Vin-B and Vin-C	

3.9 Battery connection

The UPS adopts positive and negative double battery framework, totally 16pcs (optional 18/20) in series. A neutral cable is retrieved from the joint between the cathode of the 8th (9th/10th) and the anode of the 9th (10th/11th) of the batteries. Then the neutral cable, the battery Positive and the battery negative are connected with the UPS respectively. The battery sets between the Battery anode and the neutral are called positive batteries and that between neutral and cathode are called negative ones. The user can choose the capacity and the numbers of the batteries according to their desire.

External battery connections for long-run units.

SEC.RU | Короткий путь к информации Скачано с sec.ru

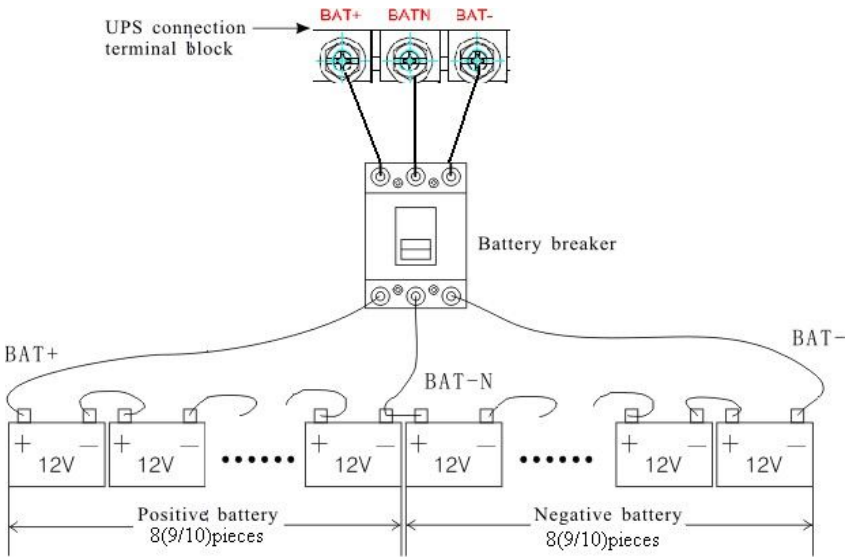

Note：

The BAT+ of the UPS connect poles is connected to the anode of the positive battery, the BAT-N is connected to the cathode of the positive battery and the anode of the negative battery, the BAT- is connected to the cathode of the negative battery.

Factory setting of the long-run unit is battery quantity---16pcs, battery capacity---12V40AH (charger current 6A). When connecting 18/20 batteries, please re-set desired battery quantity and its capacity after UPS starts at AC mode. Charger current could be adjusted automatically according to battery capacity selected. All related settings can be done through LCD panel or monitoring software.

CAUTION!

Ensure correct polarity battery string series connection. I.e. inter-tier and inter block connections are from (+) to (-) terminals. Don't mix batteries with different capacity or different brands, or even mix up new and old batteries, either.

WARNING!

Ensure correct polarity of string end connections to the Battery Circuit Breaker and from the Battery Circuit Breaker to the UPS terminals i.e. (+) to (+) / (-) to (-) but disconnect one or more battery cell links in each tier. Do not reconnect these links and do not close the battery circuit breaker unless authorized by the commissioning engineer.

3.10 UPS Multi - Module Installation

The basic installation procedure of a parallel system comprising of two or more UPS modules is the same as that of single module system. The following sections introduce the installation procedures specified to the parallel system.

3.10.1 Cabinet installation

Connect all the UPS needed to be put into parallel system as below picture.

SEC.RU | Короткий путь к информации Скачано с sec.ru

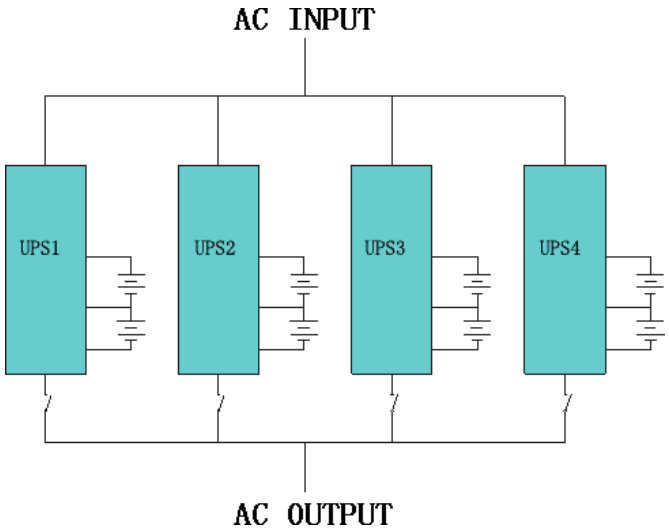

Make sure each UPS input breaker is in ¯off‖ position and there is no any output from each UPS connected. Battery groups can be connected separately or in parallel, which means the system itself provides both separate battery and common battery.

WARNING!

Make sure the N、A（L1）、B（L2）、C（L3）lines are correct, and grounding is well connected.

3.10.2 Parallel cable installation

Shielded and double insulated control cables available must be interconnected in a ring configuration between UPS modules as shown below. The parallel control board is mounted on each UPS module. The ring configuration ensures high reliability of the control.

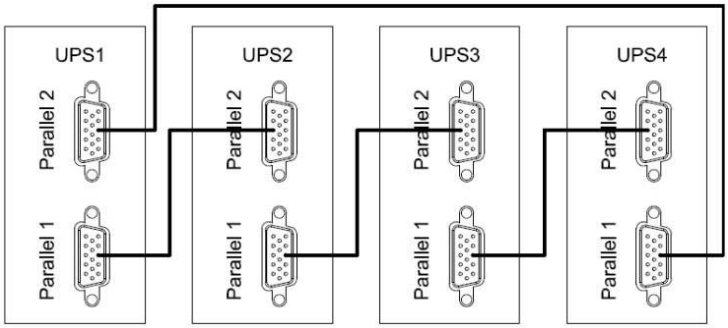

3.10.3 Requirement for the parallel system

A group of paralleled modules behave as one large UPS system but with the advantage of presenting higher reliability. In order to assure that all modules are equally utilized and comply with relevant wiring rules, please follow the requirements below:

1) All UPS modules must be of the same rating and be connected to the same bypass source.

2) The outputs of all the UPS modules must be connected to a common output bus.

3) The length and specification of power cables including the bypass input cables and the UPS output cables should be the same. This facilitates load sharing when operating in bypass mode.

SEC.RU | Короткий путь к информации Скачано с sec.ru

3.11 Computer access

◆One end of a USB cable connect to the computer, the other end connect to the USB port on the UPS.

◆Open the software Muser4000, click ¯system‖ button.

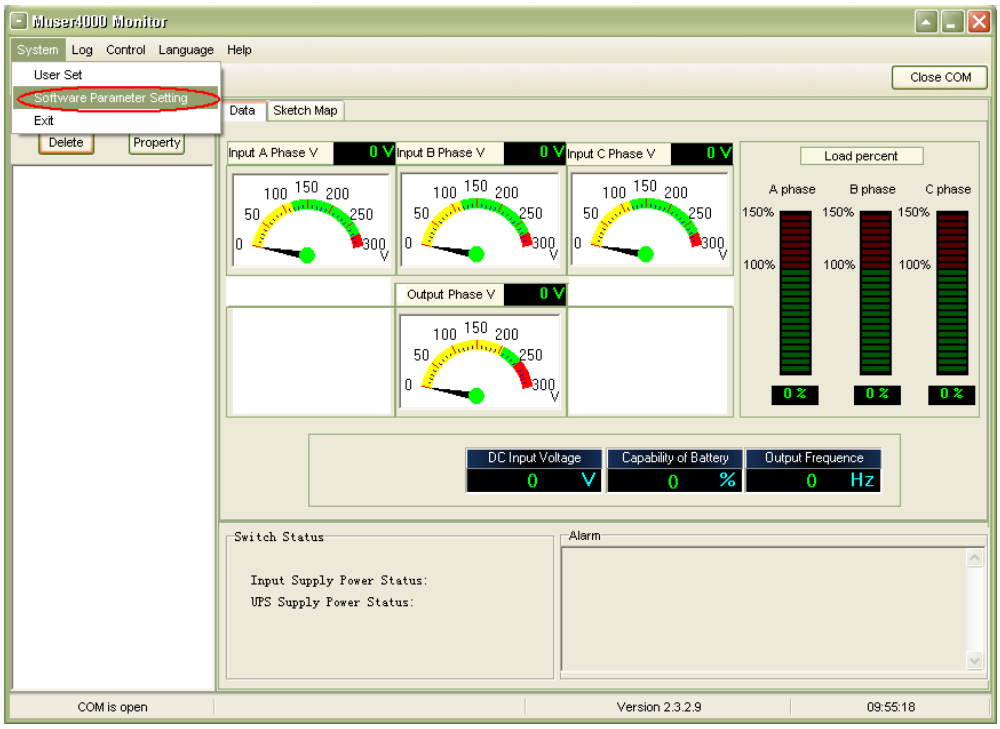

◆A window of ¯Software Parameter Setting‖ comes out as below, COM choose according to the UPS , baud rate choose 9600, protocol choose ¯HIP‖, then save this setting.

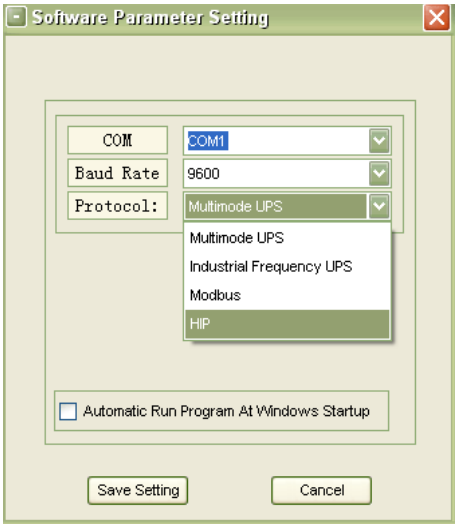

◆On the main page of Muser4000, click the button of ¯Append‖, then goes to a window of ¯Append equipment‖.

SEC.RU | Короткий путь к информации
Скачано с sec.ru

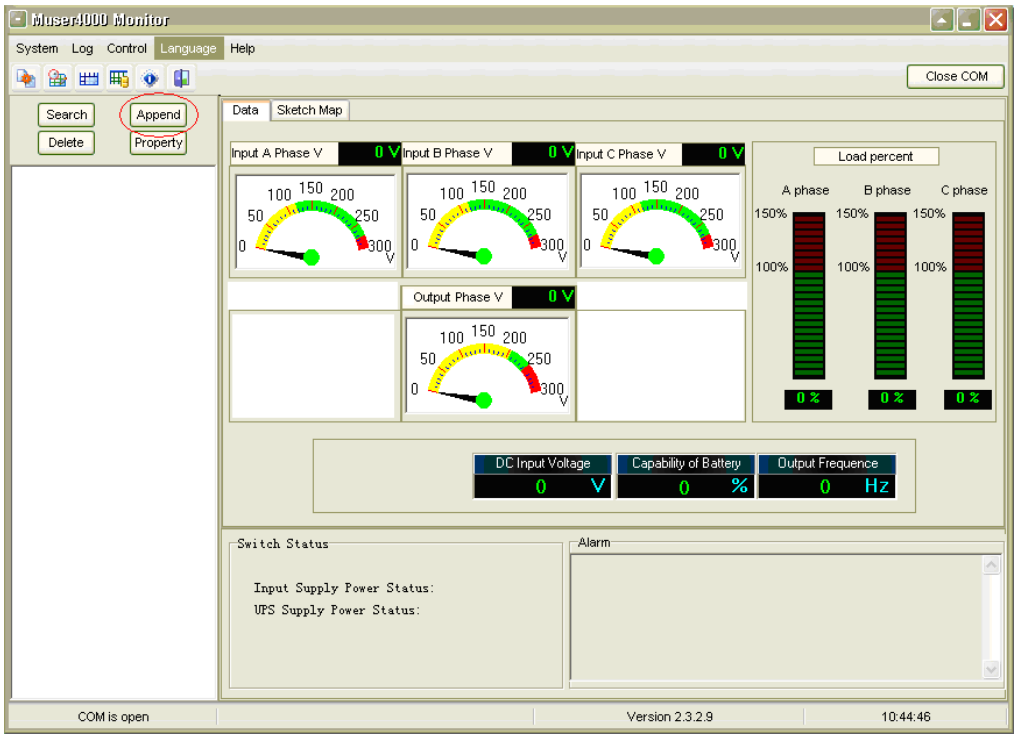

◆ Put the UPS name into ¯Equipment Name‖, and UPS' ID address into ¯Equipment address‖.

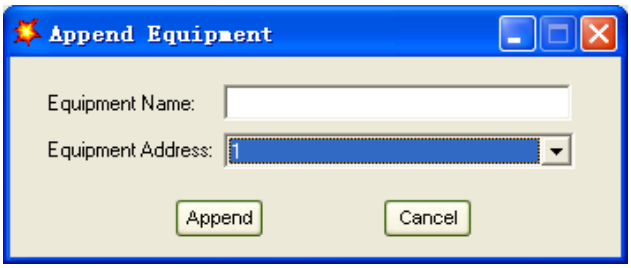

◆ Click the button ¯Append‖, then the connection between UPS & computer is accomplished.

CAUTION!

When the UPS worked on inverter. If you want to use PC to set the output voltage and frequency. Must shut down the inverter first.

SEC.RU | Короткий путь к информации
Скачано с sec.ru

4. Operation

4.1 Operation Modes

The UPS is a double-conversion on-line UPS that may operate in the following alternative modes：

◆Normal mode

The rectifier/charger derives power from the AC Mains and supplies DC power to the inverter while floating and boosting charge the battery simultaneously. Then, the inverter converts the DC power to AC and supplies to the load.

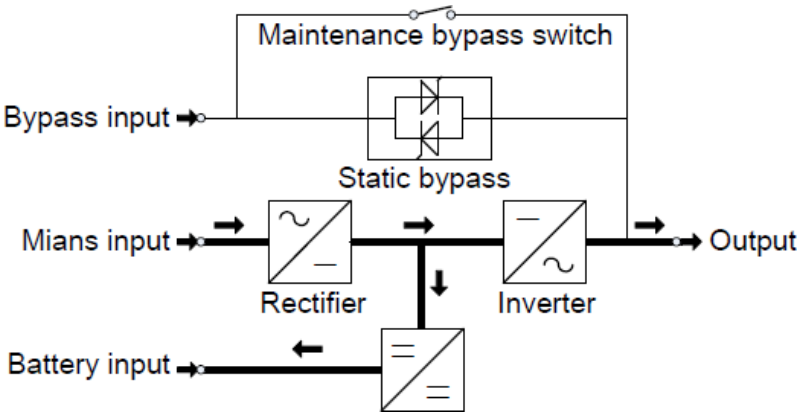

◆Battery mode (Stored Energy Mode)

If the AC mains input power fails, the inverter, which obtains power from the battery, supplies the critical AC load. There is no power interruption to the critical load. The UPS will automatically return to Normal Mode when AC recovers.

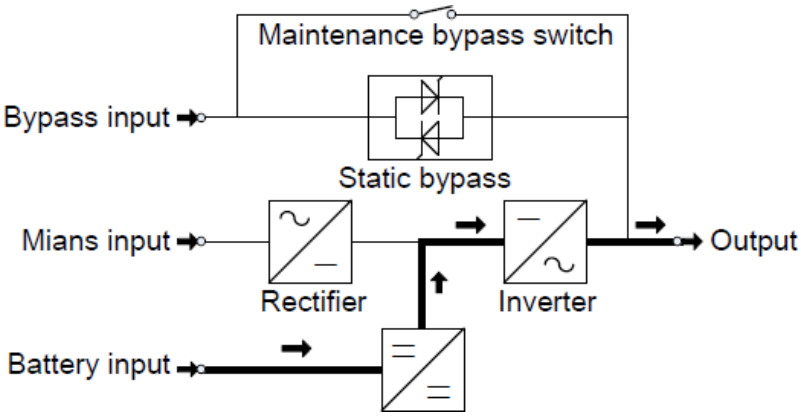

◆Bypass mode

If the inverter is out of order, or if overload occurs, the static transfer switch will be activated to transfer the load from the inverter supply to bypass supply without interruption to the critical load. In the event that the inverter output is not synchronized with the bypass AC source, the static switch will perform a transfer of the load from the inverter to the bypass with power interruption to the critical AC load. This is to avoid paralleling of unsynchronized AC sources. This interruption is programmable but typically set to be less than an electrical cycle e.g. less than 15ms (50Hz) or less than 13.33ms (60Hz).

SEC.RU | Короткий путь к информации Скачано с sec.ru

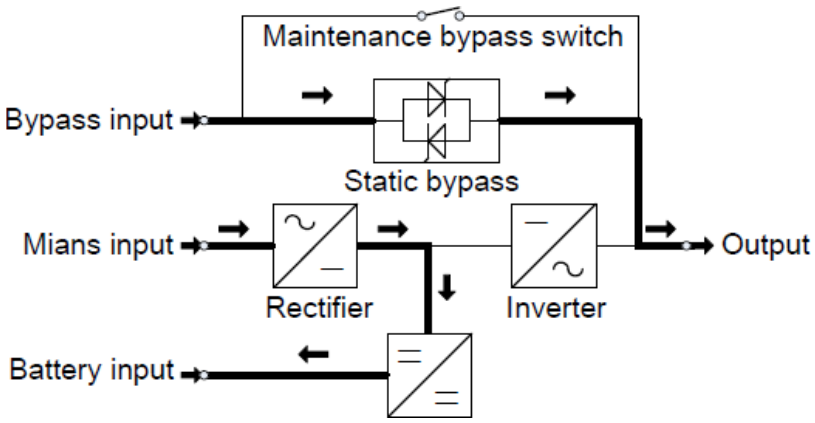

◆**ECO Mode**

When the UPS is at AC Mode and the requirement to the load is not critical, the UPS can be set at ECO mode in order to increase the efficiency of the power supplied. At ECO mode, the UPS works at Line-interactive mode, so the UPS will transfer to bypass supply. When the AC is out of set window, the UPS will transfer from bypass to Inverter and supplies power from the battery, and then the LCD shows all related information on the screen.

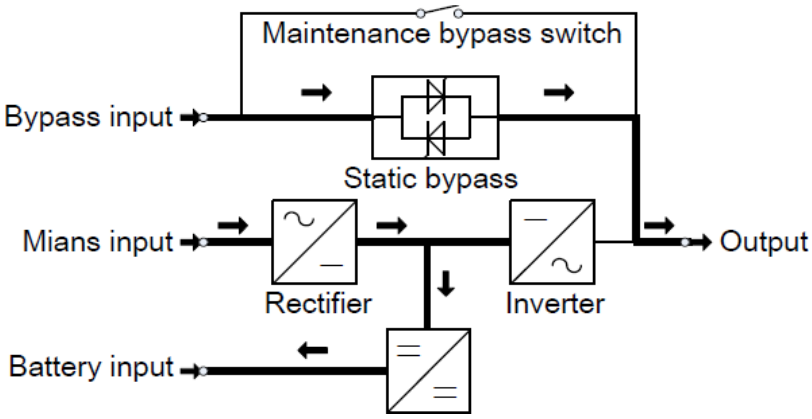

◆**Maintenance mode (Manual Bypass)**

A manual bypass switch is available to ensure continuity of supply to the critical load when the UPS is out of order or in repair and this manual bypass switch bears for equivalent rated load.

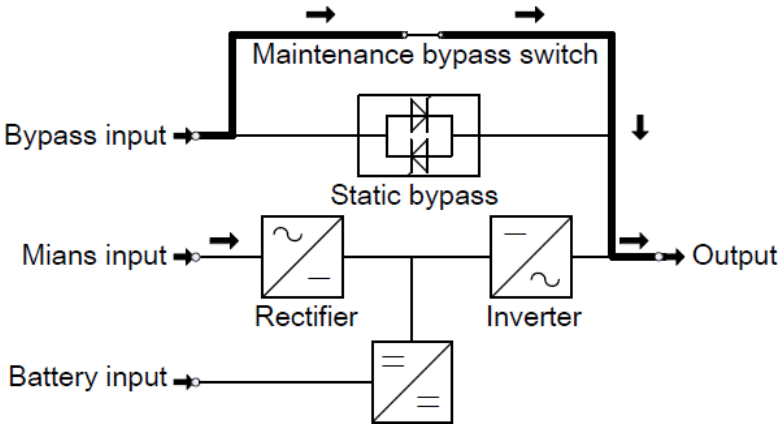

4.2 Turn on/off UPS

4.2.1 Connecting with Utility

CAUTION!

MAKE SURE GROUNDING IS PROPERLY DONE!

SEC.RU | Короткий путь к информации Скачано с sec.ru

◆ Set the Battery Breaker to the ¯ON‖ position according to the user's manual.

◆ Switch ON UPS input switch.

CAUTION !

Check to see if the load is safely connected with the output of the UPS. If the load is not ready to receive power from the UPS, make sure that it is safely isolated from the UPS output terminals

The internal fan of the UPS starts spinning, the UPS is performing self-diagnostics until buzzer beeps twice to show the UPS is normal. Then, the UPS goes to bypass supply, Utility LED and Bypass LED turn Green, the inverter is starting up now. When the inverter is checked ¯normal‖, the UPS goes to working mode and the load is supplied by the inverter now.

No matter the UPS is operated normally or not, the LCD display will indicate current status. The top lines display the UPS operational status and the bottom lines indicate alarm conditions when they occur.

4.2.2 Black(Cold) start procedure

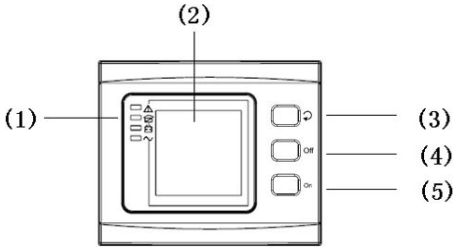

CAUTION!

Follow these procedures when the input AC Utility Failure, but battery is normal

◆ Turn on the battery switch.

The battery will feed the Auxiliary power board.

◆ Trigger the cold start buttons of the modules respectively as the position 5 of the above drawing.

When battery normal, rectifier starts operation, 30s later, inverter starts and operates, INV and output light up.

CAUTION!

Wait for approximately 30 seconds before you press the black start key

4.2.3 Test procedure

CAUTION!

The UPS is operating normally.It may take 60 seconds to boost up the system and perform self-test completely.

◆ Switch off the MAINS to simulate utility failure, the rectifier will turn off and the battery should feed the inverter without interruption. At this time, the LEDs of battery should be turned on.

◆ Switch on the MAINS to simulate utility recovery, the rectifier will restart automatically after 20 seconds and the inverter will supply to the load. It is suggested to use Dummy loads for testing. The UPS can be loaded up to its maximum capacity during load test。

SEC.RU | Короткий путь к информации Скачано с sec.ru

4.2.4 Inverter Off

When the Utility is normal, press ¯Off‖ button for approx. 1 sec until beep sounds, the inverter LED will extinguish, the bypass LED on, then the UPS turns to bypass supply.

When the UPS is on battery mode or without AC, press ¯Off‖ button for approx. 1 sec until beep sounds, the output of the UPS is off, fan stop spinning.After 60 seconds, all the LED on the LCD display extinguish.

4.2.5 Disconnecting with Utility

CAUTION!

This procedure should be followed to completely shut down the UPS and the LOAD. After all power switches, isolators and circuit breakers are opened, there will be no output.

◆ After the inverter is off, turn the Utility and battery breakers to ¯OFF‖, then the LCD display will extinguish completely and fan stops spinning in 60 seconds. If there are external battery packs connected, please also turn the battery breaker to ¯OFF‖.

WARNING!

Wait for about 5 minutes for the internal D.C. bus bar capacitors to be completely discharged.

4.2.6 Parallel setting

◆ Connect the UPS with computer. Power on the UPS.

◆ Open Muser4000 software, after connecting with the UPS successfully, click ¯System‖->¯User Set‖

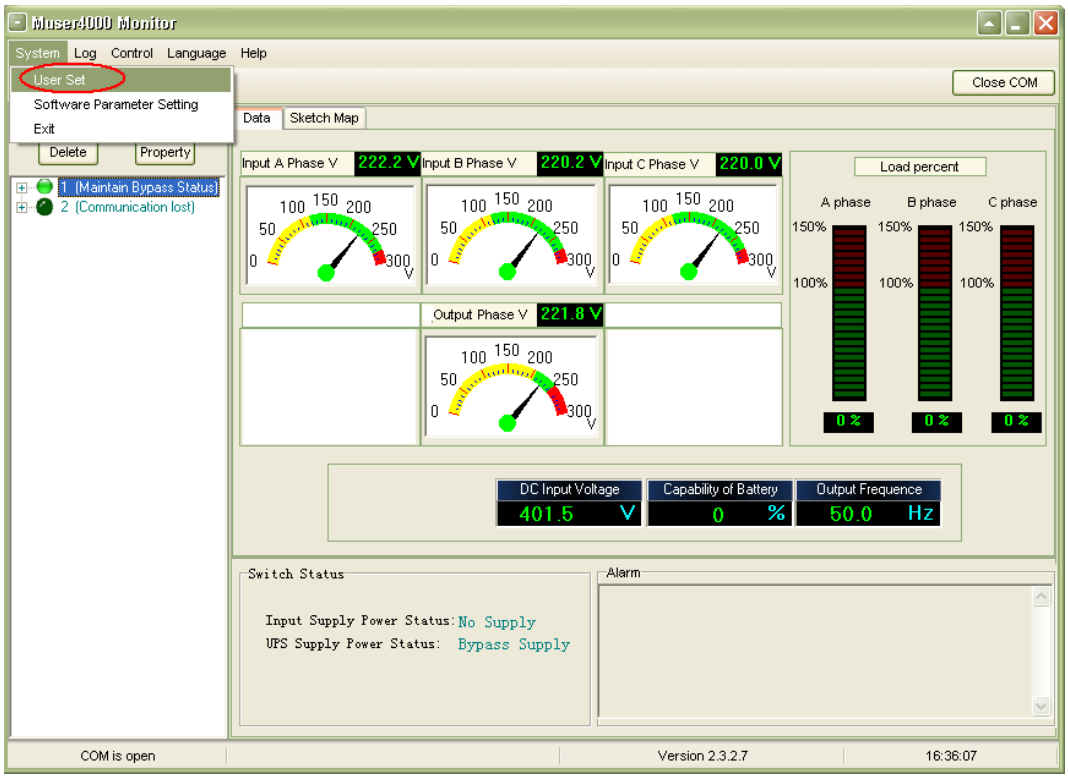

SEC.RU | Короткий путь к информации
Скачано с sec.ru

◆ Click ¯Set‖ at ¯User Set‖ window;

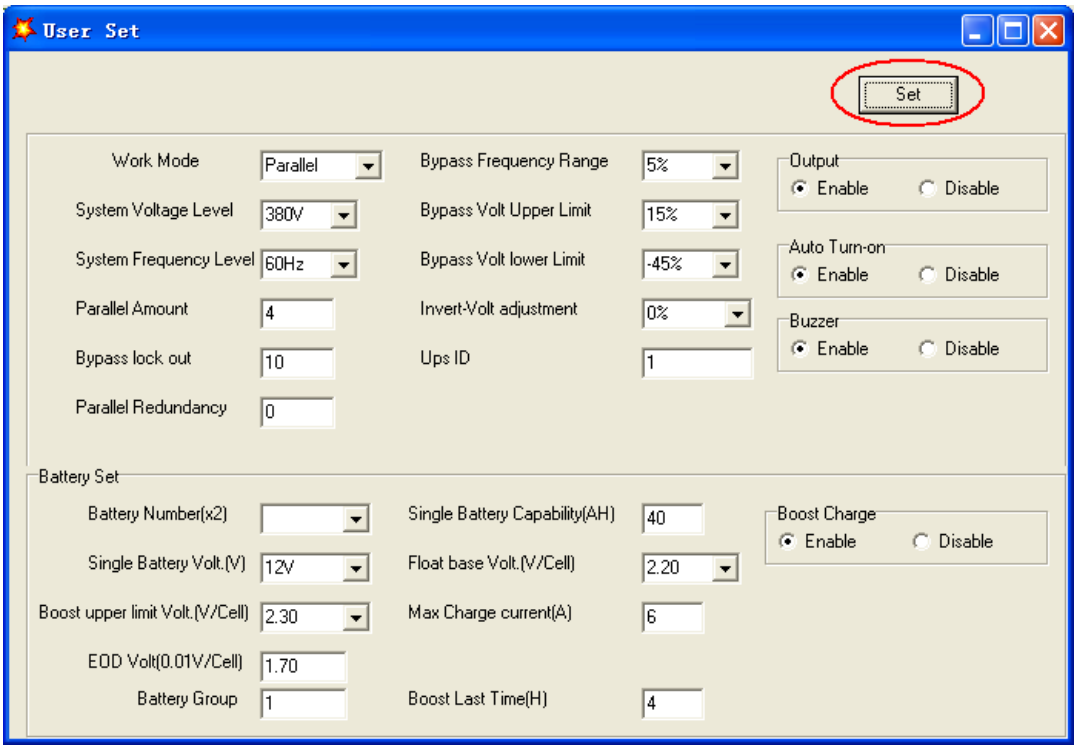

◆ At the window of ¯Data Set‖, click ¯Work Mode‖,, choose ¯Parallel‖ for the value, then click ¯Set‖ as shown in below picture. If the UPS sounds a ¯beep‖, that means the setting is correct.

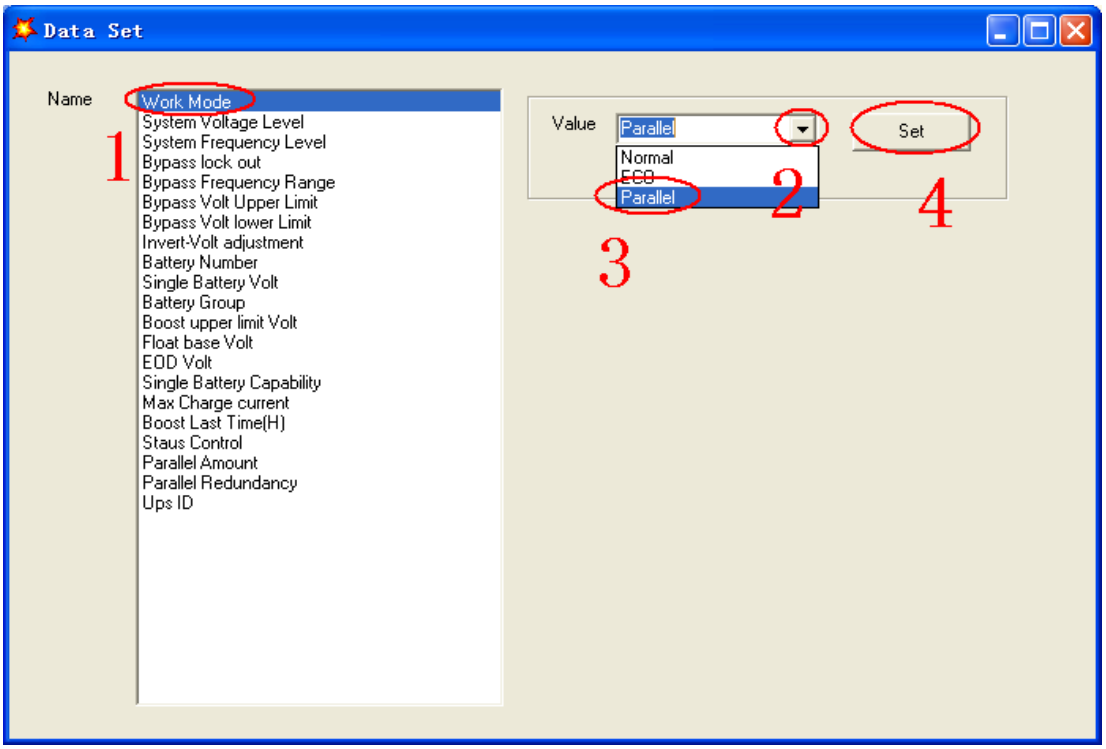

◆ At the window of ¯Data Set‖, click ¯Ups ID‖, write a value for the parallel UPS ID at the right side, such as ¯1‖, then click ¯Set‖ as shown in below picture. If the UPS sounds a ¯beep‖, that means the setting is correct.

SEC.RU | Короткий путь к информации Скачано с sec.ru

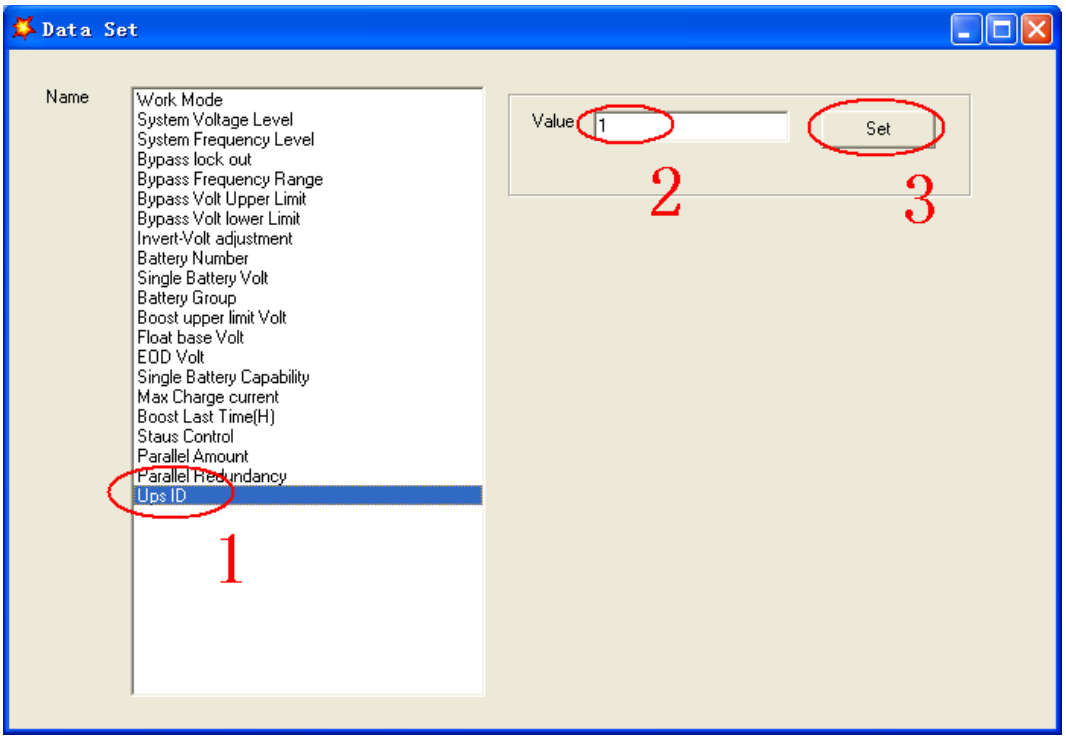

CAUTION!

After changing the parallel system ID, the connection between Muser4000 and equipment might be interrupted. If it occurs, please re-connect in accordance with the instruction described before.

CAUTION!

Parallel cable cannot be connected when setting the parallel parameters.

◆ After setting the UPS needed to be paralleled, power off all the UPS. Connect all the UPS according to ¯parallel cable installation‖, and then power on the UPS.

4.3 The Display

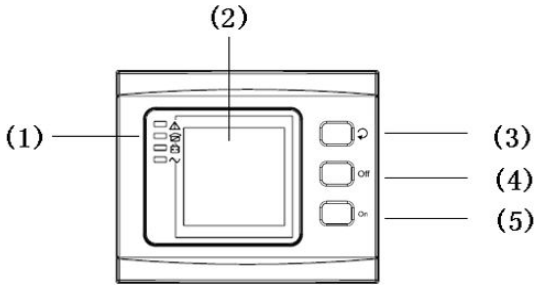

Overview of the operating panel of the UPS

（1）LED indicator （2）LCD Display （3）scroll button： enter to next item （4）OFF button （5）ON button

Note: The operation will be available when all the above buttons are pressed and kept for 1s.

Introduction

CAUTION!

The display provides more functions than those described in this manual.

SEC.RU | Короткий путь к информации Скачано с sec.ru

There are 12 interfaces available in the LCD display:

Item	Interface Description	Content Displayed
01	CODE	Operational status and mode
02	Input A(Input L1)	Voltage & Frequency
03	Input B(Input L2)	Voltage & Frequency
04	Input C(Input L3)	Voltage & Frequency
05	Bat. +	Voltage & Current
06	Bat. -	Voltage & Current
07	Backup time	Capacity & Time
08	Output	Voltage & Frequency
09	Load	Load
10	Temperature	battery temperature(need to connect batter sensor, Internal temperature and ambient temperature
11	Software version & model	Version of rectifier software, version of inverter software, model
12	CODE	Alarm Code(Warming Message)

1) When the UPS is connecting with the Utility or Battery at cold start mode, it shows as drawing below:

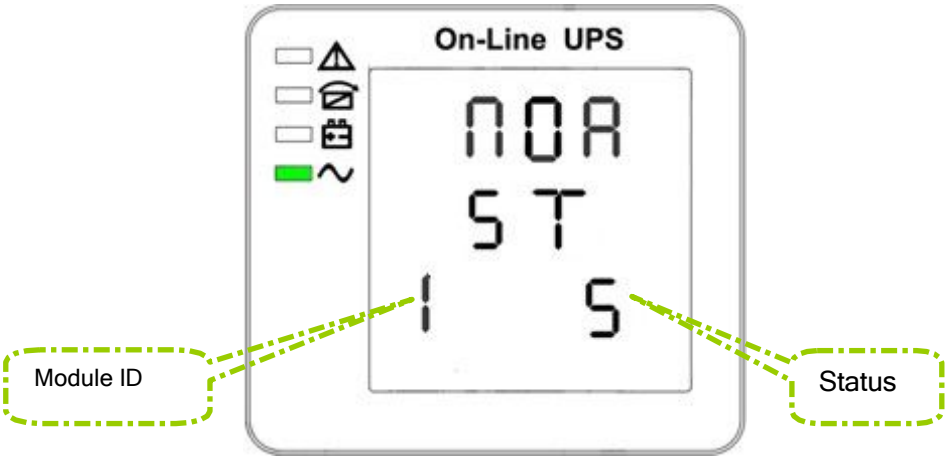

Operational Status and mode (When the UPS at single mode, it shows ¯NOR‖ or ¯ECO‖, but If the UPS at parallel mode, it shows ¯PAL‖ instead.)

2) Press ¯scroll‖ button, the UPS goes to next page as shown below.

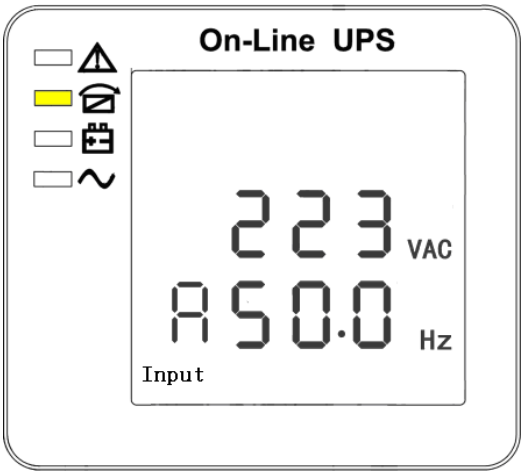

2. Phase A (L1) Input/Frequency

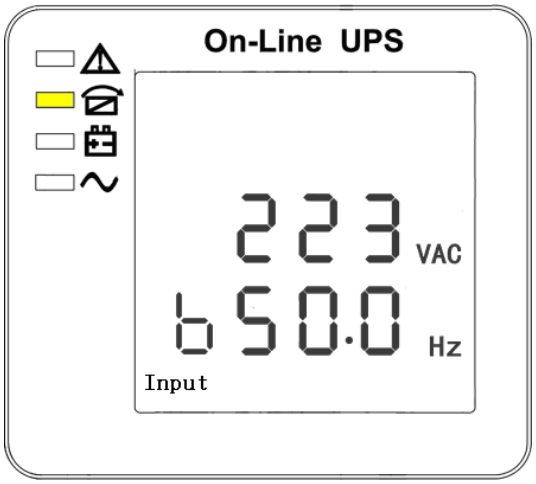

3. Phase B (L2) Input/Frequency

SEC.RU | Короткий путь к информации Скачано с sec.ru

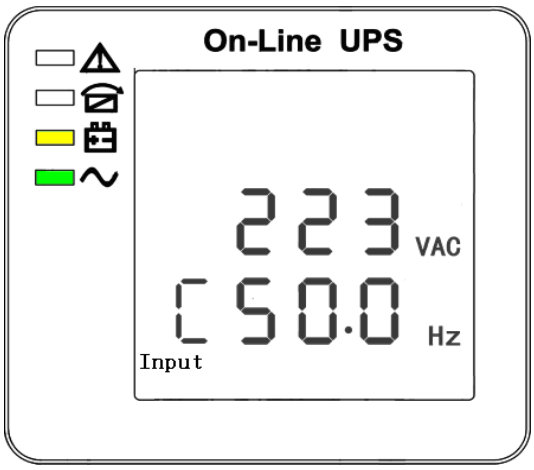

4. Phase C (L3) Input/Frequency

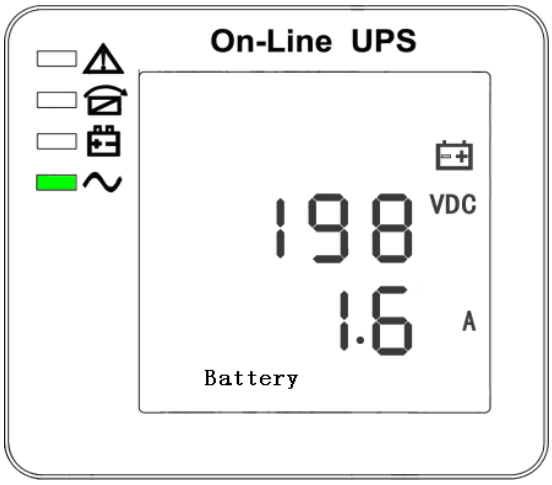

5. Bat + (Positive)

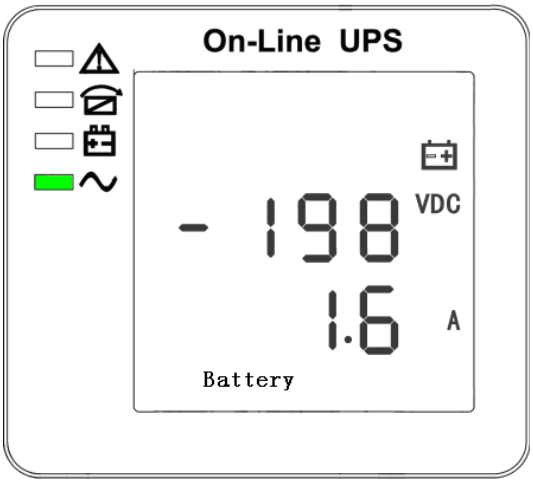

6. Bat - (Negative)

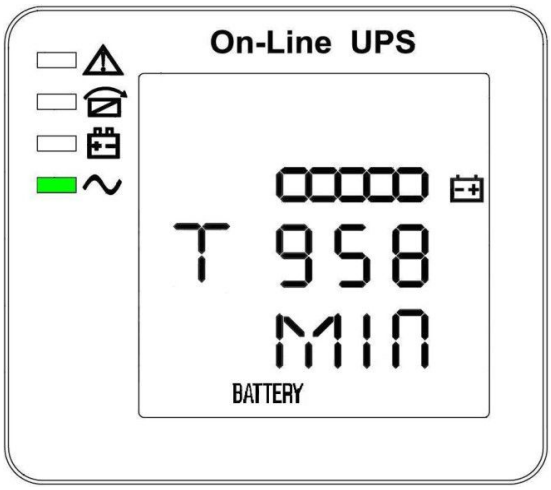

7. Backup time

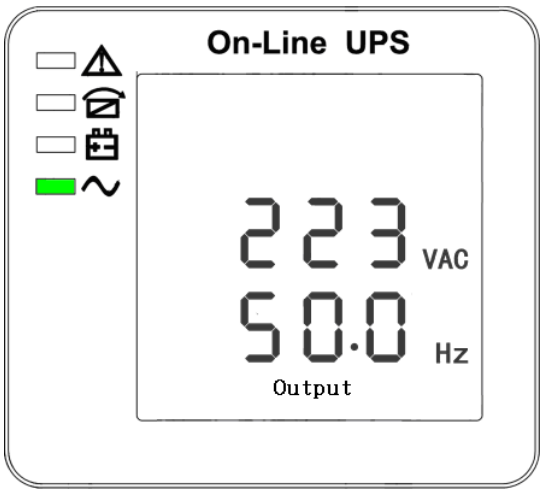

8. Output Voltage/Frequency

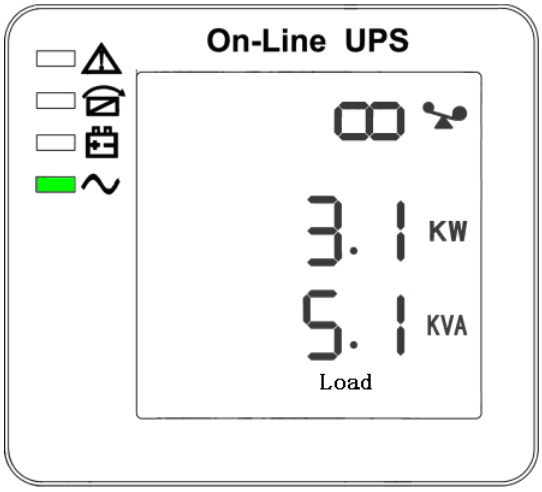

9. Load Capacity

SEC.RU | Короткий путь к информации
Скачано с sec.ru

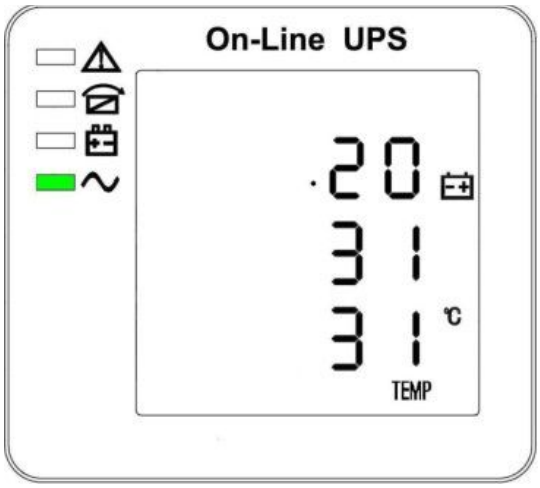

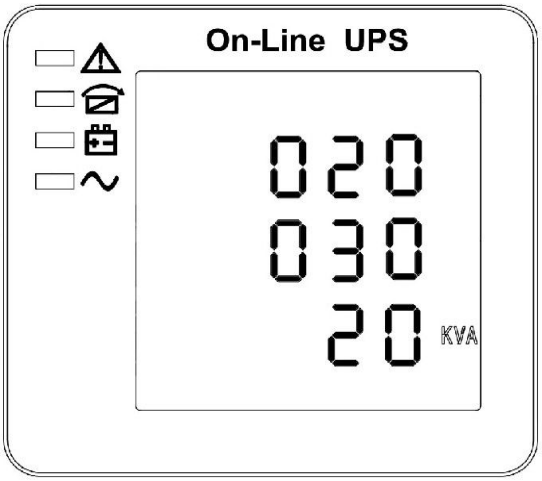

10. Temperature (battery/Internal and ambient temperature)

11. Software version & model

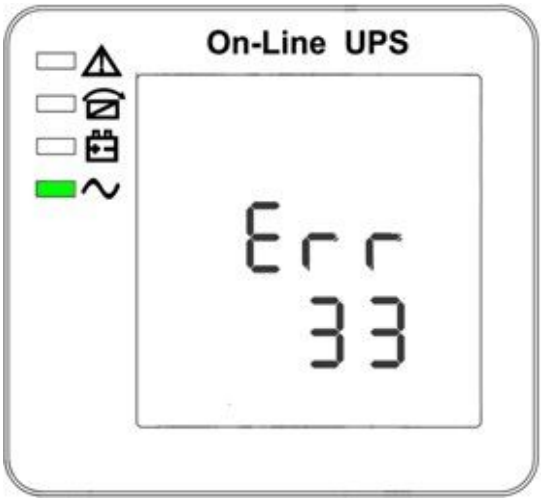

12. Alarm Code

If has battery charging, above 2-13 interface windows will also display the charging status at the same time as below:

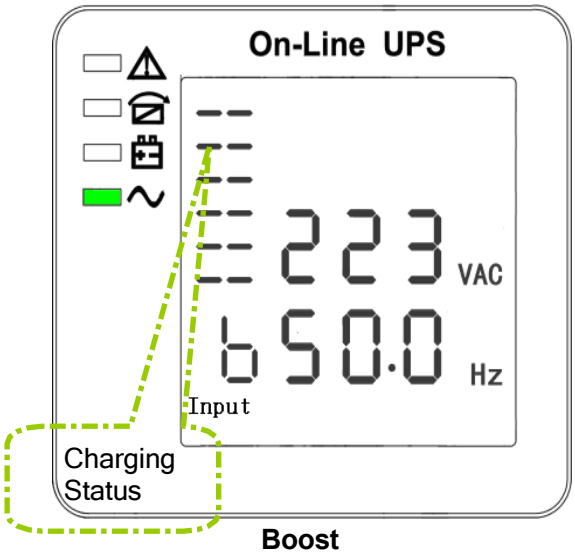

Boost

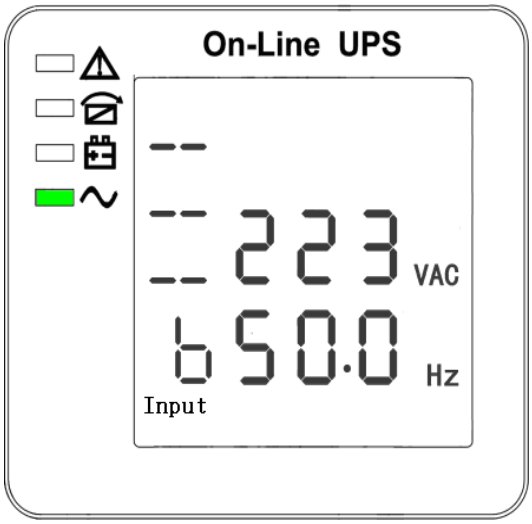

Floating

3) Pressing ¯scroll‖ button, you may circulate all messages from the first one to the last one then returns back to the first one and vice versa.

4) All alarm codes are present when abnormal behavior(s) occur(s).

SEC.RU | Короткий путь к информации Скачано с sec.ru

4.4 Parameters setting

The setting function is controlled by 3 buttons (↻, OFF, ON) : ↻---goes into the setting page and value adjustment; OFF---for exit setting; ↻---for choosing different pages.

After the UPS turn ON, press buttons ¯↻‖ & ¯OFF‖ for 2 seconds and then goes into the setting interface page.

4.4.1 Mode setting

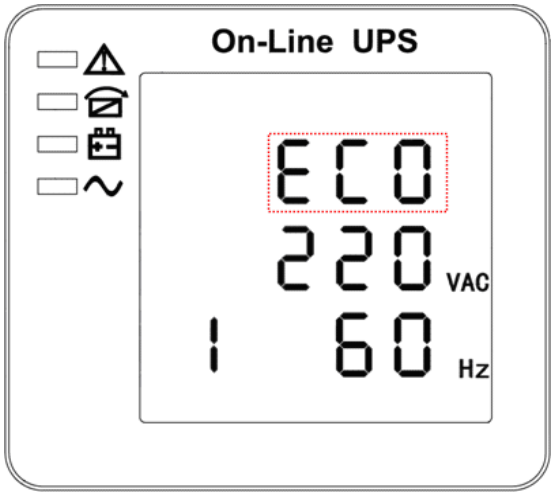

Mode setting (Note: Inside the broken-line is the flashing part.)

After entering the setting menu, its mode setting defaulted, and the mode setting line flashing as in above picture. ①Use button ¯↻‖ to choose different mode. There are 3 different modes for setting: ECO, PAL, NOR. ②Press ¯ON‖ to exit the mode setting and save the mode setting value, and goes to output voltage setting. ③Press ¯OFF‖ to exit the mode setting, and goes to parallel redundancy quantity setting.

4.4.2 Output voltage setting

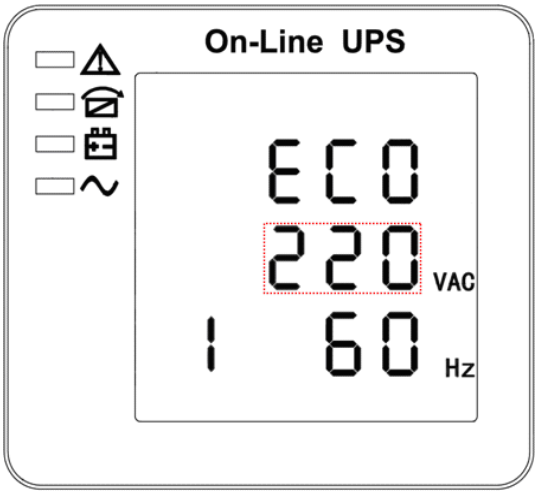

Output voltage setting (Note: Inside the broken-line is the flashing part.)

In the mode setting press ¯ON‖ or in frequency setting press ¯Off‖, it goes to the output voltage setting. The output voltage line flashes as in above picture. ①Use button ¯↻‖ to choose the different output voltage. There are 3 different voltages---220, 230, 240. ②Press ¯ON‖ to exit the output voltage setting and save the output voltage setting value, and goes to frequency setting. ③Press ¯OFF‖ to exit the output voltage setting, and goes to mode setting.

CAUTION!
When powered by inverter, it is necessary to turn off the inverter before setting voltage and frequency level.

SEC.RU | Короткий путь к информации Скачано с sec.ru

4.4.3 Frequency setting

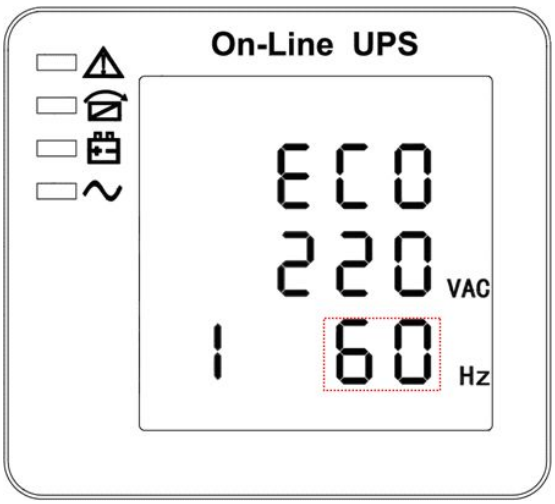

Frequency setting (Note: Inside the broken-line is the flashing part.)

In the output voltage setting press ¯ON‖ or in battery capacity setting press ¯OFF‖, it goes to the frequency setting. The frequency line flashes as in above picture. ①Use button ¯↻‖ to choose the different frequency. There are 2 different frequency---50,60Hz. ②Press ‖ON‖ to exit the frequency setting and save the frequency setting value and goes to battery capacity setting. ③Press ‖OFF‖ to exit the frequency setting, and goes to output voltage setting.

CAUTION!

When powered by inverter, it is necessary to turn off the inverter before setting voltage and frequency level.

4.4.4 Battery capacity setting

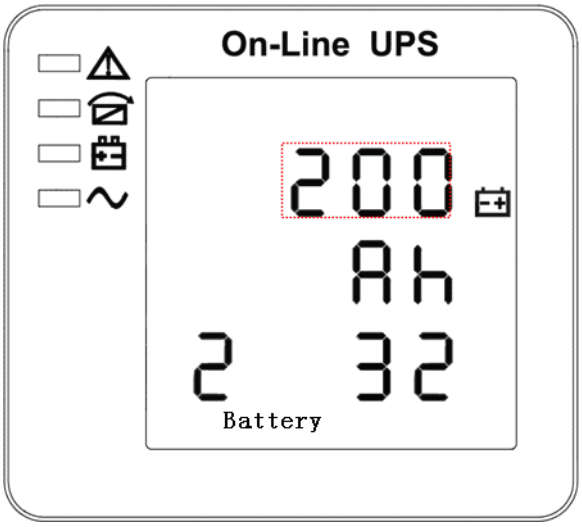

Battery capacity setting (Note: Inside the broken-line is the flashing part.)

In the frequency setting press ¯ON‖ or in battery quantity setting press ¯OFF‖, it goes to the battery capacity setting. The battery capacity line flashes as in above picture. ①Use button ¯↻‖ to choose the different battery capacity. Battery capacity range is 1-999Ah. (Note: long-press of ¯↻‖ can adjustment battery capacity quickly.) ②Press ‖ON‖ to exit the battery capacity setting and save the capacity setting value and goes to battery quantity setting. ③Press ‖OFF‖ to exit the battery capacity setting and goes to frequency setting.

SEC.RU | Короткий путь к информации Скачано с sec.ru

4.4.5 Battery quantity setting

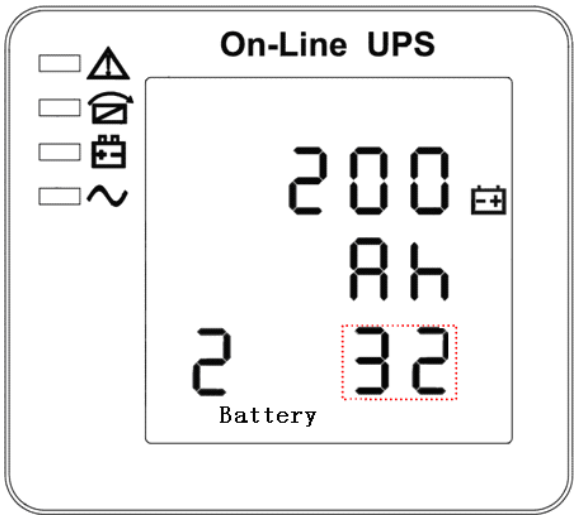

Battery quantity setting (Note: Inside the broken-line is the flashing part.)

In the battery capacity setting press ¯ON‖ or in bypass voltage upper limit setting press ¯OFF‖, it goes to the battery quantity setting. The battery quantity line flashes as in above picture. ①Use button ¯↻‖ to choose the different battery quantity. ②Press ¯ON‖ to exit the battery quantity setting and save the battery quantity setting value and goes to bypass voltage upper limit setting. ③Press ¯OFF‖ to exit the battery quantity setting and goes to battery capacity setting.

4.4.6 Bypass voltage upper limit setting

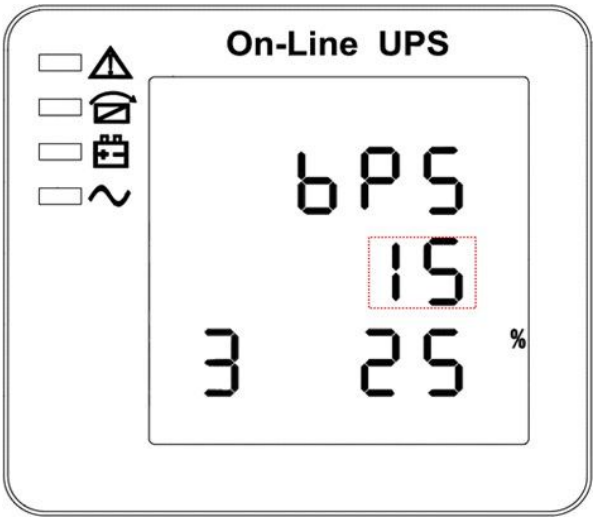

Bypass voltage upper limit setting (Note: Inside the broken-line is the flashing part.)

In the battery quantity setting press ¯ON‖ or in bypass voltage lower setting press ¯OFF‖, it goes to the bypass upper limit setting. The bypass upper limit line flashes as in above picture. ①Use button ¯↻‖ to set the different bypass voltage upper limit. The bypass voltage upper limit range is 10%, 15%, 20%, 25 %(25% only for 220V output). ②Press ¯ON‖ to exit the bypass voltage upper limit setting and save the bypass voltage upper limit setting value and goes to bypass voltage lower limit setting. ③Press ¯OFF‖ to exit the bypass voltage upper limit setting and goes to battery quantity setting.

SEC.RU | Короткий путь к информации Скачано с sec.ru

4.4.7 Bypass voltage lower limit setting

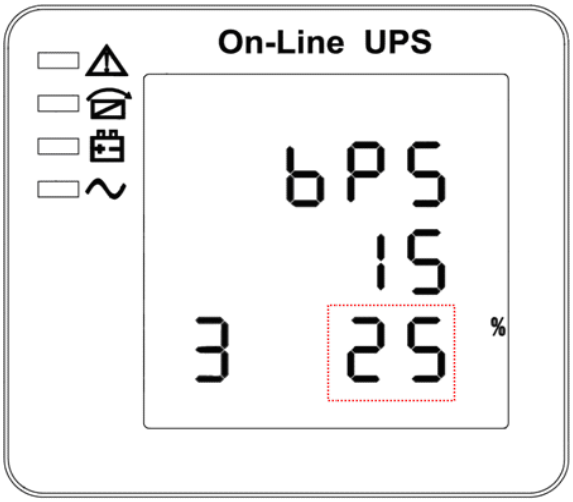

Bypass voltage lower limit setting (Note: Inside the broken-line is the flashing part.)

In the bypass voltage upper limit setting press ¯ON‖ or in parallel ID setting press ¯OFF‖, it goes to the bypass lower limit setting. The bypass lower limit line flashes as in above picture. (¯-‖ for negative, positive does not have any symbol.) ①Use button ¯↻‖ to set the different bypass voltage lower limit. The bypass voltage lower limit range is 10%, 20%, 30%, 45%. ②Press ¯ON‖ to exit the bypass voltage lower limit setting and save the bypass voltage lower limit setting value and goes to buzzer mute setting. ③Press ¯OFF‖ to exit the bypass voltage lower limit setting and goes to bypass upper limit setting.

4.4.8 Buzzer Mute Setting

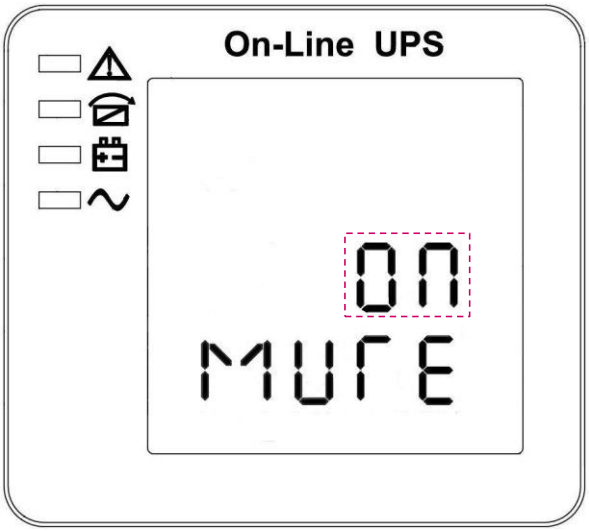

Buzzer Settings (note: red dashed box is the scintillation part

In the bypass voltage low limit setting press ¯ON‖ or in battery self-test setting press ¯OFF‖, it goes to buzzer setting. The scintillation of setting state shows as the figure (Note: ON shows MUTE, OFF shows NO MUTE).①Press button ¯↻‖ for Mute Cycle Settings, mute choice has On and Off. ②Press button ¯ON‖ exits mute setting and save mute setting state and change to battery self-test settings. ③Press button ¯OFF‖ exits mute setting and change to bypass voltage lower limit setting.

SEC.RU | Короткий путь к информации Скачано с sec.ru

4.4.9 Periodical battery self-test Setting

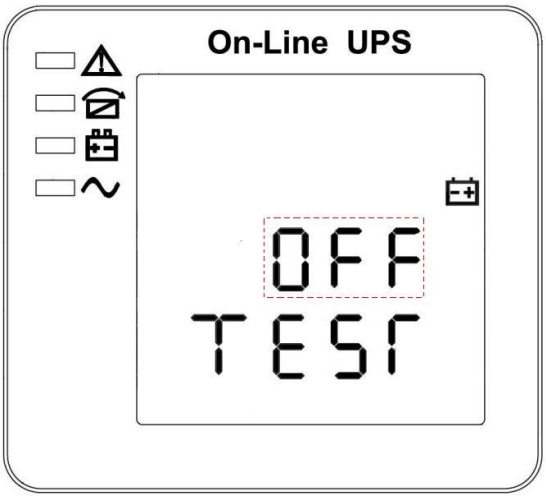

Periodical battery self-test setting (note: the part in dashed box flashes)

In the buzzer setting press ¯ON‖ or in parallel ID setting press ¯OFF‖, it goes to the battery self-test setting. In the meantime the setting state flashes as above picture shows (Note: ON 1- the battery self-test function is enabled, UPS will do self-test 10 seconds every 30 days; ON 2- the battery self-test function is enabled, UPS will do self-test 10 minutes every 30 days; ON 3- the battery self-test function is enabled, UPS will do self-test till battery voltage reaches EOD point every 30 days;

OFF-battery self-test function is disabled.). ①Press ¯↻‖ to set periodically self-test setting. The options are OFF, ON 1, ON 2 and ON 3. ②Press ¯ON‖ to exit Periodically Self-test setting and save the setting value, and goes to battery temperature compensation sensor switch setting. ③Press ¯OFF‖ to exit Periodically Self-test setting and goes to buzzer setting.

4.4.10 Battery temperature compensation sensor switch setting

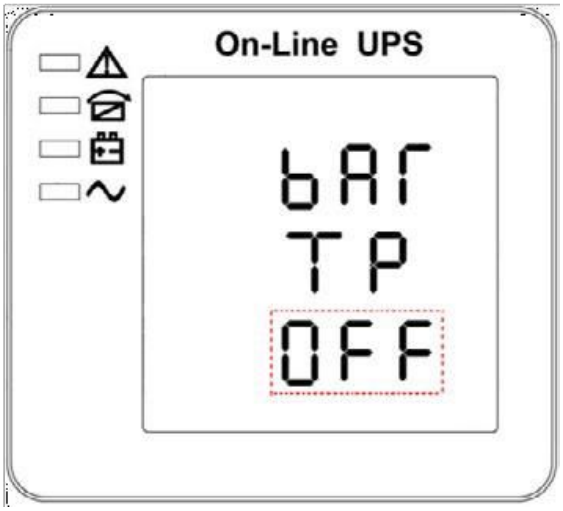

Battery temperature compensation sensor switch setting (Note: the information in the red box will be flashing)

Press ¯ON‖ under the periodical battery self-test setting or press ¯OFF‖ under device address setting, goes to the battery temperature compensation switch setting. The setting state flashes as above picture shows (Note: OFF means turn off the sensor switch, ON means turn on the sensor switch, send query command to sensor with address 11,12 every second. ①Press ¯↻‖ is to set the battery sensor, with options OFF & ON. ②Press ¯ON‖ to exit the battery sensor setting and save

SEC.RU | Короткий путь к информации Скачано с sec.ru

the battery sensor setting value and transfer to device address setting. ③Press ¯OFF‖ to exit the battery
sensor setting and transfer to battery periodical battery self-test setting.

SEC.RU | Короткий путь к информации Скачано с sec.ru

4.4.11 Device address setting

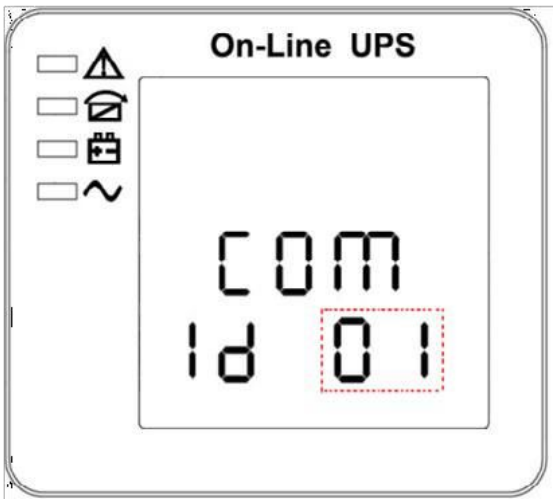

Device address setting(Note: the information in the red box will be flashing)

Press ¯ON‖ under the battery temperature compensation sensor switch setting or press ¯OFF‖ under parallel ID set- ting, goes to the device address setting. The setting state flashes as above picture shows (Note: device address is1~15, it is the MODBUS device address at RS232 & RS485 communication ports. ①Press ¯↻‖ to set the address, with options 1~15. When battery temperature sensor is open, can choose 1~10 & 13~15; If it's parallel mode and device address <= parallel quantity, device address= parallel ID. ②Press ¯ON‖ to exit the device address setting and save the device address setting value and parallel ID setting. (Note: Under single UPS mode, until this device address setting save and exit, single UPS setting is done.) ③Press ¯OFF‖ to exit the device address setting and transfer to battery temperature compensation sensor setting.

4.4.12 Parallel ID setting

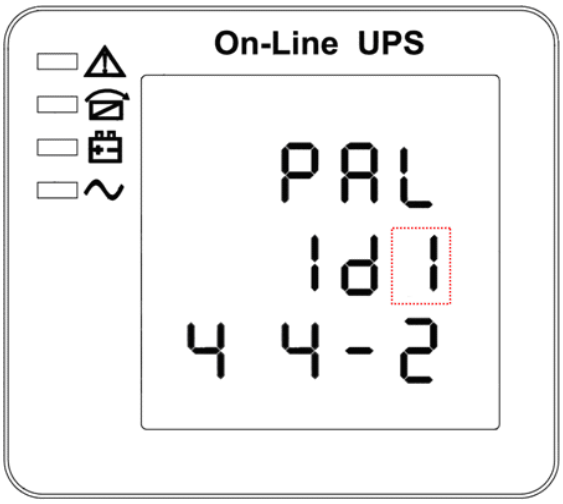

Parallel ID setting (Note: Inside the broken-line is the flashing part.)

When in device address setting press ¯ON‖ or when under parallel quantity setting press ¯OFF‖, it goes to the parallel ID setting. The parallel ID flashes as in above picture. ①Use button ¯↻‖ to set the different parallel ID. The parallel ID range is 1~4. ②press ¯ON‖ to exit the parallel ID setting and save the parallel ID setting value and goes to parallel quantity setting. ③press ¯OFF‖ to exit the parallel ID setting and goes to device address setting.

CAUTION!
Parallel cable cannot be connected when setting the parallel

SEC.RU | Короткий путь к информации Скачано с sec.ru

parameters.

SEC.RU | Короткий путь к информации Скачано с sec.ru

4.4.13 Parallel quantity setting

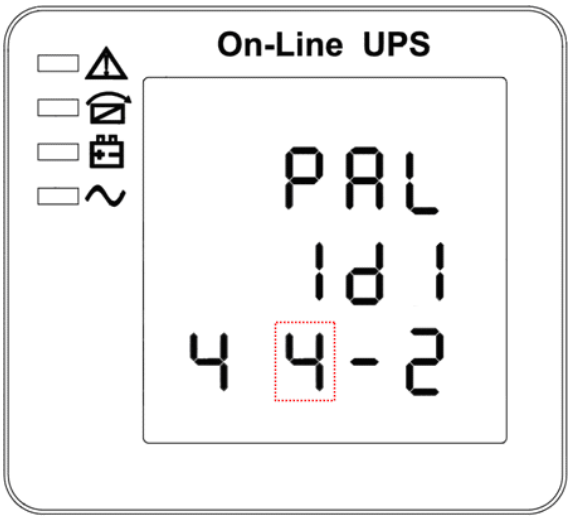

Parallel quantity setting (Note: Inside the broken-line is the flashing part.)

When under the parallel ID setting press ¯ON‖ or when under parallel redundancy quantity setting press ¯OFF‖, it goes to the parallel quantity setting. The parallel quantity flashes as in above picture.

①Use button ¯↻‖ to set the parallel quantity. The parallel quantity range is 2~4. ②Press ¯ON‖ to exit the parallel quantity setting and save the parallel quantity setting value and goes to parallel redundancy quantity setting. ③Press ¯OFF‖ to exit the parallel quantity setting and goes to parallel ID setting.

4.4.14 Parallel redundancy quantity setting

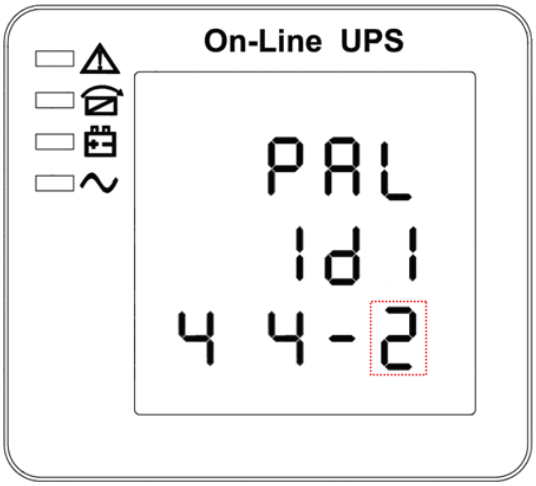

Parallel redundancy quantity setting (Note: Inside the broken-line is the flashing part.)

When under the parallel quantity setting press ¯ON‖, it goes to the parallel redundancy quantity setting. The parallel redundancy quantity flashes as in above picture. ①Use button ¯↻‖ to set the parallel redundancy quantity. The parallel redundancy quantity range is 0~3. ②press ¯ON‖ to exit the mode setting and save the mode setting value and then UPS LCD panel setting is accomplished. ③ Press ¯OFF‖ to go to parallel quantity setting.

SEC.RU | Короткий путь к информации Скачано с sec.ru

4.5 Parallel system commissioning

Parallel system should be commissioning when the stand-alone are all intact.

Take 4 units in parallel for example.

1) Confirm the input/output wires connection and input phase sequence are correct; switch off the battery breaker, and measure the +/- bat voltage of all battery group are normal.
2) Connect the parallel cable, it should be formed loop connection。
3) Switch on the input breaker of unit 1,and access LCD setting interface to setting the working mode、ID、parallel number、redundant number. The setting interface is showed as below, require setting the in series number、capacity of battery. The output voltage level and Bypass protection range are default setting.

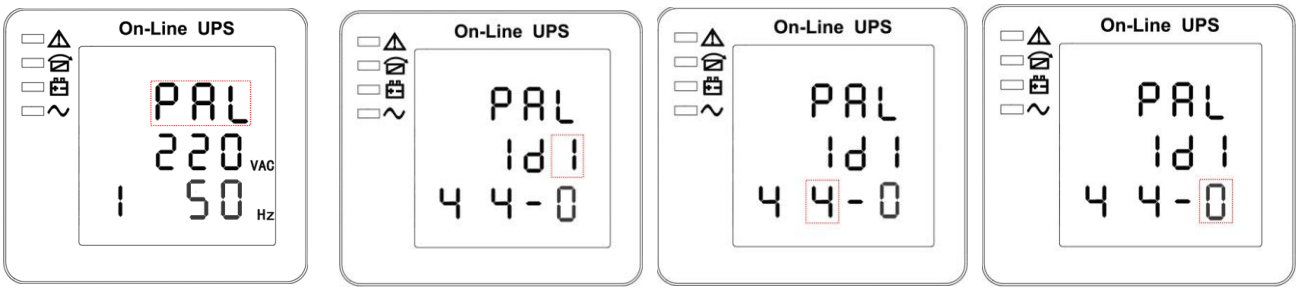

4) Turn off the input breaker of Unit 1, and make sure the UPS is off. Turn on the input breaker of Unit 2,access the LCD setting interface, setting the parallel working mode, ID（NO.2）, parallel 4 units, redundant number .The other setting are the same as UPS 1 operation.

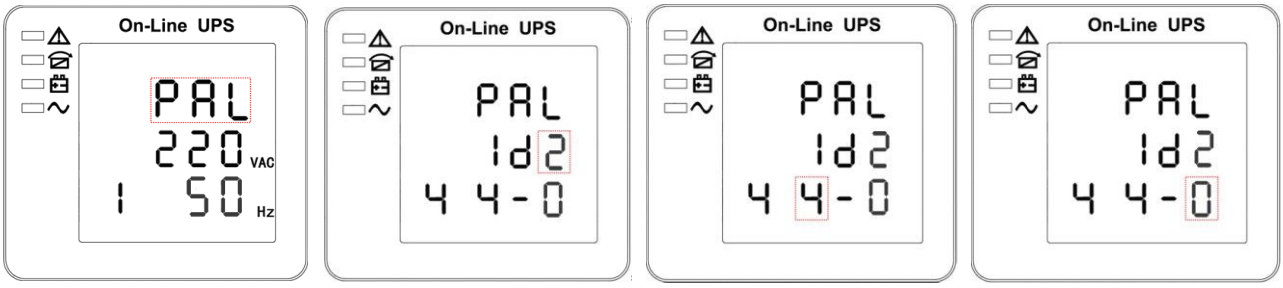

5) For Unit 3 and Unit 4 UPS, the operation setting are all the same as Unit 1 and 2.
6) Turn on Bypass/input/output breaker of all the paralleled UPS, then confirm all the setting are correct. Each UPS has their owed different ID.
7) There are only one master in parallel system .The one has a dot behind parallel mode is the master. You can turn on all the UPS after confirm all the setting are correct.

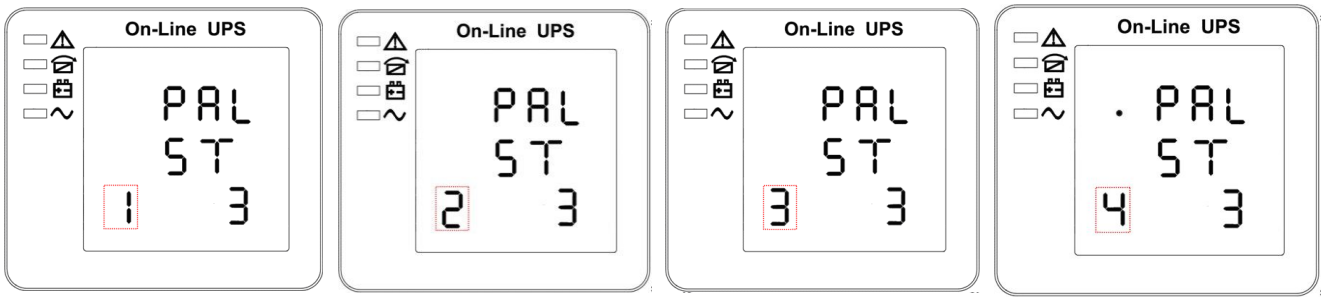

8) Turn on all the battery breaker and confirm the parameter (V/I) are normal.
9) Connected the Load, and check whether the output current are balance.

Switch on and off the utility breaker to test all the UPS converters system from Utility to battery and restored function are working find

SEC.RU | Короткий путь к информации Скачано с sec.ru

4.6 Display Messages/Troubleshooting

This section lists the event and alarm messages that the UPS might display. The messages are listed in alphabetical order. This section is listed with each alarm message to help you troubleshoot problems .

Display messages

Operational Status and Mode(s)

item	Content Displayed	LED			
		alarm	Bps output	Bat. output	Mains output
1	Initialized	Extinguish	Extinguish	Extinguish	Extinguish
2	Standby Mode	Extinguish	Extinguish	X	Extinguish
3	No Output	Extinguish	Extinguish	X	Extinguish
4	Bypass Mode	Extinguish	Light	X	Extinguish
5	Utility Mode	Extinguish	Extinguish	X	Light
6	Battery Mode	Extinguish	Extinguish	Light	Extinguish
7	Battery Self-diagnostics	Extinguish	Extinguish	Light	Extinguish
8	Inverter is starting up	Extinguish	X	X	Extinguish
9	ECO Mode	Extinguish	X	X	X
10	EPO Mode	Light	Extinguish	X	Extinguish
11	Maintenance Bypass Mode	Extinguish	Extinguish	Extinguish	Extinguish
12	Fault Mode	Light	X	X	X

Note : “X”shows that it will determined by other conditions.

Alarm Information

Event log	UPS Alarm Warning	Buzzer	LED
1	Rectifier Fault	Beep continuously	Fault LED lit
2	Inverter fault(Including Inverter bridge is shorted)	Beep continuously	Fault LED lit
3	Inverter Thyristor short	Beep continuously	Fault LED lit
4	Inverter Thyristor broken	Beep continuously	Fault LED lit
5	Bypass Thyristor short	Beep continuously	Fault LED lit
6	Bypass Thyristor broken	Beep continuously	Fault LED lit
7	Fuse broken	Beep continuously	Fault LED lit
8	Parallel relay fault	Beep continuously	Fault LED lit
9	Fan fault	Beep continuously	Fault LED lit
10	Reserve	Beep continuously	Fault LED lit
11	Auxiliary power fault	Beep continuously	Fault LED lit
12	Initializtion fault	Beep continuously	Fault LED lit
13	P-Battery Charger fault	Beep continuously	Fault LED lit
14	N-Battery Charger fault	Beep continuously	Fault LED lit
15	DC Bus over voltage	Beep continuously	Fault LED lit
16	DC Bus below voltage	Beep continuously	Fault LED lit

SEC.RU | Короткий путь к информации Скачано с sec.ru

17	DC bus unbalance	Beep continuously	Fault LED lit
18	Soft start failed	Beep continuously	Fault LED lit
19	Rectifier Over Temperature	Twice per second	Fault LED lit
20	Inverter Over temperature	Twice per second	Fault LED lit
21	Input neutral loss	Twice per second	Fault LED lit
22	Battery reverse	Twice per second	Fault LED lit
23	Cable connection error	Twice per second	Fault LED lit
24	CAN comm. Fault	Twice per second	Fault LED lit
25	Parallel load sharing fault	Twice per second	Fault LED lit
26	Battery over voltage	Once per second	Fault LED blinking
27	Mains Site Wiring Fault	Once per second	Fault LED blinking
28	Bypass Site Wiring Fault	Once per second	Fault LED blinking
29	Output Short-circuit	Once per second	Fault LED blinking
30	Rectifier over current	Once per second	Fault LED blinking
31	Bypass over current	Once per second	BPS LED blinking
32	Overload	Once per second	INV or BPS LED blinking
33	No battery	Once per second	Battery LED blinking
34	Battery under voltage	Once per second	Battery LED blinking
35	Battery low pre-warning	Once per second	Battery LED blinking
36	Internal Communication Error	Once per 2 seconds	Fault LED blinking
37	DC component over limit.	Once per 2 seconds	INV LED blinking
38	Parallel Overload	Once per 2 seconds	INV LED blinking
39	Mains volt. Abnormal	Once per 2 seconds	Battery LED lit
40	Mains freq. abnormal	Once per 2 seconds	Battery LED lit
41	Bypass Not Available		BPS LED blinking
42	Bypass unable to trace		BPS LED blinking
43	Inverter on invalid		
44	Reserve		
45	inverter not on		
46	Output switch not ON	Once per 3 seconds	

4.7 Options

SNMP card: internal SNMP / external SNMP optional

- Loosen the 2 torque screws (on each side of the card).
- Carefully pull out the card. Reverse the procedure for re-installation

The slot called SNMP supports the MEGAtec protocol. We advise that NetAgent II-3 port is also a tool to remotely monitor and manage any UPS system

NetAgent II-3Ports supports the Modem Dial-in (PPP) function to enable the remote control via the internet when the network is unavailable.

SEC.RU | Короткий путь к информации Скачано с sec.ru

In addition to the features of a standard NetAgent Mini, NetAgent II has the option to add NetFeeler Lite to detect temperature, humidity, smoke and security sensors. Thus, making NetAgent II a versatile management tool. NetAgent II also supports multiple languages and is setup for web-based auto language detection.

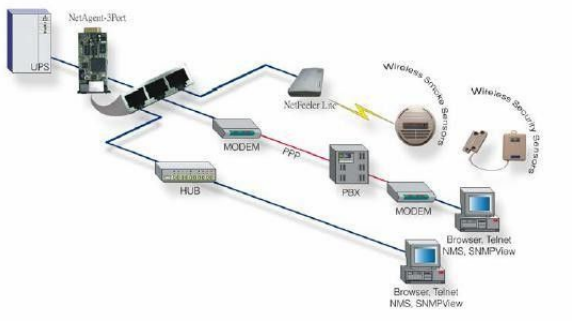

Typical topology of the UPS Network Management

Relay card

A 10-pin terminal is supported to offer the signals of Bypass, Utility Failure, Inverter On, Battery Low, UPS fault, UPS Alarm, and UPS Shutdown.

The relay communication card contains six dry contact outputs and one dry input. The inputs and outputs are factory programmed according to functions listed in the table

Table: Relay Contacts (communication card)

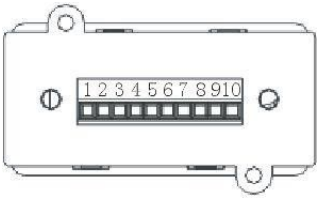

Port		Function
1	Output	Utility Failure
2		Battery Low
3		Battery Low
4		On Bypass
5		UPS Fault
6		Inverter On
7		Main's voltage abnormal
8		COM
9	Input	ON
10		OFF

CAUTION!

The output contacts numbers for a second relay board installed will be 1 to 7. Contacts are NO (normally open) type.

Available at no charge in any of Overview of the relay card

SEC.RU | Короткий путь к информации Скачано с sec.ru

Appendix 1 Specifications

MODEL		6kVA	10kVA
Capacity (VA/Watts)		6k/6k	10k/10k
INPUT			
Nominal voltage		380/400/415Vac,(3Ph+N+PE) 220/230/240Vac,(L+N+PE)	
Operating voltage range		208~478Vac	
Operating frequency range		40Hz-70Hz	
Power factor		≥0.99	
Harmonic distortion (THDi)		3% (100% non-linear load)	
Bypass voltage range		Max. voltage:220V: +25%(optional +10%,+15%,+20%) ; 230V: +20%(optional +10%,+15%) ; 240V: +15%(optional +10%) Min. voltage: -45% (optional -20%,-30%)	
Bypass Frequency range		Frequency protection range: ±10%	
Generator input		Support	
OUTPUT			
Rated voltage		220/230/240Vac,(L+N+PE)	
Voltage regulation		±1%	
Power factor		1.0	
Output frequency	Line Mode	±1%/±2%/±4%/±5%/±10% of the rated frequency(optional)	
	Bat. Mode	(50/60±0.2%)Hz	
Crest factor		3:1	
Harmonic distortion (THD)		⩽2% with linear load ⩽5% with non-linear load	
Efficiency		UP to 93.5%	
BATTERY			
Battery voltage		±96/108/120Vdc (16~20 pcs, 16 pcs define, Standard unit and 20 pcs no power derating; 18 pcs output power factor 0.9; 16 pcs output power factor 0.8)	
Charge Current(A) (charge current can be set according to battery capacity installed)		Max. current 12A	Max. current 14A
SYSTEM FEATURES			
Transfer time		Utility to Battery : 0ms; Utility to bypass: 0ms	
Overload	Line Mode	Load⩽110%: last 60min, ⩽125%: last 10min, ⩽150%: last 1min, ⩾ 150% turn to bypass mode immediately	
	Bat. Mode	Load⩽110%: last 10min, ⩽125%: last 1min, ⩽150%: last 5S, ⩾ 150% shut down UPS immediately	
	Bypass Mode	Breaker(Load < 125%, long-term operation)	
Short circuit		Hold Whole System	
Communication interface		RS232, RS485, Parallel, Intelligent Slot(SNMP card/ Relay card(optional)), BMS (optional),EPO port, Output port, MAINTAIN-AUXSWS port	
ENVIRONMENTAL			
Operating temperature		0℃～40℃	

SEC.RU | Короткий путь к информации Скачано с sec.ru

Storage temperature	-25℃～55℃	
Humidity range	0～95% (non-condensing)	
Altitude	< 1500m	
Noise level	<53dB	<55dB
PHYSICAL		
Dimension D×W×H (mm)	443x131(3U)x580 mm	
Net weight (kg)	27	28
STANDARDS		
Safety	IEC/EN62040-1,IEC/EN60950-1	
EMC	IEC/EN62040-2,IEC61000-4-2,IEC61000-4-3,IEC61000-4-4,IEC61000-4-5,IEC61000-4-6,IEC61000-4-8	

Appendix 2 Problems and Solution

In case the UPS cannot work normally, it might be wrong in installation, wiring or operation. Please check these aspects first. If all these aspects are checked without any problem, please consult with local agent right away and provide below information.

（1） Product model name and serial number.

（2） Try to describe the fault with more details, such as LCD display info, LED lights status, etc.

Read the user manual carefully, it can help a lot for using this UPS in the right way. Some FAQ (frequently asked questions) may help you to troubleshoot your problem easily.

No.	Problem	Possible reason	Solution
1	Utility is connected but the UPS cannot be powered ON.	Input power supply is not connected; Input voltage low; The input switch of the UPS is not switched on.	Measure if the UPS input voltage/frequency is within the window. Check if UPS input is switched on
2	Utility normal but Utility LED does not light on, and the UPS operates at battery mode	The input breakers of the UPS are not switched on; input cable is not well connected	Switch on the input breaker; Make sure the input cable is well connected.
3	The UPS does not indicate any failure, but output do not have voltage	Output cable does not well connected; Output breaker do not switch on	Make sure the output cable is well connected; Switch on the output breaker.
4	Utility LED is flashing	Utility voltage exceeds UPS input range.	If the UPS operates at battery mode, please pay attention to the remaining backup time needed for your system.
5	Battery LED is flashing but no charge voltage and current	Battery breaker does not switch on, or batteries are damaged, or battery is reversely connected. Battery number and capacity are not set correctly.	Switch on the battery breaker. If batteries are damaged, need to replace whole group batteries, Connect the battery cables correctly; Go to LCD setting of the battery number and capacity, set the correct data.
6	Buzzer beeps every 0.5 seconds and LCD display ¯output overload‖	Overload	Remove some load
7	Buzzer long beeps, LCD display ¯29 fault code	The UPS output is in short circuit	Make sure the load is not in short circuit, and then restart the UPS.

SEC.RU | Короткий путь к информации Скачано с sec.ru

8	The UPS only works on bypass mode	The UPS is set to ECO mode, or the transfer times to bypass mode are limited.	Set the UPS working mode to UPS type(non-parallel) or to reset the times of transferring to bypass or re-start the UPS
9	Cannot Black start	Battery switch is not properly closed: Battery fuse is not open: Or Battery low: Battery quantity set wrong; Power breaker in the rear panel not switch ON.	Close the battery switch: Change the fuse: Recharge the battery: Power ON the UPS with AC to set the battery quantity &quantity; Switch on the power breaker.
10	Buzzer beeps continuously and LCD indicates 1,3,5,9,15, etc fault codes	UPS is out of order	Consult with your local agent for repair

Appendix 3 RS232 communication port definition

Definition of Male port:

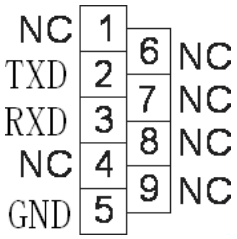

Connection between PC RS232 port and UPS RS232 port

PC RS232 port	UPS RS232 port	
Pin 2	Pin 2	UPS send,PC receive
Pin 3	Pin 3	PC send,UPS receive
Pin 5	Pin 5	ground

Available function of RS232

- Monitor UPS power status.
- Monitor UPS alarm info.
- Monitor UPS running parameters.
- Timing off /on

setting. RS-232 communication data format

Baud rate----------9600bps

Byte length----------8bit

End bit----------1bit

Parity check---------none

CAUTION!

RS232 and RS485 interface cannot be used at the same time, you can only use one of them at one time.

SEC.RU | Короткий путь к информации Скачано с sec.ru

Appendix 4 RS485 communication port definition

Definition of port:

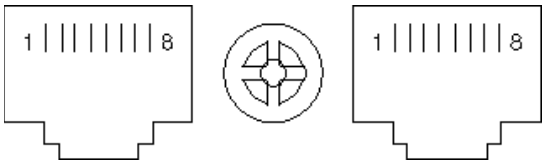

Connection between the Device's RS485 port and UPS RS485 port.

device(RJ45)	UPS(RJ45)	Description
Pin 1/5	Pin 1/5	485+ ¯A‖
Pin 2/4	Pin 2/4	485 - ¯B‖
Pin7	Pin7	+12Vdc
Pin8	Pin8	GND

Available function of RS485

- Monitor UPS power status.
- Monitor UPS alarm info.
- Monitor UPS running parameters.
- Timing off/on setting.
- Battery environment temperature monitoring.
- Charging voltage modulation depending on batteries

temperature Communication data format

Baud rate----------9600bps

Byte length----------8bit

End bit----------1bit

Parity check---------none

CAUTION!

RS232 and RS485 interface cannot be used at the same time, you can only use one of them at one time.

RS485 port pin7 is 12Vdc!

SEC.RU | Короткий путь к информации Скачано с sec.ru

Appendix 5 BAT_T communication port definition

Definition of port:

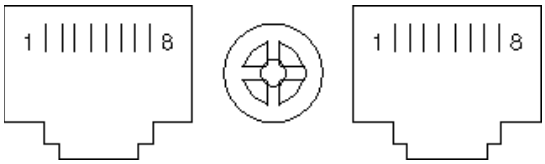

Connection between the Temperature senator RJ45 port and UPS RJ45 port.

Temperature senator（RJ45)	UPS BAT_T（RJ45）	Description
Pin 1/5	Pin 1/5	TX
Pin 2/4	Pin 2/4	RX
Pin 7	Pin 7	12V
Pin 8	Pin 8	GND

Available function of BAT_T

- Battery environment temperature monitoring.
- Charging voltage modulation depending on batteries' temperature

.

SEC.RU | Короткий путь к информации Скачано с sec.ru

Appendix 6 Output port definition

Definition of port:

Connection diagram:

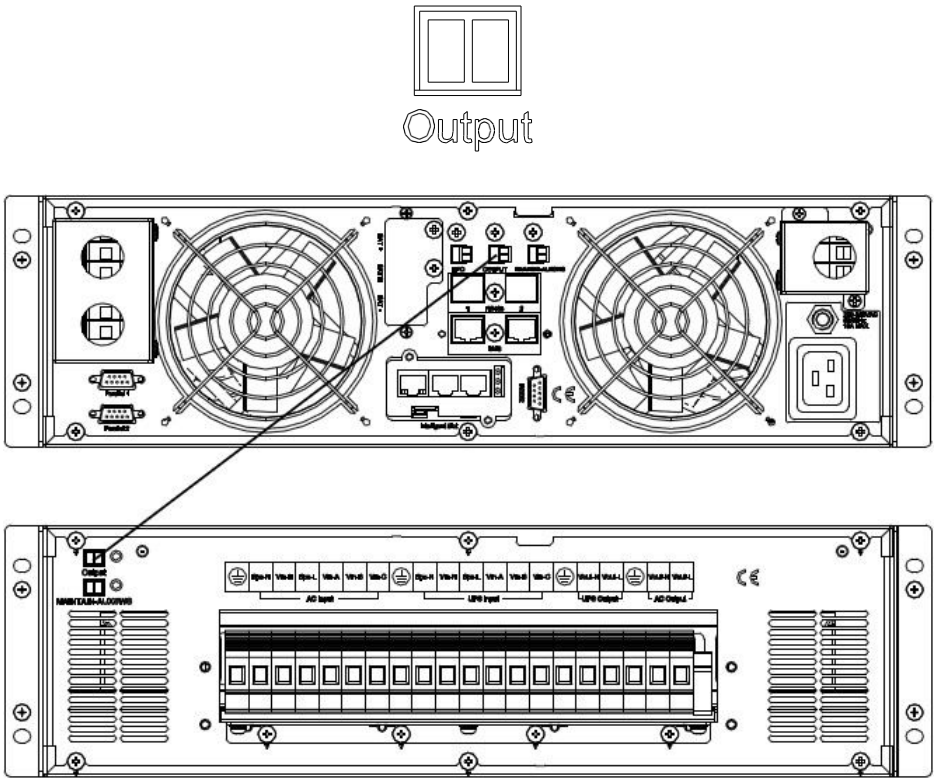

Function description:

Connect to the Output port on external PDU module (optional), UPS will detect the Output beaker status(ON/OFF) in PDU module to control the inverter output in parallel mode.

SEC.RU | Короткий путь к информации Скачано с sec.ru

Appendix 7 MAINTAIN-AUXSWS port definition

Definition of port:

Connection diagram:

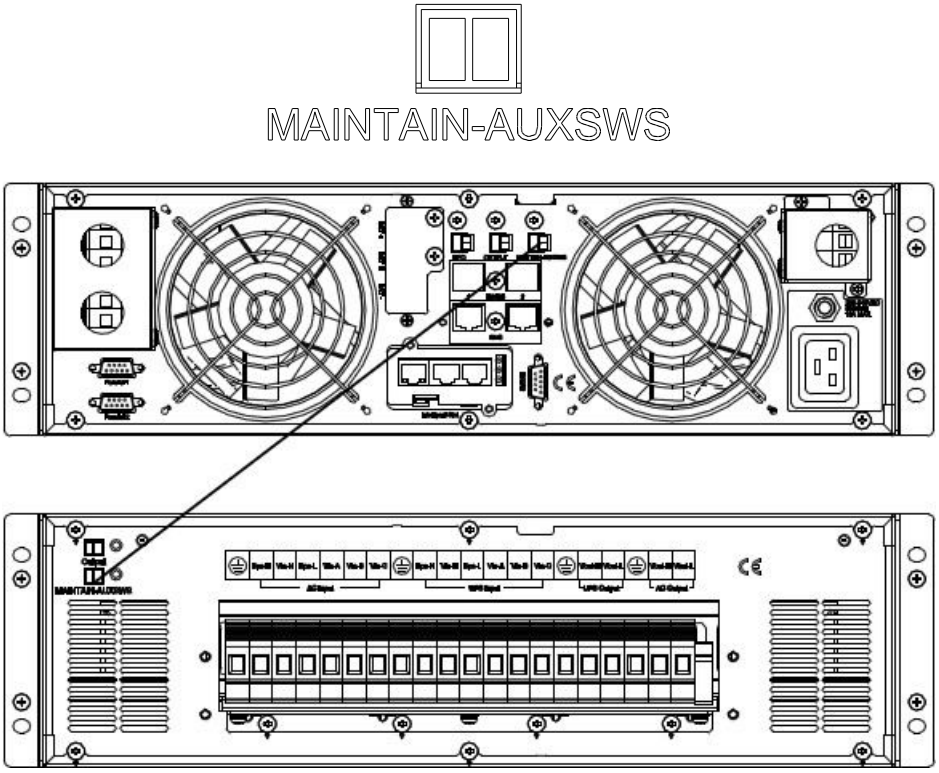

Function description:

Connect to the MAINTAIN-AUXSWS port on external PDU module (optional), UPS will turn off inverter and transfer to inner BYPASS when it detects the Maintenance Breaker is activated.

SEC.RU | Короткий путь к информации Скачано с sec.ru

Appendix 8 EPO instruction

Definition of port:

Connection diagram:

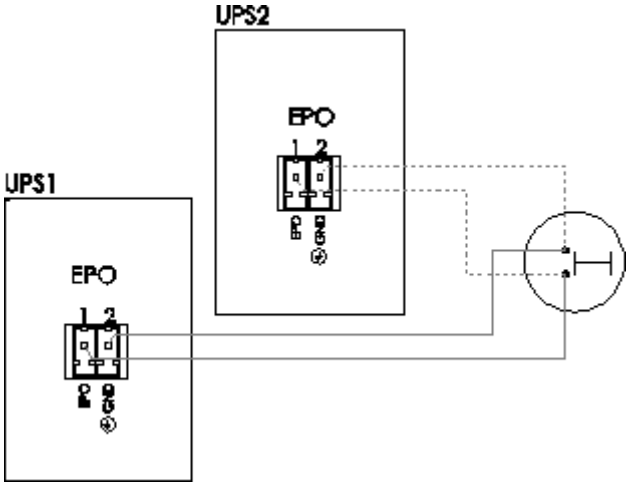

Connection between the button and UPS EPO port.

Button	UPS EPO	Description
Pin 1	Pin 1	EPO
Pin 2	Pin 2	GND

◆ A remote emergency stop switch (Dry contact signal and ¯normally open‖ - not provided) can be installed in a remote location and connection through simple wires to the EPO connector.

◆ The remote switch can be connected to several UPS's in a parallel architecture allowing the user to stops all units at once.

SEC.RU | Короткий путь к информации Скачано с sec.ru