РУКОВОДСТВО ПОЛЬЗОВАТЕЛЯ (EN)

ИСТОЧНИК БЕСПЕРЕБОЙНОГО ПИТАНИЯ SNR

СЕРИИ INTELLIGENT

SNR-UPS-ONRT-15-INTXL33
SNR-UPS-ONRT-25-INTXL33
SNR-UPS-ONRT-40-INTXL33

SEC.RU | Короткий путь к информации
Скачано с sec.ru

Preface

Usage

The manual contains information on installation, use, operation and maintenance of UPS. Please carefully read this manual prior to installation.

Users

Authorized Person

Note

- Our company is providing a full range of technical support and service. Customers can contact our local office or customer service center for help.
- The manual will update irregularly, due to the product upgrading or other reasons.
- Unless otherwise agreed, the manual is only used as the guide for users and any statements or information contained in this manual make no warranty expressed or implied.
- **The product shouldn't be used for any life sustaining system.**

SEC.RU | Короткий путь к информации Скачано с sec.ru

Content

Preface I
Usage I
Users I
Note I
1 Safety Precautions 1
Safety Message Definition 1
Warning Label 1
Safety Instruction 1
Debug & Operate 2
Maintenance & Replacement 2
Battery Safety 2
Disposal 3
2 UPS Structure and Introduction 4
2.1 Features 4
2.2 UPS Type and Configuration 4
2.2.1 UPS Type 4
2.2.2 UPS Configuration 5
2.3 Appearance and Components 5
2.3.1 Appearance 5
2.3.2 Components 5
2.4 UPS System Description 7
2.5 Operation Mode 7
2.5.1 Normal Mode 7
2.5.2 Battery Mode 8
2.5.3 Bypass Mode 8
2.5.4 Maintenance Mode (Manual Bypass) 8
2.5.5 ECO Mode 9
2.5.6 Auto-restart Mode 9
2.5.7 Frequency Converter Mode 9
3 Installation 10
3.1 Location 10
3.1.1 Installation Environment 10
3.1.2 Site Selection 10
3.1.3 Size and Weight 10
3.2 Unpacking and Inspection 10
3.3 Notes for Installation 11
3.4 Main Cabinet Installation 11
3.4.1 Tower Installation 11
3.4.2 Rack Installation 12

SEC.RU | Короткий путь к информации Скачано с sec.ru

3.5 Battery 12
3.6 Power Cables 13
3.6.1 Cables Specifications 13
3.6.2 Specifications for Power Cables Terminal 13
3.6.3 Circuit Breaker 14
3.6.4 Connecting Power Cables 14
3.7 Control and Communication Cables 15
3.7.1 Dry Contact Interface 15
3.7.2 Communication Interface 19
3.8 Power Distribution Mode 19
3.8.1 3-phase in and 3-phase out, common input 19
3.8.2 3-phase in and 3-phase out, dual input 19
3.8.3 3-phase in and 1 phase out, common input 20
3.8.4 3-phase in and 1 phase out, dual input 21
4 LCD Panel 23
4.1 Control and Operation Panel 23
4.2 LCD Screen 23
4.3 Menu Bar 24
4.3.1 Home 24
4.3.2 Data 24
4.3.3 Log 25
4.3.4 Setting 27
4.3.5 System 29
4.3.6 Operate 30
4.4 Sound Alarm（Buzzer） 31
5 Operation 32
5.1 UPS Start-up 32
5.1.1 Startup in normal mode 32
5.1.2 Start from battery 34
5.2 Procedure for Switching between Operation Modes 34
5.2.1 Switching the UPS from normal mode into battery mode 34
5.2.2 Switching the UPS from normal mode into bypass mode 34
5.2.3 Switching the UPS into normal mode from bypass mode 35
5.2.4 Switching the UPS into maintenance bypass mode from normal mode 35
5.2.5 Switching the UPS into normal mode from maintenance bypass mode 35
5.3 Battery Maintenance 35
5.4 Parallel UPS 36
5.4.1 Diagram of the parallel system 36
5.4.2 Parallel operation process 37

SEC.RU | Короткий путь к информации Скачано с sec.ru

6. Maintenance 40
6.1 Precautions 40
6.2 Instruction for maintaining UPS 40
6.3 Instruction for Maintaining Battery String 40
6.4 Maintenance of fan and dust filter 41
7. Product Specifications 44
7.1 Applicable Standards 44
7.2 Environmental Characteristics 44
7.3 Mechanical Characteristics 44
7.4 Electrical Characteristics 45
7.4.1 Electrical Characteristics (Input Rectifier) 45
7.4.2 Electrical Characteristics (Intermediate DC Link) 45
7.4.3 Electrical Characteristics (Inverter Output) 45
7.4.4 Electrical Characteristics (Bypass Mains Input) 46
7.5 Efficiency 47
7.6 Display and Interface 47

SEC.RU | Короткий путь к информации Скачано с sec.ru

1 Safety Precautions

This manual contains information concerning the installation and operation of UPS. Please carefully read this manual prior to installation.
The UPS cannot be put into operation until it is commissioned by engineers approved by the manufacturer (or its agent). Not doing so could result in personnel safety risk, equipment malfunction and invalidation of warranty.

Safety Message Definition

Danger: Serious human injury or even death may be caused, if this requirement is ignored.
Warning: Human injury or equipment damage may be caused, if this is requirement is ignored.
Attention: Equipment damage, loss of data or poor performance may be caused, if this requirement is ignored.
Commissioning Engineer: The engineer who installs or operates the equipment should be well trained in electricity and safety, and familiar with the operation, debug, and maintenance of the equipment.

Warning Label

The warning label indicates the possibility of human injury or equipment damage, and advised the proper step to avoid the danger. In this manual, there are three types of warning labels as below.

Labels	Description
Danger	Serious human injury or even death may be caused, if this requirement is ignored.
Warning	Human injury or equipment damage may be caused, if this requirement is ignored.
Attention	Equipment damage, loss of data or poor performance may be caused, if this requirement is ignored.

Safety Instruction

Danger	✧ Performed only by commissioning engineers. ✧ This UPS is designd for commercial and industrial applications only, and is not intended for any use in life-support devices or system.
Warning	✧ Read all the warning labels carafully before operation, and follow the instructions.
	✧ When the system is running , do not touch the surface with this label, to avoid any hurt of scald.
	✧ ESD sensitive components inside the UPS, anti-ESD measure should be taken before handling.

Move & Installation

Danger	✧ Keep the equipment away from heat source or air outlets. ✧ In case of fire, use dry powder extinguisher only, any liquid extinguisher can result in electric shock.

SEC.RU | Короткий путь к информации Скачано с sec.ru

Warning	✧ Don't start the system if any damage or abnormal parts founded. ✧ Contacting the UPS with wet material or hands may be subject to electric shock.
Attention	✧ Use proper facilities to handle and install the UPS. Shielding shoes, protective clithes and other protective facilities are necessary to aviod injury. ✧ During positioning, keep the UPS way from shock or vibration. ✧ Install the UPS in proper environment, more detail in section 2.3.

Debug & Operate

Danger	✧ Make sure the grounding cable is well connected before connecting the power cables, the grounding cable and neutral cable must be in accordance with the local and national codes practice. ✧ Before moving or re-connecting the cables, make sure to cut off all the input power sources, and wait for at least 10 minutes for internal discharge. Use a multi-meter to measure the voltage on terminals and ensure the voltage is lower than 36V before operation.
Attention	✧ The earth leakage current of load will be carried by RCCB OR RCD. ✧ Initial check and inspection should be performed after long time storing of UPS.

Maintenance & Replacement

Danger	✧ All the equipment maintenance and servicing procedures involving internal access need special tools and should be carried out only by trained personnel. The components that can be accessed by opening the protective cover with tools cannot be maintenance by user. ✧ This UPS full complies with "IEC62040-1-1-General and safety requirements for use in operator access area UPS". Dangerous voltages are present within the battery box. However, the risk of contact with these high voltages is minimized for non-service personnel. Since the component with dangerous voltage can only be touched by opening the protective cover with a tool, the possibility of touching high voltage component is minimized. No risk exists to any personnel when operating the equipment in the normal manner, following the recommended operating procedures in this manual.

Battery Safety

Danger	✧ All the battery maintenance and servicing procedures involving internal access need special tools or keys and should be carried out only by trained personnel. ✧ When connected together, the battery terminal voltage will exceed 400Vdc and is potentially lethal. ✧ Battery manufacturers supply details of the necessary precautions to be observed when working on, or in the vicinity of a large bank of battery cells. These precautions should be followed implicitly at all times. Particular attention should be paid to the recommendations concerning local environmental conditions and the provision of protective clothing, first aid and fire-fighting facilities. ✧ Ambient temperature is a major factor in determining the battery capacity and life. The nominal operating temperature

SEC.RU | Короткий путь к информации Скачано с sec.ru

	of battery is 20℃. Operating above this temperature will reduce the battery life. Periodically change the battery according to the battery user manuals to ensure the back-up time of UPS. ✧ Replace the batteries only with the same type and the same number, or it may cause explosion or poor performance. ✧ When connecting the battery, follow the precautions for high-voltage operation before accepting and using the battery, check the appearance of the batteries. If the package is damaged, or the battery terminal is dirty, corroded or rusted or the shell is broken, deformed or has leakage, replace it with new product. Otherwise, battery capacity reduction, electric leakage or fire may be caused. ✧ Before operating the battery, remove the finger ring, watch, necklace, bracelet and any other metal jewelry. ✧ Wear rubber gloves. ✧ Eye protection should be worn to prevent injury from accidental electrical arcs. ✧ Only use tools (e.g. wrench) with insulated handles. ✧ The batteries are very heavy. Please handle and lift the battery with proper method to prevent any human injury or damage to the battery terminal. ✧ Don't decompose, modify or damage the battery. Otherwise, battery short circuit, leakage or even human injury may be caused. ✧ The battery contains sulfuric acid. In normal operation, all the sulfuric acid is attached to the separation board and plate in the battery. However, when the battery case is broken, the acid will leak from the battery. Therefore, be sure to wear a pair of protective glasses, rubber gloves and skirt when operating the battery. Otherwise, you may become blind if acid enters your eyes and your skin may be damaged by the acid. ✧ At the end of battery life, the battery may have internal short circuit, drain of electrolytic and erosion of positive/negative plates. If this condition continues, the battery may have temperature out of control, swell or leak. Be sure to replace the battery before these phenomena happen. ✧ If a battery leaks electrolyte, or is otherwise physically damaged, it must be replaced, stored in a container resistant to sulfuric acid and disposed of in accordance with local regulations. ✧ If electrolyte comes into contact with the skin, the affected area should be washed immediately with water.

Disposal

Warning	✧ Dispose of used battery according to the local instructions.

SEC.RU | Короткий путь к информации Скачано с sec.ru

2 UPS Structure and Introduction

The intelligent rack-mounted UPS series products adopt online double conversion design, based on DSP full digital control, to provide a stable and uninterrupted power supply for important loads, which can eliminate surges, instantaneous high voltage, instantaneous low voltage, and "Power pollution" such as wire noise and frequency offset, provide customers with high-efficiency and high-power-density power supply guarantees.

2.1 Features

This product contains the following features:
1) Stronger load capacity, output power factor is 1;
2) Compatible with 3/3 and 3/1 operation mode (40K does not support 3/1 mode);
3) Can be inserted into a standard server rack;
4) With parallel function, up to 3+1 parallel redundant power supply;
5) The full load efficiency of the whole system reaches more than 95%, and the half load efficiency reaches 95.5%
6) The height is 3U for 10-25kVA, while the 30-40kVA is 4U, and supports tower installation to meet different requirements of users;
7) The operation panel adopts a 5-inch LCD screen display, which is convenient for users to observe the working status and parameters of UPS more intuitively;
8) Standard with RS232 port (while 30-40kVA standard with USB), RS485 port, cold start, dry contact; optional with LBS, parallel card, USB, SNMP card;
9) The number of batteries can be set from 32 to 44, and a variety of battery management parameters can be set. The maximum charging power is 20% of the output power;
10) Fully digital and intelligent battery management function to extend battery life;
11) With fan failure self-check and automatic identification functions
12) With intelligent fans design, the fans speed can be automatically adjusted according to the load status, reducing power consumption and noise;
13) Provide EPO interface, realize remote shutdown function, make operation more convenient;
14) Using DSP full digital control technology, the system is highly stable, with self-protection and fault diagnosis capabilities.

2.2 UPS Type and Configuration

2.2.1 UPS Type

The UPS types are shown in Table 2-1.

Table 2-1 UPS Type

Model	Type
10kVA	Rack-mounted 10kVA UPS
15kVA	Rack-mounted 15kVA UPS
20kVA	Rack-mounted 20kVA UPS
25kVA	Rack-mounted 25kVA UPS
30kVA	Rack-mounted 30kVA UPS
40kVA	Rack-mounted 40kVA UPS

SEC.RU | Короткий путь к информации Скачано с sec.ru

2.2.2 UPS Configuration

The UPS configurations are shown in Table 2-2.

Table 2-2 UPS Configuration

Item	Components	Quantity	Remark
10-40kVA	Dual Input	3	Standard
	Dry Contact	1	Standard
	Cold Start	1	Standard
	Parallel Board	1	Optional
	Power Distribution	1	Optional
	Battery pack	1	Optional

2.3 Appearance and Components

2.3.1 Appearance

The UPS appearance is shown as figure 2-1.

10-25kVA Appearance

30-40kVA Appearance

Figure 2-1 UPS Appearance

Note: Non-professionals are forbidden to open the UPS cover, otherwise there may be a danger of electric shock.

2.3.2 Components

Control and Operation Panel

SEC.RU | Короткий путь к информации Скачано с sec.ru

The UPS front panel components are shown in Figure 2-1. The control and operation panel is located on the UPS front panel, including LED indicators, LCD display and control buttons. For details, see "Control and Operation Panel ".

Rear Panel

As shown in Figure 2-2, the UPS rear panel contains the following components:

SNMP slot	Parallel board (optional)	RS485
RS232 (10-25kVA standard)	USB (30-40kVA standard, 10-25kVA optional)	Terminals
Dry contacts	LBS (Optional, only available for 20kVA-40Kva)	AUX.MBB (External maintenance bypass breaker status detection)

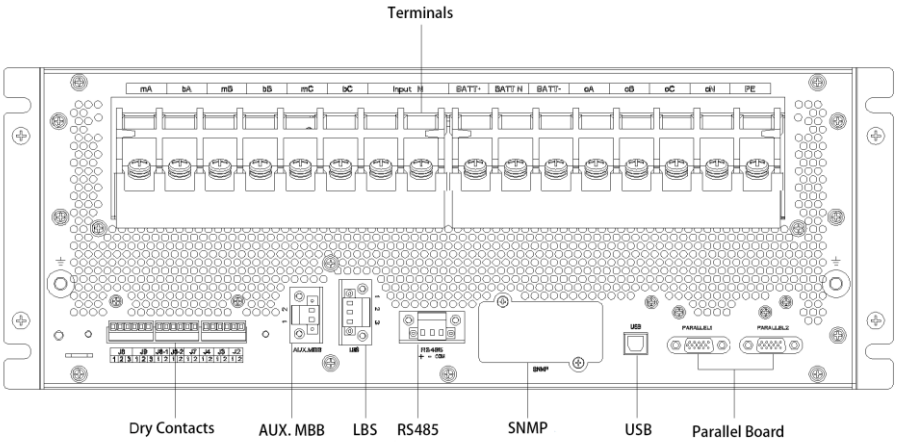

30-40kVA rear view

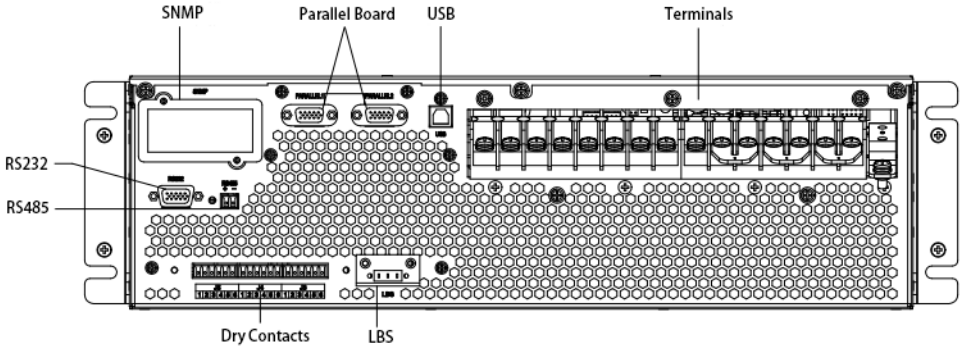

20-25kVA rear view

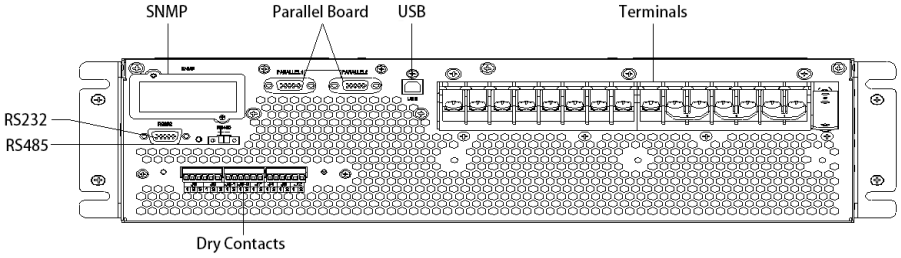

10-15kVA rear view

Figure 2- 2 UPS rear panel

SEC.RU | Короткий путь к информации Скачано с sec.ru

2.4 UPS System Description

The Rack UPS is configured by the following part: Rectifier, Charger, Inverter, Static bypass switch. One or several battery strings should be installed to provide backup energy once the utility fails. The UPS structures are shown in Figure 2-3.

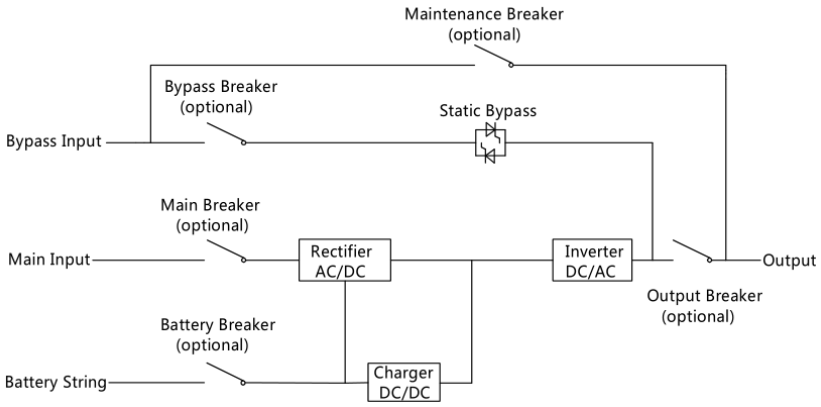

Figure 2-3 UPS Block Diagram

2.5 Operation Mode

The tower UPS is an on-line, double-conversion UPS that permits operation in the following modes:

- Normal mode
- Battery mode
- Bypass mode
- Maintenance mode (manual bypass)
- ECO mode
- Auto-restart mode
- Frequency Converter mode

2.5.1 Normal Mode

The inverter of UPS continuously supply the critical AC load. The rectifier/charger derives power from the AC main input source and supplies DC power to the inverter while simultaneously FLOAT or BOOST charging its associated backup battery. The Normal mode structure is shown in Figure 2-4.

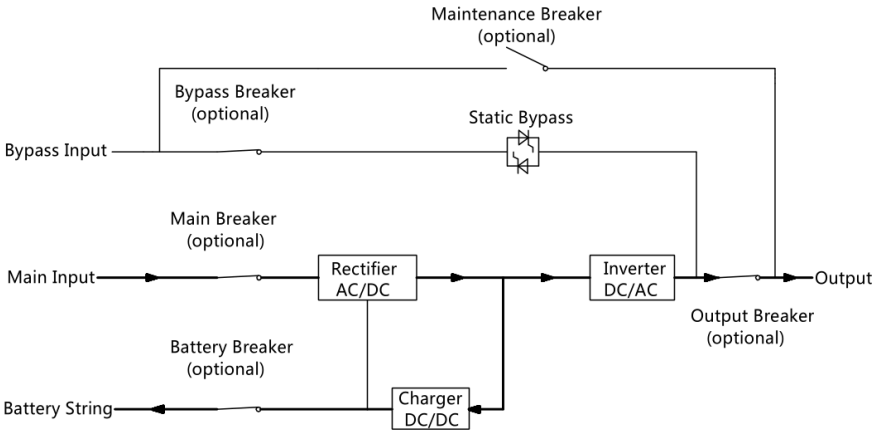

Figure 2-4 Normal mode operation diagram

Note:

The dark line indicates the route involved in this working mode, and the arrow indicates the direction of energy flow, the same goes for the following.

SEC.RU | Короткий путь к информации Скачано с sec.ru

2.5.2 Battery Mode

Upon failure of the AC main input power, the inverter of UPS, which obtains power from the battery, supply the critical AC load. There is no interruption in power to the critical load upon failure. After restoration of the AC mains input power, the" Normal mode" operation will continue automatically without the necessity of user intervention. The Battery mode structure is shown in Figure 2-5.

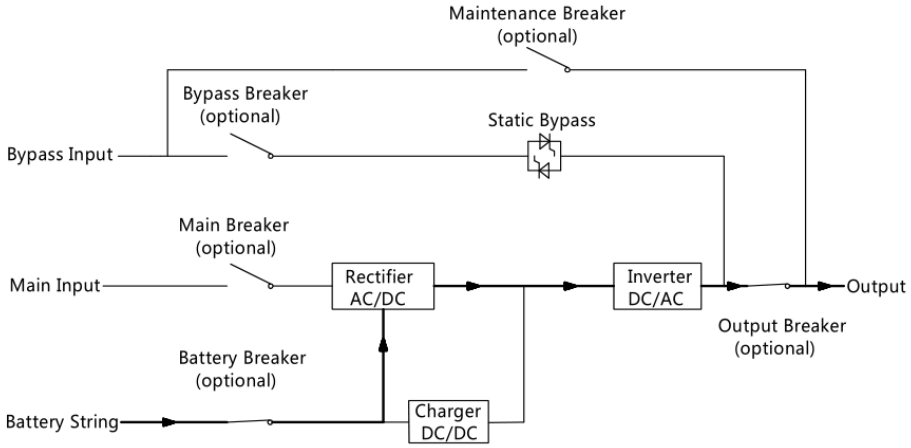

Figure 2-5 Battery Mode operation diagram

Note:

With the function of "Battery Cold Start", the UPS could start without utility. See more detail in section 5.1.2.

2.5.3 Bypass Mode

If the overload capacity of the inverter is exceeded under Normal mode, or if the inverter becomes unavailable for any reason, the static transfer switch will perform a transfer of the load from the inverter to the bypass source, with no interruption in power to the critical AC load. Should the inverter be asynchronous with the bypass, the static switch will perform a transfer of the load from the inverter to the bypass with power interruption to the load. This is to avoid large cross currents due to the paralleling of unsynchronized AC sources. This interruption is programmable but typically set to be less than 3/4 of an electrical cycle, e.g., less than 15ms (50Hz) or less than 12.5ms (60Hz). The action of transfer/re-transfer can also be done by the command through monitor. The Bypass mode structure is shown in Figure 2-6.

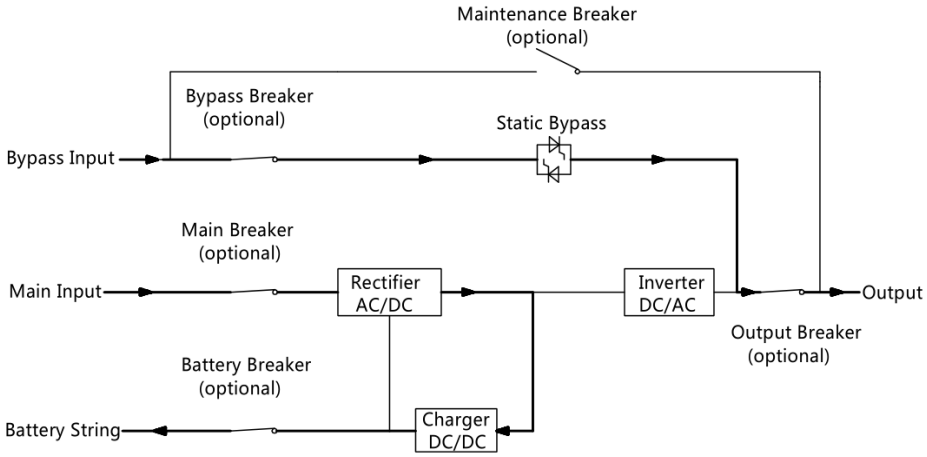

Figure 2-6 Bypass mode operation diagram

2.5.4 Maintenance Mode (Manual Bypass)

A manual bypass switch is available to ensure continuity of supply to the critical load when the

SEC.RU | Короткий путь к информации Скачано с sec.ru

UPS becomes unavailable e.g. during a maintenance procedure. The Maintenance mode structure is shown in Figure 2-7.

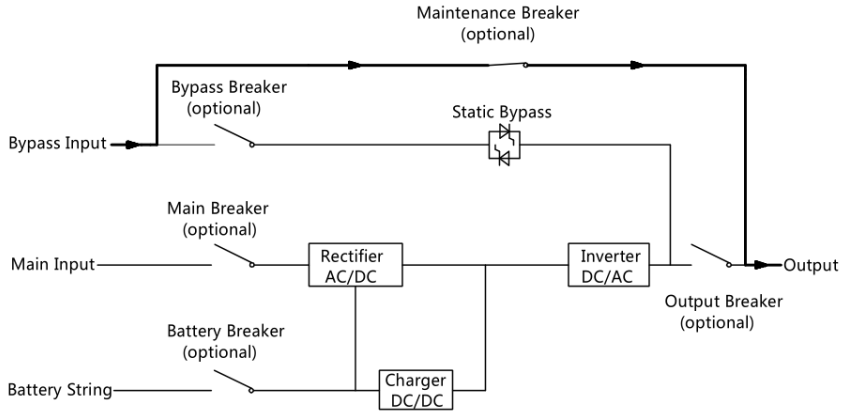

Figure 2-7 Maintenance mode operation diagram

Danger:

During Maintenance mode, dangerous voltages are present on the terminal of input, output and neutral, even with all the modules and the LCD turned off.

2.5.5 ECO Mode

To improve system efficiency, UPS system works in Bypass Mode at normal time, and the inverter is standby, when the utility from the bypass fails, the UPS will transfer to Battery Mode and the inverter powers the load. The ECO mode structure is shown in Figure 2-8.

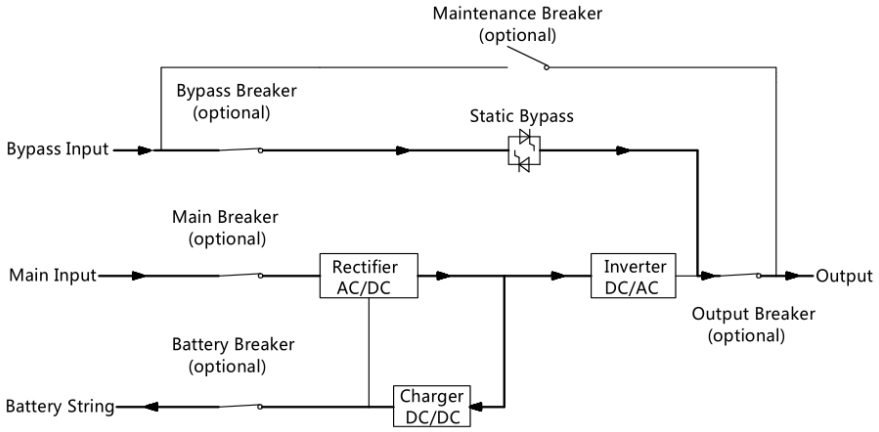

Figure 2-8 ECO Mode operation diagram

Note:

There is a short interruption time (less than 10ms) when transferring from ECO mode to battery mode, it must be sure that the interruption has no effect on loads.

2.5.6 Auto-restart Mode

The battery may become exhausted following an extended AC mains failure. The inverter shuts down when the battery reaches the End of Discharge Voltage (EOD). The UPS may be programmed to "System Auto Start Mode after EOD". The system starts after a delay time when the AC mains recover. The mode and the delay time are programmed by the commissioning engineer.

2.5.7 Frequency Converter Mode

By setting the UPS to "Frequency Converter Mode", the UPS could present a stable output of fixed frequency (50 or 60Hz), and the bypass static switch is not available.

SEC.RU | Короткий путь к информации Скачано с sec.ru

3 Installation

This chapter introduces UPS installation, including unpacking and inspection, main cabinet installation, cables connection.

3.1 Location

As each site has itself requirements, the installation instructions in this section are as a guide for the general procedures and practices that should be observed by the installing engineer.

3.1.1 Installation Environment

The UPS is intended for indoor installation and uses forced convection cooling by internal fans. Please make sure there is enough space for the UPS ventilation and cooling.
Keep the UPS far away from water, heat and inflammable and explosive corrosive material. Avoid installing the UPS in the environment with direct sunlight, dust, volatile gases, corrosive material and high salinity.
Avoid installing the UPS in the environment with conductive dirt.
The operating environment temperature for batteries is 20℃-25℃. Operating above 25℃ will reduce the battery life, and operation below 20℃ will reduce the battery capacity.
The battery will generate a little amount of hydrogen and oxygen at the end of charging; ensure the fresh air volume of the battery installation environment must meet EN50272-2001 requirements.
When external batteries are used, the battery circuit breakers (or fuses) must be mounted as close as possible to the batteries, and the connecting cables should be as short as possible.

3.1.2 Site Selection

Ensure the ground or installation platform can bear the weight of the UPS cabinet, batteries and battery racks.
No vibration and less than 5 degree inclination horizontally.
The equipment should be stored in a room so as to protect it against excessive humidity and heat sources.
The battery needs to be stored in dry and cool place with good ventilation. The most suitable storage temperature is 20℃ to 25℃.

3.1.3 Size and Weight

The dimension and weigh for the UPS cabinet is shown in Table 3-1

Table 3-1 Weight for the cabinet

Configuration	Dimension (W*D*H)mm	Weight
10kVA	438*780*130	25kg
15kVA	438*780*130	25kg
20kVA	438*780*130	30kg
25kVA	438*780*130	30kg
30kVA	438*700*174	41kg
40kVA	438*700*174	41kg

3.2 Unpacking and Inspection

1) Unpack the packaging and check the package contents. The shipping package contains:
- 1 UPS
- 1 user manual

2) Inspect the appearance of the UPS to see if there is any damage during transportation. Do not turn on the unit and notify the carrier and dealer immediately if there is any damage or lacking of some parts.
3) If you need tower type installation, you need to find the support block and the middle seat in advance. You need a support seat and 2 middle seats

SEC.RU | Короткий путь к информации Скачано с sec.ru

3.3 Notes for Installation

(1) The UPS must be installed in a location with good ventilation, far away from water, inflammable gas and corrosive agents.
(2) Ensure the air vents on the front and rear of the UPS are not blocked. Allow at least 0.5m of space on each side.
(3) Condensation to water drops may occur if the UPS is unpacked in a very low temperature environment. In this case it is necessary to wait until the UPS is fully dried inside out before proceeding installation and use. Otherwise there are hazards of electric shock.

NOTICE：

UPS operation in sustained temperature outside the range of 15-25℃ (59°-77℉) reduces battery life.

3.4 Main Cabinet Installation

Two installation modes are available: Tower installation and Rack installation, depending on available space and user considerations. You can select an appropriate installation mode according to the actual conditions.

3.4.1 Tower Installation

Various installation configurations are available: single UPS, single UPS with single or multiple battery cabinets. Their installation methods are all the same.
Please prepare support bases and spacers before installation

(1) Take out the support bases and spacers and then assemble the spacer and the support bases, shown as Figure 3-1.

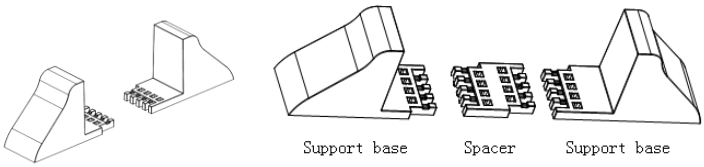

Figure 3-1 Support bases and spacers assembly

(2) Place the UPS on the support bases, shown as Figure 3-2.

Figure 3-2 Tower installation

(3) Remove the LOGO in the upper right corner, turn it 90 degrees counterclockwise, and then insert it.

SEC.RU | Короткий путь к информации Скачано с sec.ru

3.4.2 Rack Installation

Battery cabinets must be installed firstly because battery cabinets are too heavy. And two or more installation personnel are required to install them at the same time. Please install them from bottom to top.

(1) Install the guide rail

(2) Put the UPS and battery cabinet on the guide rail, fix the units to the service rack, shown as Figure 3-3.

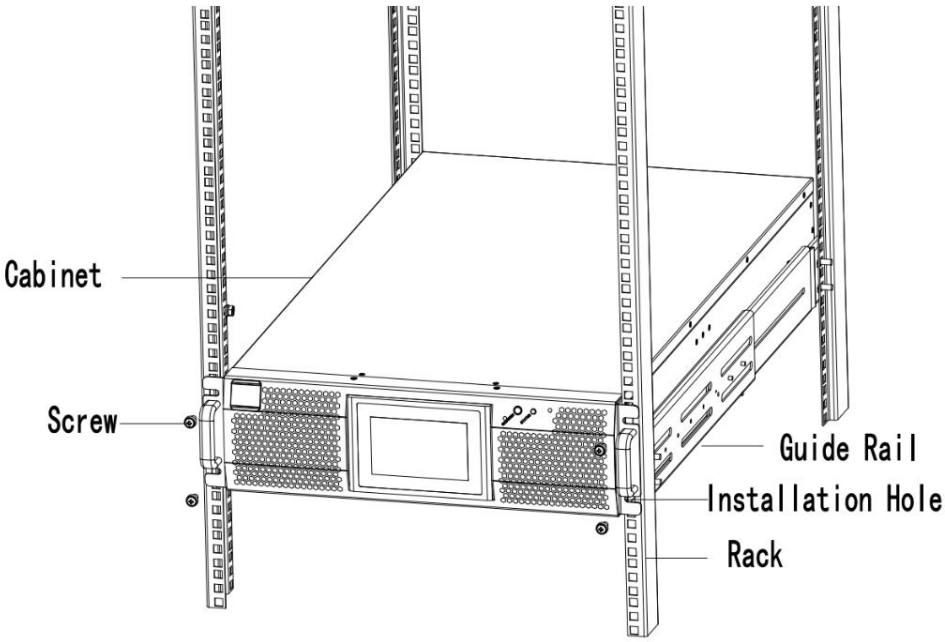

Figure 3-3 Rack Mounted Installation

3.5 Battery

Three terminals (positive, neutral, negative) are drawn from the battery group and connected to UPS system. The neutral line is draw from the middle of the batteries in series (See Figure 3-4)

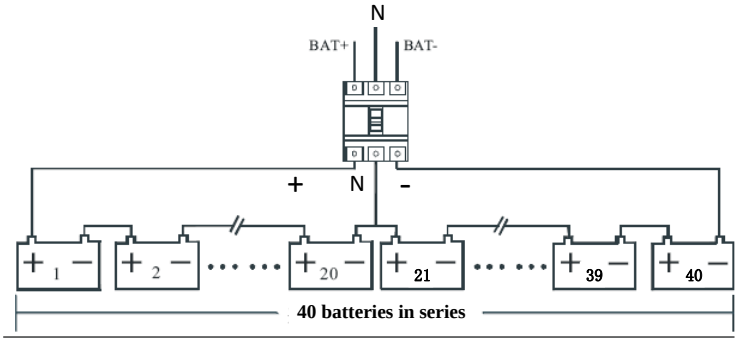

Figure 3-4 Battery connection diagram

Danger:

The battery terminal voltage is of more than 400Vdc, please follow the safety instructions to avoid electric shock hazard.

Ensure the positive, negative, neutral electrode is correctly connected from the battery unit terminals to the breaker and from the breaker to the UPS system.

SEC.RU | Короткий путь к информации Скачано с sec.ru

3.6 Power Cables

3.6.1 Cables Specifications

The UPS power cables are recommended in Table 3-2.

Table 3-2 Recommended cables for power cables

Contents	Main Input				Bypass Input				Output				Battery			PE
30kVA/40KVA (3/3)	A	B	C	N	A	B	C	N	A	B	C	N	BAT+	N	BAT-	PE
Current (A)	75	75	75	75	60	60	60	60	60	60	60	104	125	125	125	75
Size (mm²)	**16**	**16**	**16**	**16**	**16**	**16**	**16**	**16**	**16**	**16**	**16**	**25**	**25**	**25**	**25**	**16**
25KVA (3/3)	A	B	C	N	A	B	C	N	A	B	C	N	BAT+	N	BAT-	PE
Current (A)	45	45	45	45	38	38	38	38	38	38	38	66	78	78	78	45
Size (mm²)	**10**	**10**	**10**	**10**	**10**	**10**	**10**	**10**	**10**	**10**	**10**	**16**	**16**	**16**	**16**	**10**
15KVA (3/3)	A	B	C	N	A	B	C	N	A	B	C	N	BAT+	N	BAT-	PE
Current (A)	27	27	27	27	23	23	23	23	23	23	23	40	47	47	47	27
Size (mm²)	**6**	**6**	**6**	**6**	**6**	**6**	**6**	**6**	**6**	**6**	**6**	**10**	**10**	**10**	**10**	**6**
20KVA (3/1)	A	B	C	N	A		N		A		N		BAT+	N	BAT-	PE
Current (A)	36	36	36	36	91		91		91		91		63	63	63	36
Size (mm²)	**10**	**10**	**10**	**10**	**25**		**25**		**25**		**25**		**16**	**16**	**16**	**10**
10KVA (3/1)	A	B	C	N	A		N		A		N		BAT+	N	BAT-	PE
Current (A)	18	18	18	18	46		46		46		46		32	32	32	18
Size (mm²)	**6**	**6**	**6**	**6**	**6**		**6**		**6**		**6**		**6**	**6**	**6**	**10**

Note:

The recommended cable section for power cables are only for the situations described below:

- *Ambient temperature: 30℃.*
- *AC loss less than 3%, DC loss less than1%, The length of the AC power cables are no longer than 50 m and the length of the DC power cables are no longer than 30 m.*
- *For 90 ℃ copper conductor flexible cables, when the external conditions change, please refer to IEC60364-5-52 and relevant local codes for verification. The current values in the table are based on 380V. For the 400V rated voltage, the current value needs to be multiplied by 0.95; for the 415V rated voltage, the current value needs to be multiplied by 0.92.*
- *The cross-section of neutral lines need to be increased to 1.5~1.7 times of the value listed above when the main loads are non-linear load.*

3.6.2 Specifications for Power Cables Terminal

Specifications for power cables connector are listed as Table 3-3.

Table 3-3 Requirements for power terminal

SEC.RU | Короткий путь к информации Скачано с sec.ru

Port	Connection	Bolt	Bolt Aperture	Torque Moment
Mains input	Cables crimped OT terminal	M5	5mm	3Nm
Bypass Input	Cables crimped OT terminal	M5	5mm	3Nm
Battery Input	Cables crimped OT terminal	M5	5mm	3Nm
Output	Cables crimped OT terminal	M5	5mm	3Nm
PE	Cables crimped OT terminal	M5	5mm	3Nm

3.6.3 Circuit Breaker

The external circuit breakers (CB) for the system are recommended in Table 3-4.

Table 3-4 Recommended CB

Model	Input	Bypass	Output	Battery
25KVA (3/3)	63A/3P	63A/3P	63A/4P	DC 100A/3P
15KVA (3/3)	63A/3P	63A/3P	63A/4P	DC 50A/3P
20KVA (3/1)	63A/3P	125/1P	125/2P	DC 80A/3P
10KVA (3/1)	32A/3P	63A/1P	63A/2P	DC 40A/3P

Attention:

The CB with RCD (Residual Current Device) is not suggested for the system.

3.6.4 Connecting Power Cables

(1) Verify that all the switches of the UPS are completely open and the UPS internal maintenance bypass switch is open. Attach necessary warning signs to these switches to prevent unauthorized operation.

(2) Open the back door of the cabinet, remove the plastic cover. The input and output terminal, battery terminal and protective earth terminal are shown in Figure 3-5

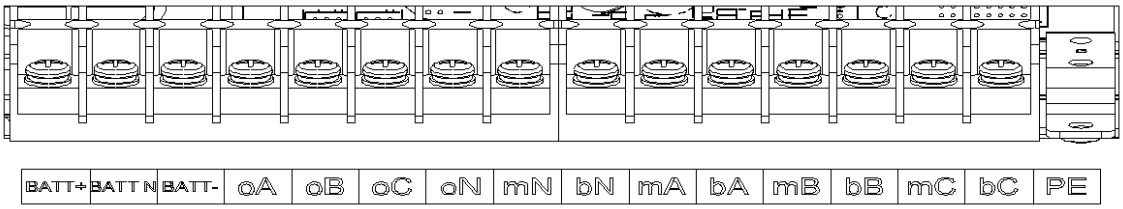

Figure 3-5 Connection terminals

(3) Connect the protective earth wire to protective earth terminal (PE).

(4) Connect the AC input supply cables to the main input terminal and AC output supply cables to the output terminal.

(5) Connect the battery cables to the battery terminal.

(6) Check to ensure there is no mistake and re-install all the protective covers.

Note:

mA, mB, mC standard for Main input phase A, B and C; bA, bB, bC standard for Bypass Input phase A, B and C.

Attention:

SEC.RU | Короткий путь к информации Скачано с sec.ru

The operations described in this section must be performed by authorized electricians or qualified technical personnel. If you have any difficulties, contact the manufacturer or agency.

Warning:

- *When connecting power cables, follow the torque listed in Table 3.3 to ensure the tightness of the wiring terminals and avoid potential safety hazards.*
- *Before wiring the UPS, confirm the position and status of the UPS input switch and the mains power distribution switch. Make sure that the switch is in the off state and attach a warning sign to prevent others from operating the switch.*

3.7 Control and Communication Cables

The rear panel of the cabinet provides dry contact interface (J2-J9) and communication interface (RS232, RS485, SNMP, Parallel card interface and USB port)，as it is shown in Figure 3-6.

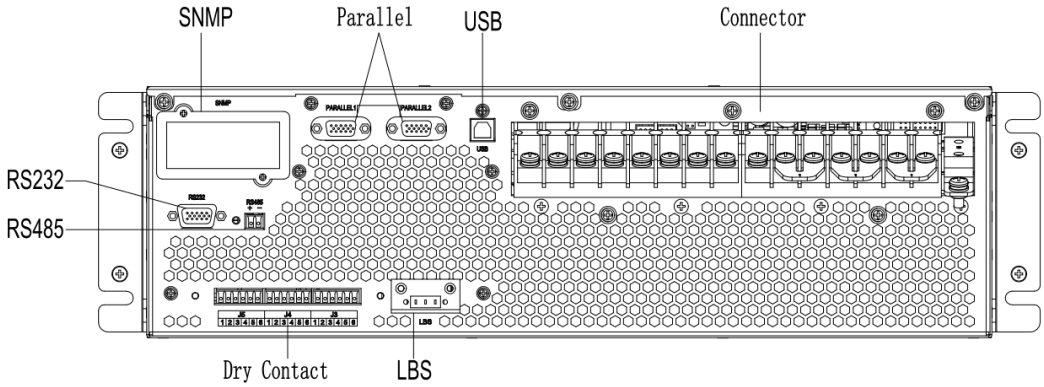

Figure 3-6 Dry contact &communication interface

3.7.1 Dry Contact Interface

Dry contact interface includes port J2-J11 and the functions of the dry contact are shown in Table 3-5.

Table 3-5 Functions of ports

Port		Name	Function description
J2-1		TEMP_BAT	Battery temperature detection
J2-2		TEMP_COM	Common terminal of temperature detection
J3-1		TEMP_ENV	Environmental temperature detection
J3-2		TEMP_COM	Common terminal of temperature detection
J4-1		+24V_DRY	Trigger EPO when disconnect with J4-2
J4-2		REMOTE_EPO_NC	+24V
J6-1	1	BCB _ Drive	Output dry contact, function is settable. Default: Battery trip signal (It is valid in the case of EPO and EOD)
	2	GND_COMM	Ground for +24V
J6-2	1	BCB _ Status	Input dry contact, function is settable. Default: BCB Status and BCB Online, (Alert no battery when BCB Status is invalid).
	2	GND_COMM	Ground for +24V
J7-1		BCB _ Online	Input dry contact, function is settable. Default: BCB Status and BCB Online (Alert no battery when BCB Status is invalid)

SEC.RU | Короткий путь к информации Скачано с sec.ru

J7-2	**GND_DRY**	Ground for +24V
J8-1	**BAT_LOW_ALARM_NC**	Output dry contact (Normally closed), function is settable. Default: Low battery alarming
J8-2	**BAT_LOW_ALARM_NO**	Output dry contact (Normally open), function is settable. Default: Low battery alarming
J8-3	**BAT_LOW_ALARM_GND**	Common terminal for J8-1 and J8-2
J9-1	**GENERAL_ALARM_NC**	Output dry contact, (Normally closed) function is settable. Default: Fault alarming
J9-2	**GENERAL_ALARM_NO**	Output dry contact, (Normally open) function is settable. Default: Fault alarming
J9-3	**GENERAL_ALARM_GND**	Common terminal for J9-1 and J9-2

Note:

The function for each port can be set by the monitor software.
The default function of each port is described as follows.

Battery and Environmental Temperature Detection Interface

The input dry contact J2 and J3 can detect the temperature of batteries and environment respectively, which can be used in environment monitoring and battery temperature compensation. Interfaces diagram for J2 and J3 are shown in Figure 3-7, the description of interface is in Table 3-6.

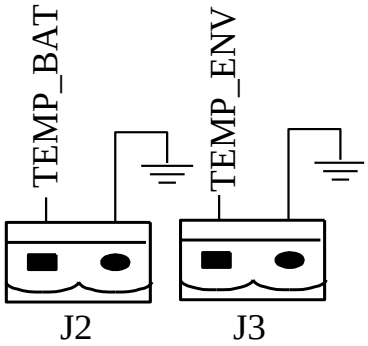

Figure 3-7 J2 and J3 for temperature detecting

Table 3-6 Description of J2 and J3

Port	Name	Function
J2-1	TEMP_BAT	Detection of battery temperature
J2-2	TEMP_COM	common terminal
J3-1	ENV_TEMP	Detection of environmental temperature
J3-2	TEMP_COM	common terminal

Note:

Specified temperature sensor is required for temperature detection (R25=5Kohm, B25/50=3275), please confirm with the manufacturer, or contact the local maintenance engineers when placing an order.

Remote EPO Input Port

J4 is the input port for remote EPO. It requires shorting NC and +24Vand disconnecting NO and +24V during normal operation, and the EPO is triggered when opening NC and +24V or shorting the NO and +24V. The port diagram is shown in Figure 3-8 and port description is shown in Table 3-7.

SEC.RU | Короткий путь к информации Скачано с sec.ru

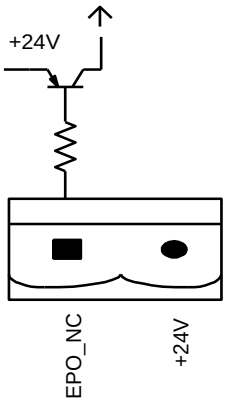

Figure 3-8 Diagram of input port for remote EPO

Table 3-7 Description of input port for remote EPO

Port	Name	Function
J4-1	REMOTE_EPO_NC	Trigger EPO when disconnect with J4-2
J4-2	+24V_DRY	+24V

When the UPS system is operating normally, it is necessary to short-circuit pin J4-1 and pin J4-2. If J4-2 and pin J4-1 are disconnected, the EPO will be triggered.

BCB Input Port

The default function of J6 and J7 are the ports of BCB. The port diagram is shown in Figure 3-9, and description is shown in Table 3-8.

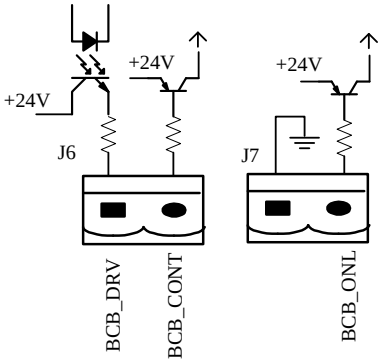

Figure 3-9 BCB Port

Table 3-8 Description of BCB port

Port		Name	Function
J6-1	1	BCB_DRIV	BCB contact drive, provides +24V voltage, 20mA drive signal
	2	GND_COMM	Ground for +24V
J6-2	1	BCB_Status	BCB contact status, connect with the normally open signal of BCB
	2	GND_COMM	Ground for +24V
J7-1		BCB_Online	BCB on-line input (normally open), BCB is on-line when the signal is connecting with J7-2
J7-2		GND_DRY	+24V GND

Battery Warning Output Dry Contact Interface

The default function of J8 is the output dry contact interface, which presents the battery warnings of low or excessive voltage, when the battery voltage is lower than set value, an auxiliary dry contact signal will be activated via the isolation of a relay. The interface diagram is shown in

SEC.RU | Короткий путь к информации Скачано с sec.ru

Figure 3-10, and description is shown in Table 3-19.

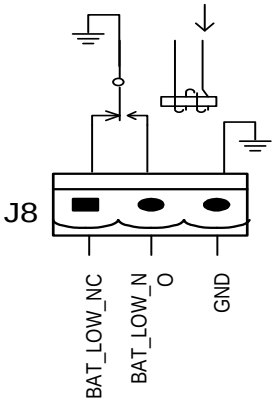

Figure 3-10 Battery warning dry contact interface diagram

Table 3-9 Battery warning dry contact interface description

Port	Name	Function
J8-1	BAT_LOW_ALARM_NC	Battery warning relay (normally closed) will be open during warning
J8-2	BAT_LOW_ALARM_NO	Battery warning relay (normally open) will be closed during warning
J8-3	BAT_LOW_ALARM_GND	Common terminal

General Alarm Output Dry Contact Interface

The default function of J9 is the general alarm output dry contact interface. When one or more warnings are triggered, an auxiliary dry contact signal will be active via the isolation of a relay. The interface diagram is shown in Figure 3-11, and description is shown in Table 3-10.

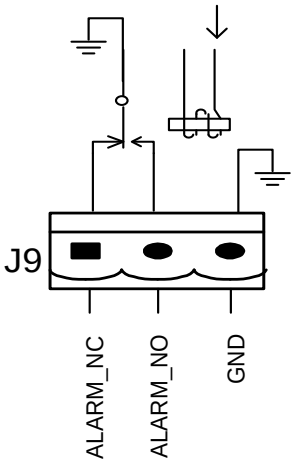

Figure 3-11 Integrated warning dry contact interface diagram

Table 3-10 General alarm dry contact interface description

Port	Name	Function
J9-1	GENERAL_ALARM_NC	Integrated warning relay (normally closed) will be open during warning
J9-2	GENERAL_ALARM_NO	Integrated warning relay (normally open) will be closed during warning
J9-3	GENERAL_ALARM_GND	Common terminal

SEC.RU | Короткий путь к информации Скачано с sec.ru

3.7.2 Communication Interface

RS232, RS485 and USB port: Provide serial data which can be used for commissioning and maintenance by authorized engineers or can be used for networking or integrated monitoring system in the service room.
SNMP: Used on site installation for communication (Optional).
Parallel card interface：Cabinet parallel (Optional).

3.8 Power Distribution Mode

Stand-alone UPS has two power distribution modes: using rack-mounted COP power distribution options or users connect the external MCB to distribute power by themself.
According to the needs of the user, distribution cable connection is divided into four types:
3-phase in and 3-phase out, common input;
3-phase in and 3-phase out, dual input;
3-phase in and 1-phase out, common input; (40K does not support)
3-phase in and 1-phase out, dual input. (40K does not support)

3.8.1 3-phase in and 3-phase out, common input

1、Use No.1 copper bar to connect mA and bA, mB and bB, mC and bC with No.1 copper bar, connect input A,B,C,N cables with mA, mB, mC, mN terminals.
2、Connect output A,B,C,N cables with oA, oB, oC, oN terminals.
3、Connect PE cable to PE terminal, as shown in Figure 3-12.

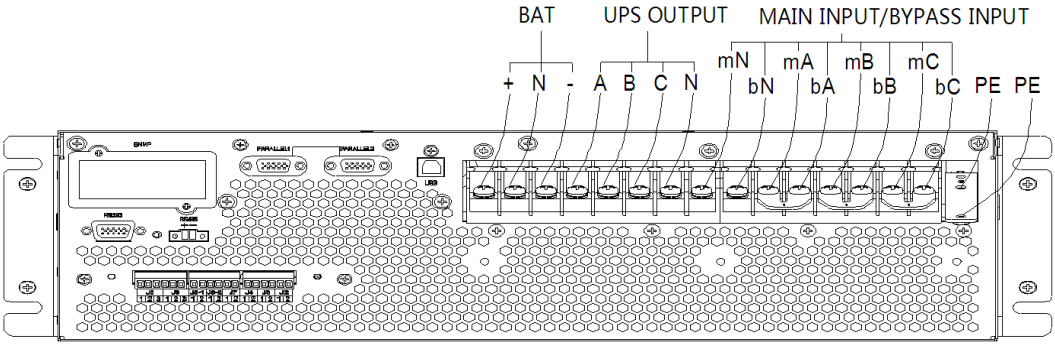

Figure 3-12 3 phases in 3 phases out, common input

3.8.2 3-phase in and 3-phase out, dual input

1、Connect main input A,B,C,N cables with mA, mB, mC, mN terminals.
2、Connect bypass input A,B,C,N cables with bA, bB, bC, bN terminals.
3、Connect output A,B,C,N cables with oA, oB, oC, oN terminals.
4、Connect PE cable to PE terminal, as shown in Figure 3-13.

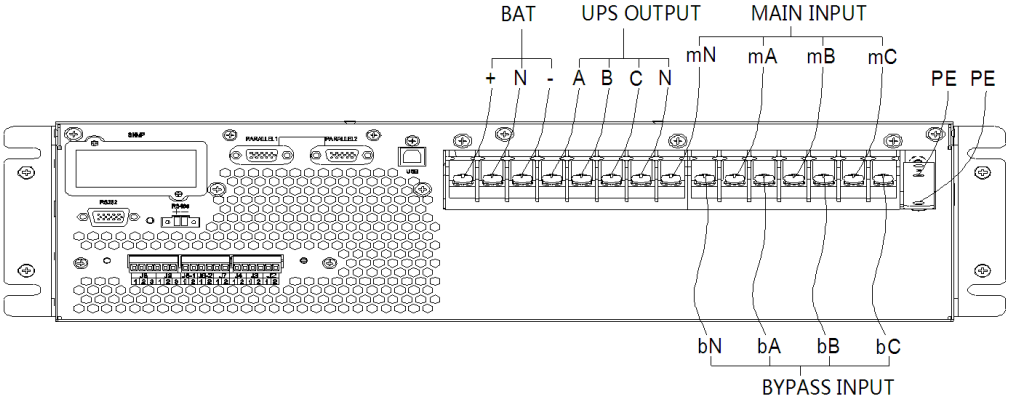

Figure 3-13 3-phase in and 3-phase out, dual input

SEC.RU | Короткий путь к информации Скачано с sec.ru

3.8.3 3-phase in and 1 phase out, common input

1. The default setting is 3-phase in and 3-phase out, if need to change the system into 3-phase in and 1 phase out, please operate as follows. (30K and 40K don't support)

a. Remove all copper bars, connect input cable only (no bypass/output/battery).As shown in Figure 3-14.

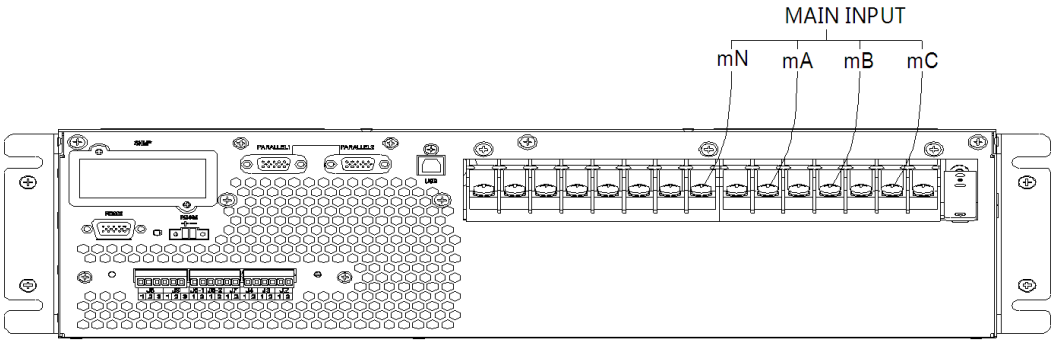

Figure 3-14 Main line input connection diagram

b. Unplug the shorted dry contact terminal J4 (EPO).

c. Close the external input breaker, connect the MTR software, and set the related parameters as Figure 3-15 below. Tick the box in front of the option "Out 3/1(1). Then completely cut off power and reboot to ensure settings working. (Only 10K and 20K machines support, 15K and 25K need to contact engineers to derate the capacity.)

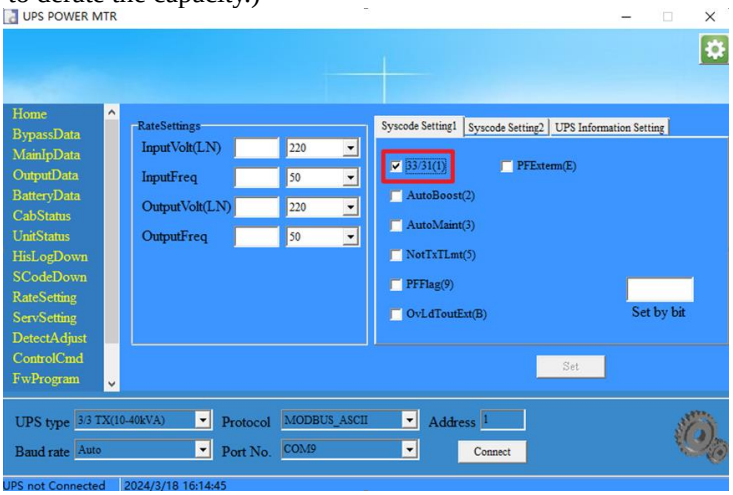

Figure 3-15 Setting interface of MTR software

2.Short-circuit mA, bA, bB and bC with No.6 copper bar; short-circuit BATN oN, bN and mN with No.7 copper bar; short-circuit oA, oB, oC with No.4 copper bar .As shown in figure 3-16.

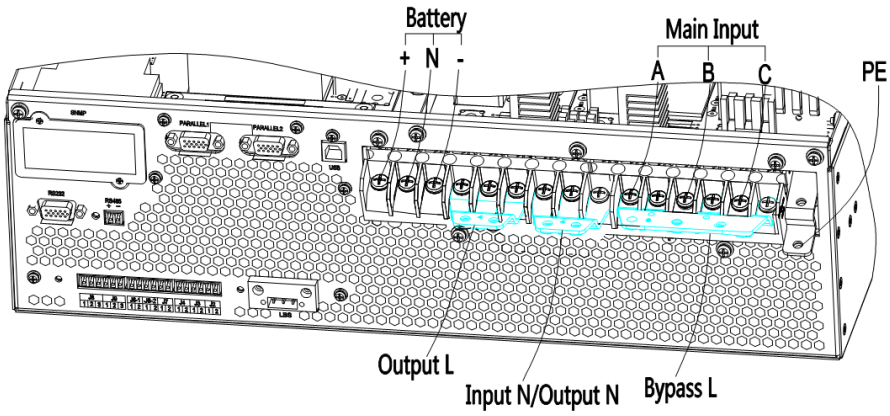

Figure 3-16 3-phase in and 1 phase out, common input

3. Fix the insulating film (accessory) to the No.6 copper bar as shown in figure 3-17, and fixed in the corresponding position with the plastic rivet, as shown in figure 3-18.

SEC.RU | Короткий путь к информации Скачано с sec.ru

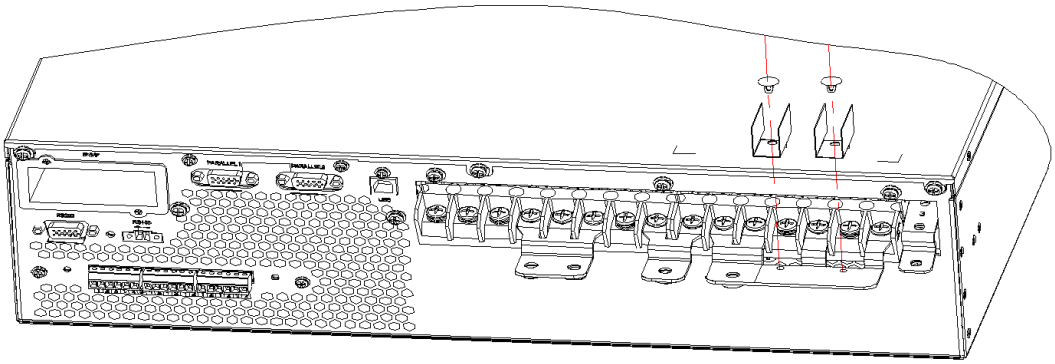

Figure 3-17 Fix insulation film

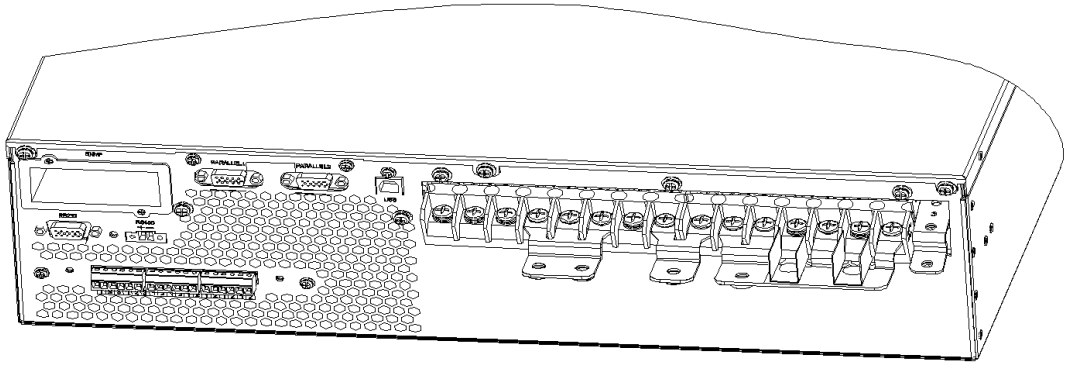

Figure 3-18 Graphic of insulation film fixed

4. Connect input phase A to No.6 copper bar, then connect input phase B and phase C to mB and mC.
5. Connect output cable to No.4 copper bar.
6. Connect bypass input N, output N, Main input N to No.7 copper bar.

3.8.4 3-phase in and 1 phase out, dual input

1. According to section 3.6.3, first step is to change system into 3 in 1 out system
2. As shown in Figure 3-19, short-circuit bA, bB and bC with No.5 copper bar; short-circuit oN, bN and mN with No.7 copper bar; short-circuit oA, oB and oC with No.4 copper bar.

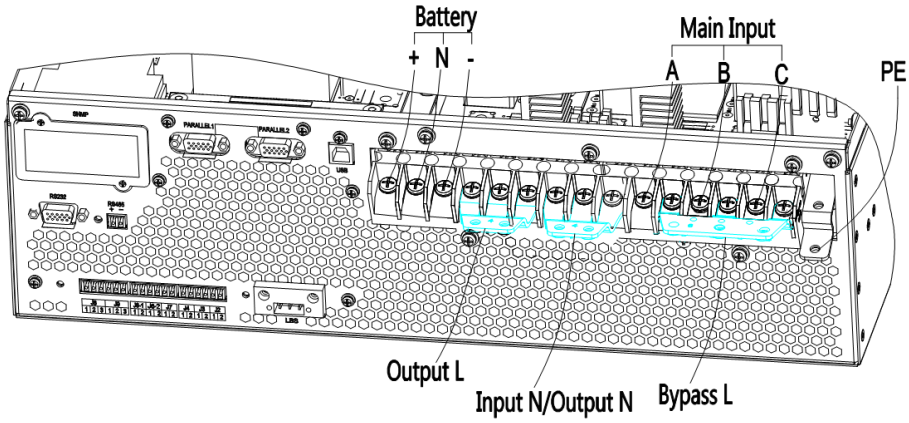

Figure 3-19 3-phase in and 1 phase out, dual input

3. Fix the insulating film (accessory) to the No.5 copper bar as shown in Figure 3-20, and fixed in the corresponding position with the plastic rivet, as shown in figure 3-21.

SEC.RU | Короткий путь к информации Скачано с sec.ru

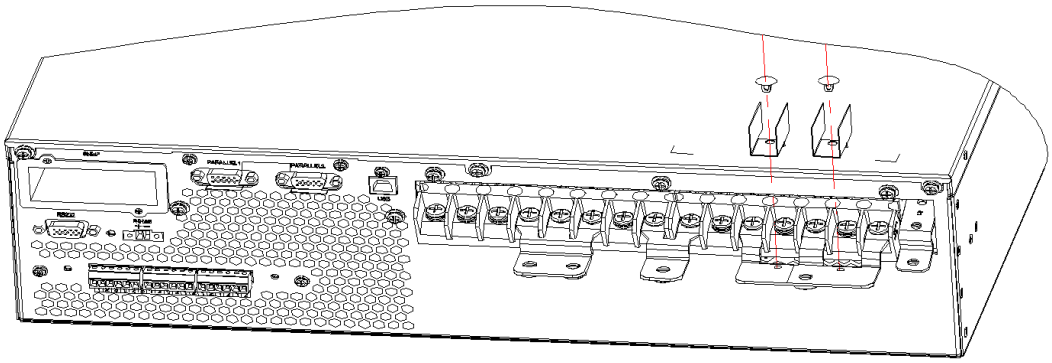

Figure 3-20 Fix insulation film

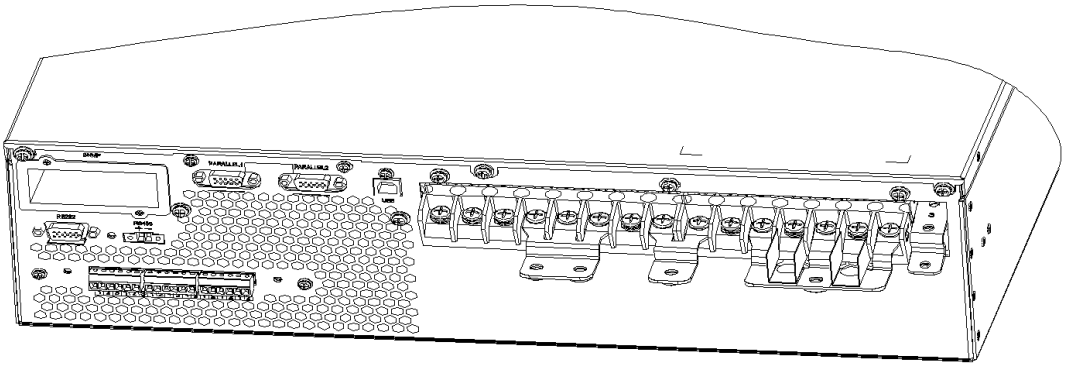

Figure 3-21 Graphic of insulation film fixed

4. Connect bypass input to No.5 copper bar, and then connect input A, B and C cables to UPS's mA, mB and mC.
5. Connect output cable to No.4 copper bar.
6. Connect bypass input N, output N, Main input N to No.7 copper bar.

SEC.RU | Короткий путь к информации Скачано с sec.ru

4 LCD Panel

This chapter introduces the functions and operator instructions of the 10-40K operator control and display panel in detail, and provides LCD display information, including LCD display types, detailed menu information, prompt window information and 25K alarm information.

4.1 Control and Operation Panel

The operation control panel of 10-40K UPS is located on the front panel of the case. By operating the LCD, the UPS can be operated, controlled, and checked for all its parameters, operating status, and alarm information. As shown in Figure 4-1

The front panel of the 25K can be divided into three parts: status indicator, LCD display, and cold-start operation key. The front panel components of the 25K are described in table 4-1.

Figure 4-1 Front panel of UPS

Table 4-1 Description of front panel parts

Item	Name	Description
①	LCD	Can operate, control, and query all its parameters, running status, and alert information to the UPS.
②	STATUS	Status indicator light; Green is normal operation; Red means fault (such as: No battery, Mains abnormal, Bypass frequency out of synchronization)
③	COLD START	Battery cold start button; press one time when UPS is off with the battery in.(Attention: Use cold start button after batter in for 1min)
④	Logo	Company trademark

4.2 LCD Screen

After the UPS starts, the screen display welcome logo and the system enters the home page. The home page is shown in Figure 4-2.

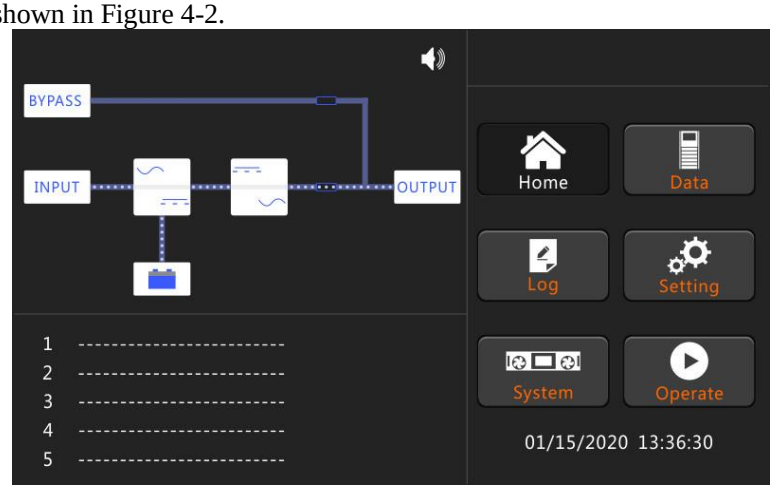

SEC.RU | Короткий путь к информации Скачано с sec.ru

Fig.4-2 Home page

Table 4-2 description of home page units

Item	Name	Description
①	MODE	Display operation mode and UPS rated capacity.
②	MENU	Enter operation interface, including data, history record, function setting, system information, control interface.
③	TIME	Display date and time.
④	RECORD	Display the warning information during operation.
⑤	INDICATOR	Indicate UPS running status and power current.
⑥	BUZZER	Buzzer control button by touch. on; off.

4.3 Menu Bar

Menu bar including“Home”, “Data”, “Log”, “Setting”, “System”, “Operate” button, press to enter.

4.3.1 Home

Touch “Home” icon and the system enters the page of the system home, as it is shown in Figure 4-3.

4.3.2 Data

Touch “Data” icon and the system enters the page of the Data including“BYPASS”, “MAIN”, “OUTPUT”, “LOAD”, “BATTERY” button, as it is shown in Figure 4-3.

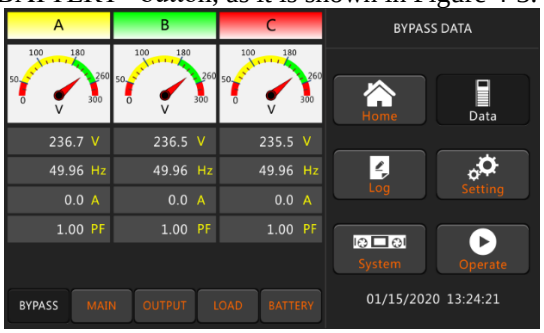

Fig.4-3 Data display page (Bypass)

Bypass page shows bypass data of every phase: voltage, frequency, current, power factor.

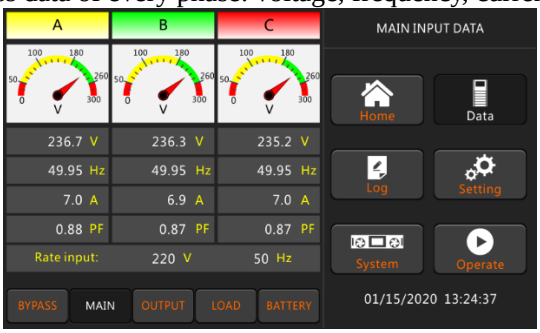

Fig.4-4 Data display page (Main)

Main page shows input data of every phase: voltage, frequency, current, power factor.

SEC.RU | Короткий путь к информации Скачано с sec.ru

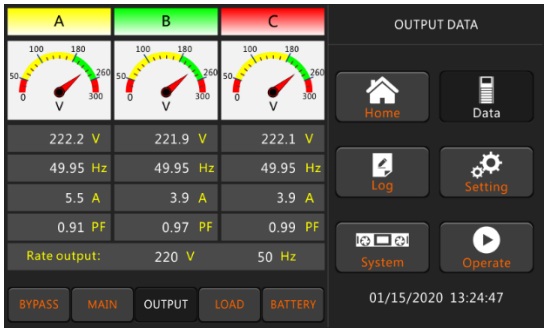

Fig.4-5 Data display page (Output)

Output page shows output data of every phase: voltage, frequency, current, power factor, rated voltage and frequency.

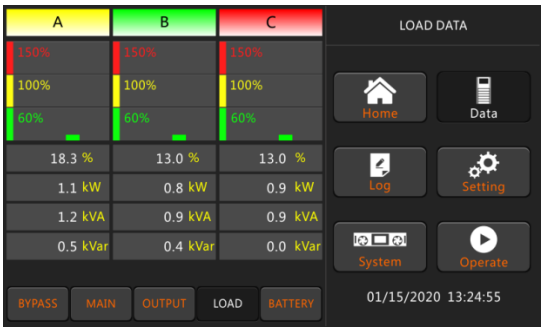

Figure4-6 Data display page (load data)

Load page shows load data of every phase: load percentage, frequency, active power, reactive power.

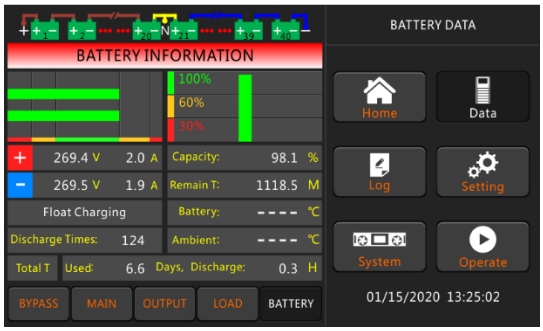

Figure4-7 Data display page (battery data)

Battery page shows battery critical data: voltage, current, capacity, etc.

4.3.3 Log

Touch the “Log” icon, and the system enters the interface of the Log, as it is shown in Figure 4-8. The log is listed in reverse chronological order, which displays the events, warnings and faults information and the data and time they occur and disappear.

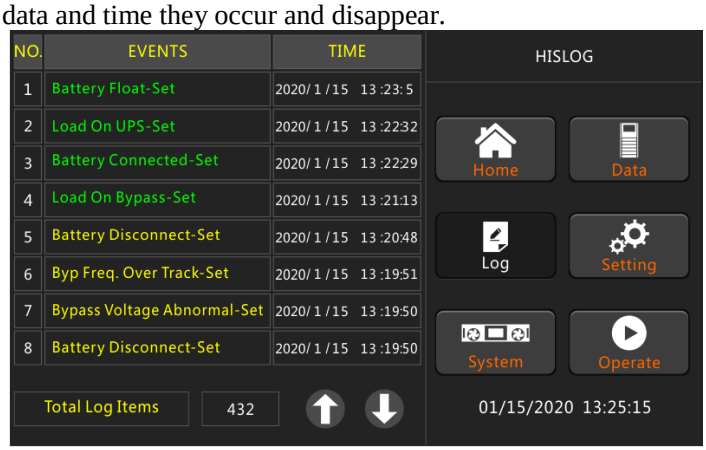

SEC.RU | Короткий путь к информации Скачано с sec.ru

Figure.4-8 Log Page

Table4-3 Events of UPS History Log

Alarm	Explanation
Load On UPS-Set	Load On UPS
Load On Bypass-Set	Load On Bypass
No Load-Set	No Load (Output Power Lost)
Battery Boost-Set	Charger is Boosting Battery Voltage
Battery Float-Set	Charger is Floating Battery Voltage
Battery Discharge-Set	Battery is Discharging
Battery Connected-Set	Battery cables Connected
Battery Not Connected-Set	Battery cables Disconnected.
Maintenance CB Closed-Set	Maintenance CB is Closed
Maintenance CB Open-Set	Maintenance CB is Open
EPO-Set	Emergency Power Off
Generator Input-Set	Generator as the Ac Input Source
Utility Abnormal-Set	Utility (Grid) Abnormal
Bypass Sequence Error-Set	Bypass voltage Sequence is reverse
Bypass Volt Abnormal-Set	Bypass Voltage Abnormal
Bypass Module Fail-Set	Bypass Module Fail
Bypass Overload-Set	Bypass Over load
Bypass Overload Tout-Set	Bypass Over Load Timeout
Byp Freq Over Track-Set	Bypass Frequency Over Track Range
Exceed Tx Times Lmt-Set	Transfer times over 5 times (from inverter to bypass) in 1 hour exceed the limit.
Output Short Circuit-Set	Output shorted Circuit
Battery EOD-Set	Battery End Of Discharge
Battery Test-Set	Battery Test Starts
Battery Test OK-Set	Battery Test OK
Battery Test Fail-Set	Battery Test fails
Battery Maintenance-Set	Battery Maintenance Starts
Batt Maintenance	Battery maintenance succeeds

SEC.RU | Короткий путь к информации Скачано с sec.ru

Alarm	Explanation
OK-Set	
Batt Maintenance Fail-Set	Battery maintenance fails
Stop Test	Battery self-test or battery maintenance status stops
Fault Clear	Clear the reported fault
Log Clear	Delete all history
Rectifier Fail-Set	Rectifier Fails
Inverter Fail-Set	Inverter Fail
Rectifier Over Temp.-Set	Rectifier Over Temperature
Fan Fail-Set	Fan Fail
Output Overload-Set	Output Over Load
Inverter Overload Tout-Set	Inverter Over Load Timeout
Inverter Over Temp.-Set	Inverter Over Temperature
On UPS Inhibited	The inverter is not powered
Manual Transfer Byp-Set	Transfer to bypass manually
Manual Transfer Byp-Set	Cancel to bypass manually
Battery Volt Low-Set	Battery Voltage Low
Battery Reverse-Set	Battery pole (positive and negative are reverse)
Inverter Protect-Set	Inverter Protect (Inverter Voltage Abnormal or Power Back feed to DC Bus)
Input Neutral Lost-Set	Input Grid Neutral Lost
Bypass Fan Fail-Set	Bypass Module Fan Fail
Manual Shutdown-Set	Manually Shutdown
NOTE：Please contact with local agency to solve, if the alarm is caused by a trained and qualified professional set by the software，and you need to change the setting value.	

4.3.4 Setting

Touch the “Setting” icon, and the system enters the page of Setting, as it is shown in Figure 4-9.

SEC.RU | Короткий путь к информации Скачано с sec.ru

Figure.4-9 Setting page

Users can enter each of the setting “DATA&TIME”, “LANGUAGE”, “COMM.”, “USER”, “BATTERY”, “SERVICE”, “RATE”, “CONFIGURE” interfaces by touching the relevant icon. The submenus are described in details below in Table 4-4.

Table 4-4 Description of each submenu of Setting

Submenu Name	Contents	Meaning
Date & Time	Date format setting	Three formats: (a) year/month/day; (b) month/date/year; (c) date/month/year
	Time setting	Setting time
Language	Current language	Language in use
	Language selection	Simplified Chinese and English selectable (The setting taking action immediately after touching the language icon)

SEC.RU | Короткий путь к информации Скачано с sec.ru

COMM.	Device Address	Setting the communication address
	RS232 Protocol Selection	SNT Protocol, Modbus Protocol, YD/T Protocol and Dwin (For factory use)
	Baud rate	Setting the baud rate of SNT, Modbus and YD/T
	Modbus Mode	Setting mode for Modbus: ASCII and RTU selectable
USER	Output voltage Adjustment	Setting the Output Voltage
	Bypass Voltage Up Limited	Up limited working Voltage for Bypass，settable:+10%, +15%, +20%, +25%
	Bypass Voltage Down Limited	Down limited working Voltage for Bypass, settable:-10%, -15%, -20%, -30%, -40%
	Bypass Frequency Limited	Permitted working Frequency for Bypass Settable: +-1Hz, +-3Hz, +-5Hz
BATTERY	Battery Number	Setting the number of the battery (12V)
	Battery Capacity	Setting of the AH of the battery
	Float Charge Voltage/Cell	Setting the floating Voltage for battery cell (2V)
	Boost Charge Voltage/Cell	Setting the boost Voltage for battery cell (2V)
	Charge Current Percent Limit	Charge current (percentage of the rated current)
SERVICE	System Mode	Setting the system mode: Single , parallel, Single ECO, parallel ECO, LBS, parallel LBS
	Parallel number	Parallel system UPS numbers
	Parallel ID	UPS ID in parallel system
	Slew rate	Bypass frequency slew rate
	Synchronization window	Bypass frequency slew window
	System auto start mode after EOD	UPS start mode after battery end of discharging
RATE	Configure the rated Parameter	For the factory use
CONFIGURE	Display mode	Support Tower and Rack LCD display
	Back light time	LCD back light time
	Contrast	LCD contrast

4.3.5 System

Touch the “System” icon, and the system enters the page of System, as it is shown in Figure 4-10.

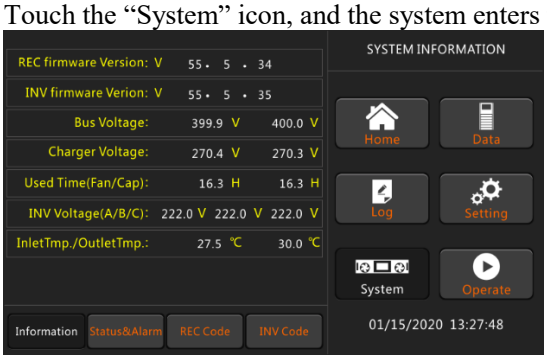

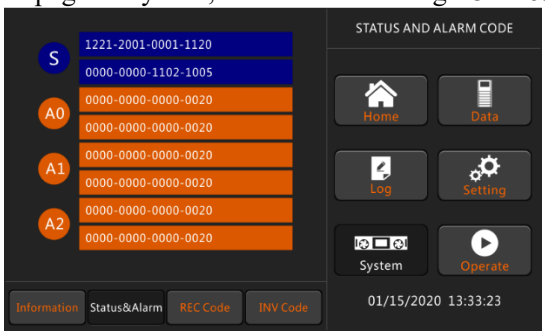

SEC.RU | Короткий путь к информации Скачано с sec.ru

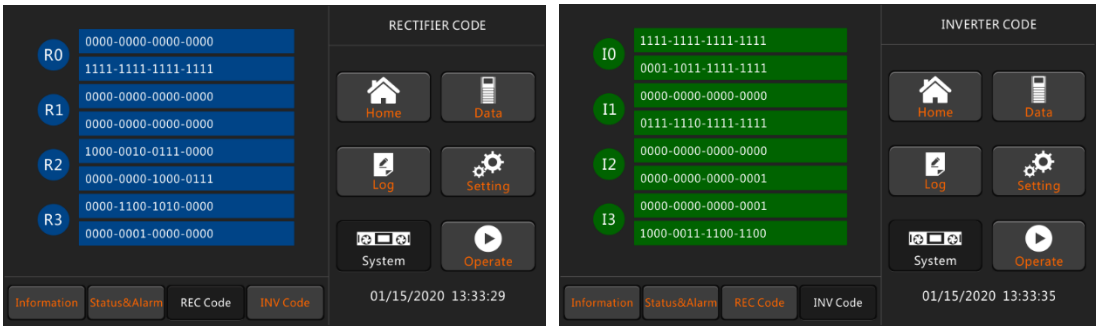

Figure.4-10 System Page

System Information Window displays rectifier and inverter software version, Bus voltage, charger voltage, fan used time, inverter voltage and inlet/outlet temperature.

4.3.6 Operate

Touch the “Operate” icon, and the system enters the page of “Operate”, as it is shown in Figure 4-11.

Figure.4-11 Operate Page

The “Operate” menu includes FUNCTION BUTTON and TEST COMMAND. The contents are described in details below.

FUNTION BUTTON

- **On/Off**

Manual turn ON/OFF UPS

- **Fault Clear**

Clear the faults by touching the icon.

- **Transfer to Bypass**

Transfer to bypass mode by touching the icon

- **Transfer to Inverter**

Transfer the bypass mode to Inverter Mode by touching the icon.

- **Reset Battery History Data**

Reset the battery history data by touching the icon, the history data includes the times of discharge, days for running and hours of discharging.

TEST COMMAND

- **Battery Test**

By touching the icon， the system transfer to the Battery mode to test the condition of the battery. Ensure the bypass is working normally and the capacity of the battery is no less than 25%.

- **Battery Maintenance**

By touching the icon, the system transfers to the Battery mode. This function is used for maintaining the battery, which requires the normality of the bypass and minimum capacity of 25% for the battery.

- **Battery Boost**

By touching the icon, the system starts boost charging.

- **Battery Float**

By touching the icon, the system starts float charging.

SEC.RU | Короткий путь к информации Скачано с sec.ru

- **Stop Test**

By touching the icon, the system stops battery test or battery maintenance.

4.4 Sound Alarm（Buzzer）

UPS may have these two different kind sounds as shown in below table 4-5 to alarm with operation.

Table4-5 Sound Alarm Description

Buzzer	Meaning
Two short, one long	UPS has alarm (such as Mains Abnormal)
Keep buzzer	UPS has faults (such as fuse blown or other hardware failure)

SEC.RU | Короткий путь к информации Скачано с sec.ru

5 Operation

5.1 UPS Start-up

5.1.1 Startup in normal mode

The UPS must be started up by commissioning engineer after the completeness of installation. The steps below must be followed:

1. Ensure all the circuit breakers are open.
2. One by one to close the output breaker, input breaker, bypass input breaker, and then the system starts initializing;
3. The LCD in front of the cabinet is lit up. The system enters the home page, as shown in Figure 5-2.
4. Notice the energy flowing diagram，the rectifier start and indicator flashes. As shown in Figure 5-1.

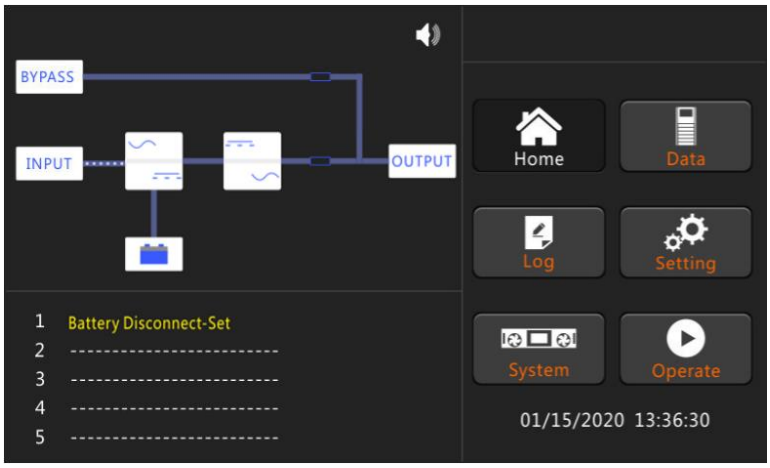

Figure.5.1 Rectifier starting

1. After about 30S, the rectifier start is completed, the bypass static switch is on, and the bypass indicator flashes. As shown in Figure 5-2.

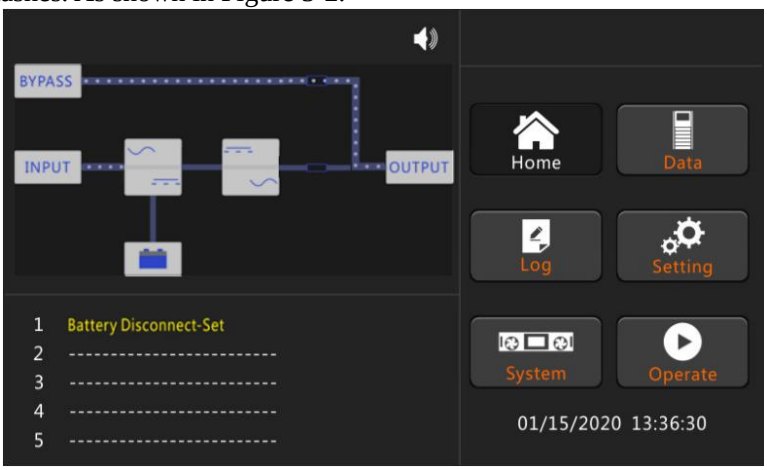

Figure.5.2 Bypass starting

2. After the bypass static switch is on, the inverter starts and the inverter indicator bar flashes as shown in Figure 5-3.

SEC.RU | Короткий путь к информации Скачано с sec.ru

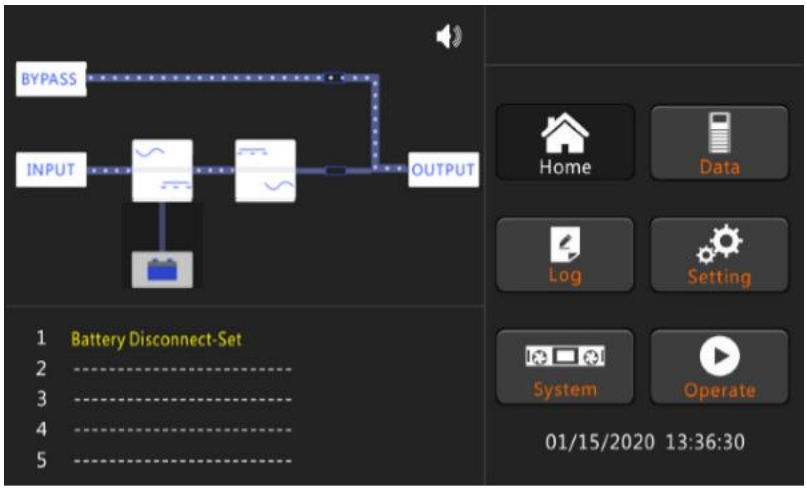

Figure.5.3 Inverter starting

3. After about 30S, when the inverter is running normally, the UPS switches from the bypass to the inverter, the bypass indicator bar is off, and the load indicator bar flashes. As shown in Figure 5-4.

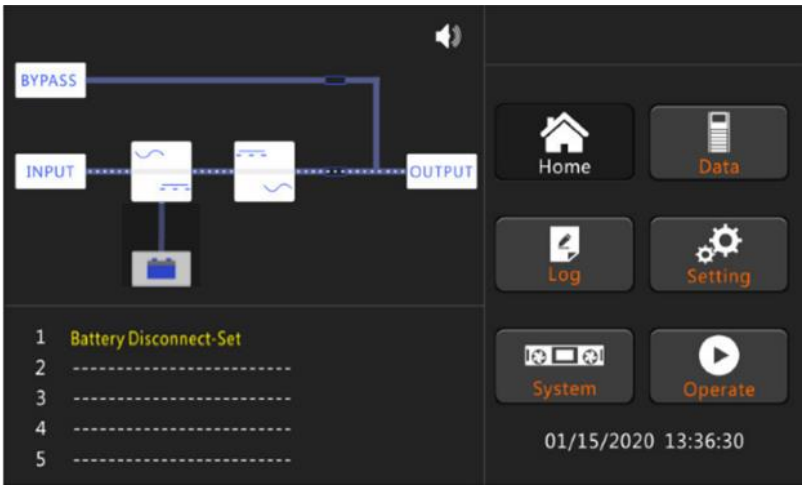

Figure.5.4 Normal mode

4. Users can close the external or internal battery breaker, the load indicator bar flashes. Then start charge the battery. The startup has finished. As shown in Figure 5-5.

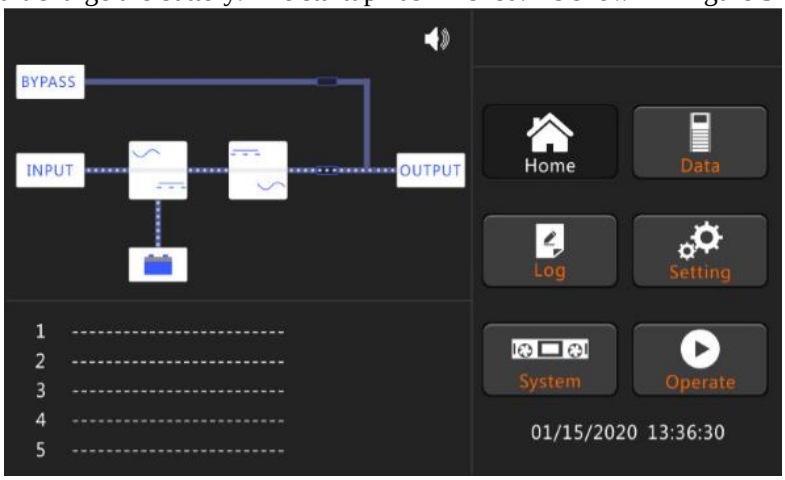

Figure.5.5 Charger start working

Note

- *You can set the parameters of language, date and time through submenu. When the system starts, the stored setting will be defaulted. If you have already set these parameters, system default existing settings。*

SEC.RU | Короткий путь к информации Скачано с sec.ru

- *Users can browse all events during the process of the starting up by checking the menu Log.*

5.1.2 Start from battery

The start from battery refers to the battery cold start. The steps of the start-up are as follow:

1. Confirm the batteries are correctly connected, and then close the external battery circuit breakers.
2. Press and hold the red button of battery, as shown in Figure 5-6, battery supply power to UPS.

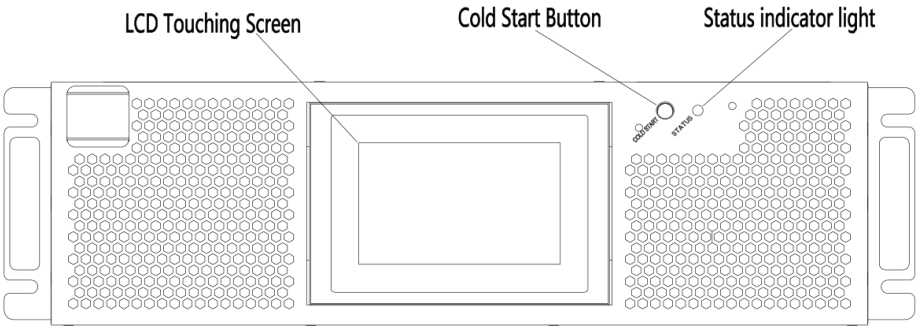

Figure5-6 Position of the battery cold start button

3. Then UPS starts up after step 3 normal mode, the rectifier completes the start, and the inverter begins to start, and after 60 seconds, the inverter complete the start, UPS run in battery mode, as shown in figure5-7.

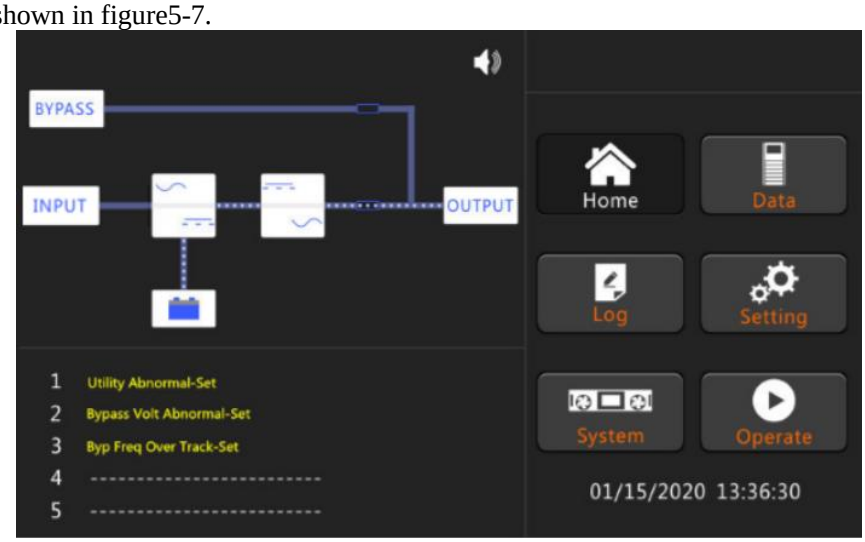

Figure5.7 Energy flowing diagram of the start completed from batteries

4. Close the external output power supply isolators to supply the loads, and the system is working in battery mode.

Attention: Press battery cold start button after 1 minute of battery access.

5.2 Procedure for Switching between Operation Modes

5.2.1 Switching the UPS from normal mode into battery mode

Disconnect the input switch to cut off the mains, the UPS transfers to battery mode. If you need to switch back to normal mode, supply the mains after waiting few seconds. After 10 seconds, rectifiers restart automatically and restore power to the inverter.

5.2.2 Switching the UPS from normal mode into bypass mode

Touching the icon

under the submenu (setting) on the LCD control board.

SEC.RU | Короткий путь к информации Скачано с sec.ru

Warning

Ensure the bypass is working normally before transferring to bypass mode. Or it may cause failure.

5.2.3 Switching the UPS into normal mode from bypass mode

Touch the icon

under the submenu (setting) on the LCD control board. UPS will return to Normal Mode from bypass mode.

5.2.4 Switching the UPS into maintenance bypass mode from normal mode

These following procedures can transfer the load from the UPS inverter output to the maintenance bypass supply, which is used for maintaining the UPS.

1. Touching the icon “manual bypass” Transfer the UPS into Bypass mode as per the chapter 5.2.2. The load is switched to static bypass and the inverter is turned off.
2. Disconnect the battery breaker, connect the maintenance bypass breaker. And the load is powered through maintenance bypass and static bypass.
3. Disconnect the main, bypass, output breaker，The load is powered through maintenance bypass.

Warning

Before making this operation, confirm the messages on LCD display to ensure that bypass supply is regular and the inverter is synchronous with it, so as not to risk a short interruption in powering the load.

Danger

Even with the LCD turned off, the terminals of input and output may be still energized.
Wait for 10 minutes to let the DC bus capacitor fully discharge before removing the cover.

5.2.5 Switching the UPS into normal mode from maintenance bypass mode

These following procedures can transfer the load from the Maintenance Bypass mode to inverter output.

1. After finish of maintenance. One by one to turn on the output breaker, the bypass input breaker, the input breaker and the external battery breaker. After 30S, the bypass indicator LED flashes and the load is powered through maintenance bypass breaker and static bypass.
2. Turn off the maintenance bypass breaker and fix the protection cover, and then the load is powered through static bypass. The rectifier starts after 30 seconds, inverter is starting. The inverter energy bar flashes and the inverter starts。
3. After 60 seconds, the system transfers to normal mode.

5.3 Battery Maintenance

If batteries not discharged for a long time, it is necessary to test the condition of batteries.
By selecting the submenu, as shown in Figure 5-8 below, touch the battery maintenance icon and the system enters battery mode to discharge until the battery voltage is low. During the maintenance test, you can choose to terminate the test and stop the battery discharge.
If you select the battery self-test function, the battery is discharged for a short period of approximately 30 seconds and then automatically cut back. This function primarily verifies that the battery pack is faulty.

SEC.RU | Короткий путь к информации Скачано с sec.ru

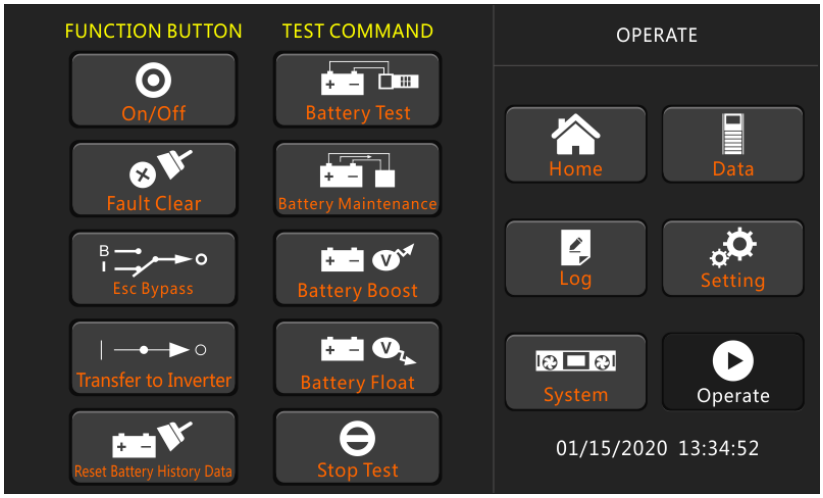

Figure5-8 Battery maintenance

5.4 Parallel UPS

5.4.1 Diagram of the parallel system

UPS can be scaled up to four times the stand-alone capacity by parallel 4 cabinets，The parallel structure diagram is shown in Figure 5-9.

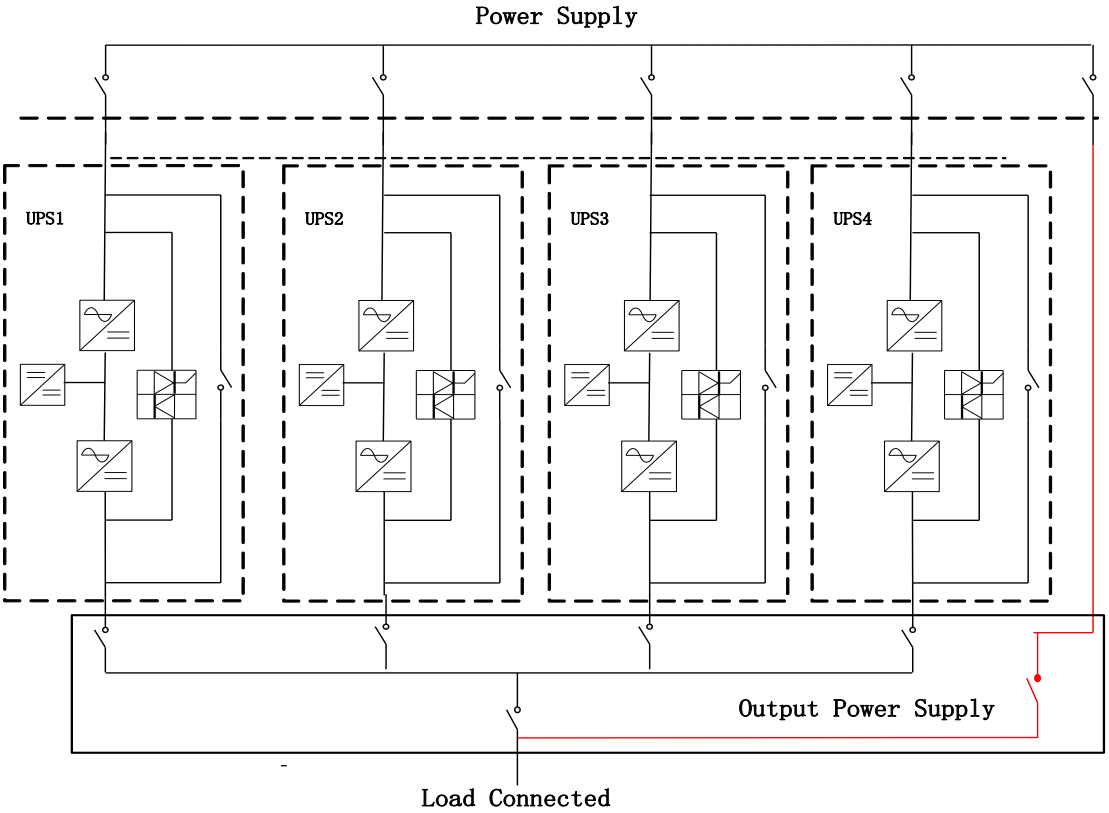

Figure5-9 Parallel Structure

The system parallel board is PS1409_TF1, located on the rear of the UPS cabinet, its position is shown in Figure 5-10.

SEC.RU | Короткий путь к информации Скачано с sec.ru

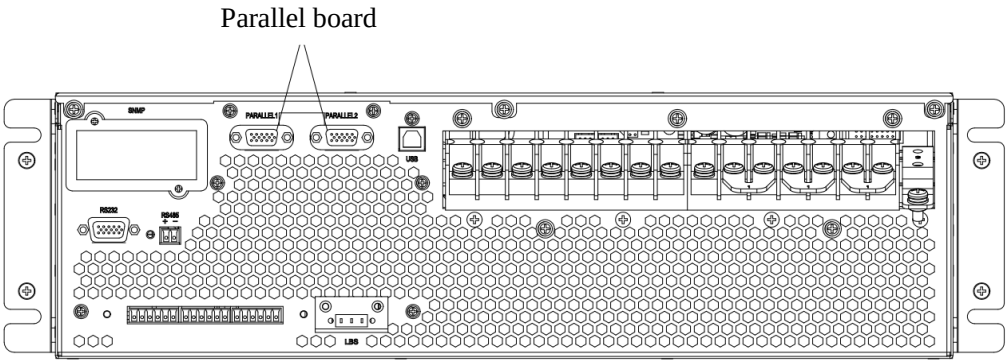

Figure5-10 Parallel board location

Open the cover of parallel board, connect the terminals in order with cables, connected into a ring. The connection is shown in Figure 5-11.

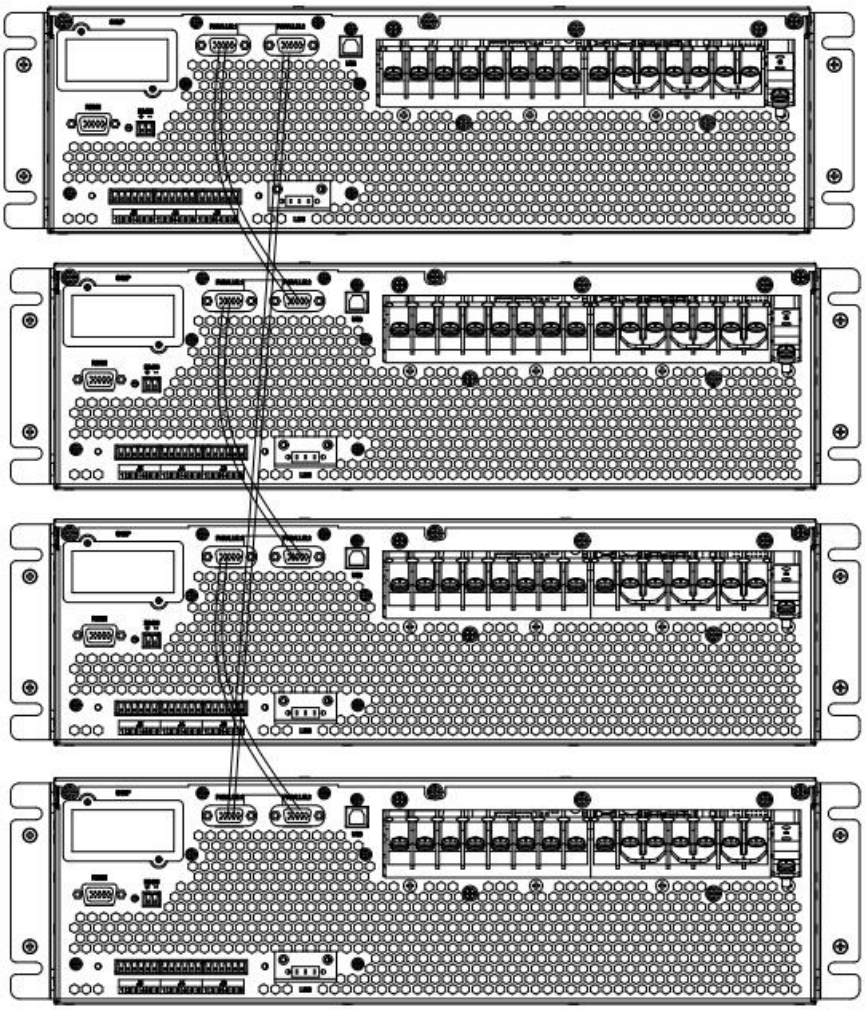

Figure5-11 Parallel connection

5.4.2 Parallel operation process

Short-circuit the main and bypass inputs of each UPS in the system (If the main side of different sources, then short circuit the main road, bypass and other UPS in the system of the main road, bypass together). Taking into account the bypass current sharing problem of the parallel system, the specifications and length of the input and output power lines of each UPS in the parallel system should be consistent.

If the customer needs to set the parallel parameters according to actual needs, please follow the steps below:

1、Set each UPS in the machine system one by one: IN our company's back-office management

SEC.RU | Короткий путь к информации Скачано с sec.ru

software "User Settings" "System Settings", set to "Parallel" and select "Number of Parallel" and "System ID", in principle, the system ID starts from "0" and is continuous and must not be repeated. For example: a three-parallel system, the ID of one machine is set to "0", and the other two are set to "1" and "2" in turn. The machine and the code correspond freely, and no special requirement. Follow the example in the figure to set the “Frequency Tracking Speed” and “Frequency Tracking Limits”. All UPS output parameters must be consistent, otherwise they can’t be paralleled.

All settings take effect after the UPS restarts. Background parallel parameter settings are shown in Figure.5-12.

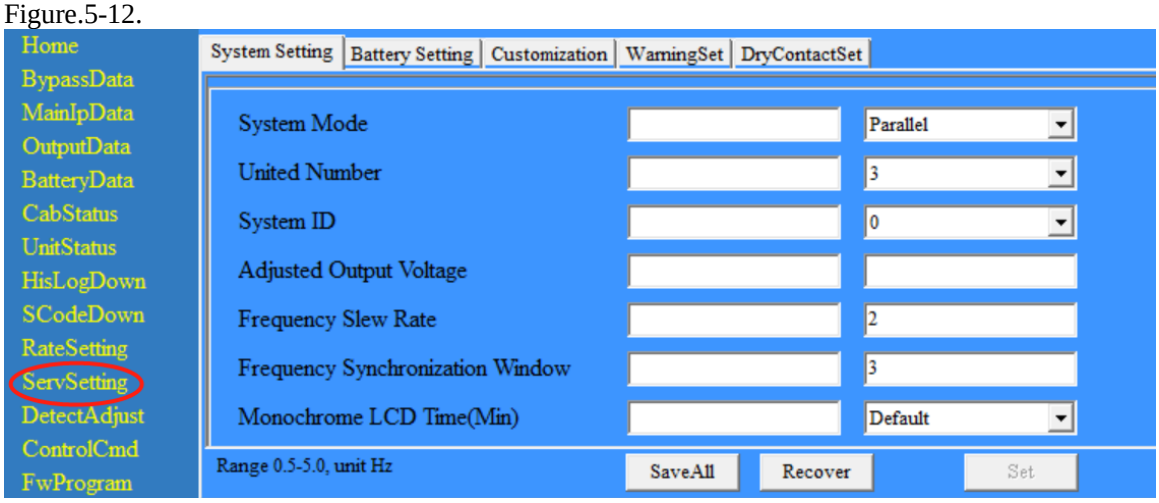

Figure5-12 Background parallel setting

2、Depending on the number of parallel machines, and the corresponding short pin status on the board is different, as shown in Figure 5-13

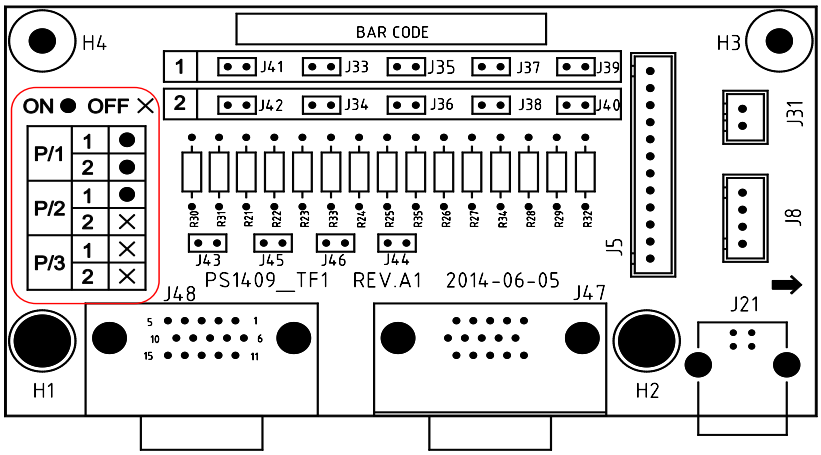

Figure5-13 Parallel board (PS1409_TF1)

3、Parallel pin skipping instruction

A、Single UPS: No parallel board is required, and if so, the J33-J42 needs to be shorted through a short circuit block

B、Two UPS parallel: J33/J35/J37/J39/J41 needs to be short through short circuit blocks, J34/J36/J38/J39/J42 hang in the air.

C、Three or four UPS parallel: J33-J42 is floating.

4、Control board pin skipping instruction

Single UPS: The right side of the control board (20K、25K control board PS1608_CT2 -J15、J18、J19、J20、J21) (10K、15K control board PS1203_CT1 -J21,J22,J23,J24,J25) short by short-circuit block.

Parallel: all floating, there is no operation need for 40K control board, as shown in figure 5-14.

SEC.RU | Короткий путь к информации Скачано с sec.ru

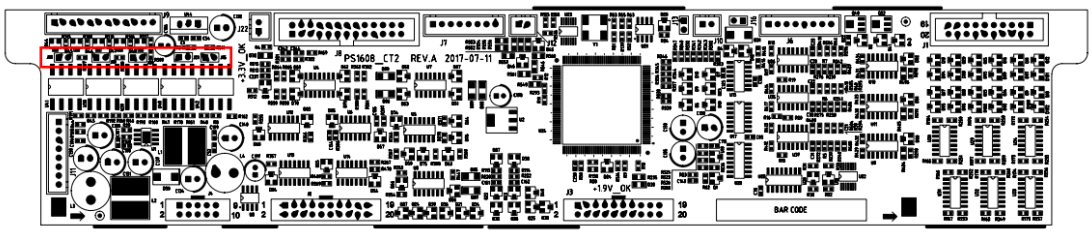

20K, 25K Parallel pin skipper in controlled board (PS1608_CT2)

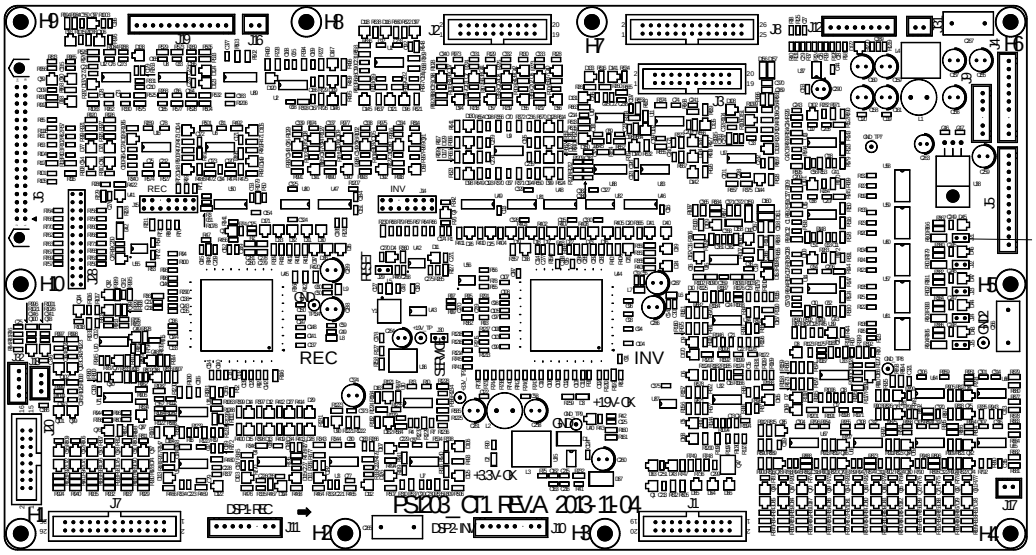

10K, 15K Parallel pin skipper in controlled board (PS1203_CT1)

Figure5-14

◆***Note: Pin skippers his article is not covered are operating nothing.***

After confirming that each single UPS is properly commissioned, debug the parallel system，the specific steps are as follows:

1） Close the input and output breakers of one of the UPSs, and the UPS will power on and enter the bypass for power supply, The rectifier and inverter are turned on one after another and switched to the inverter power supply mode, test whether the output is normal;

2） Close the input and output breaker of the second UPS, follow the above start-up operation steps, and the UPS will automatically enter the system, Check the LCD display UPS without warning and make sure that the UPS is working normally;

3） And so on, continue to put the third or fourth UPS into the parallel system after turning on the inverter;

4） With a certain load, each UPS should be able to share the load equally.

Warning

During the power-on process of the parallel system, make sure that the external output of each UPS is closed, and that all UPS inverter outputs are parallel.

SEC.RU | Короткий путь к информации Скачано с sec.ru

6. Maintenance

This chapter introduces UPS maintenance, including the maintenance instructions of power module, monitoring and bypass module.

6.1 Precautions

1. Only maintaining engineers can maintain the power module.
2. The power module should be disassembled from top to bottom, so as to prevent any inclination from high gravity center of the cabinet.
3. To ensure the safety before maintaining power module and bypass module, use a multi-meter to measure the voltage between operating parts and the earth to ensure the voltage is lower than hazardous voltage, i.e. DC voltage is lower than 60Vdc, and AC maximum voltage is lower than 42.4 Vac, the voltage on the DC bus capacitor is less than 60Vdc
4. Wait 10 minutes before opening the cover of the power module or the bypass after pulling out from the cabinet.

6.2 Instruction for maintaining UPS

Please refer to Chapter 4.3.4 to transfer to maintenance bypass mode， remove the UPS door panel and the damaged parts. After the maintenance is complete, the components and the door panels are returned to the cabinet. Refer to chapter 5.2.5 to transfer UPS to normal module from maintenance bypass mode.

6.3 Instruction for Maintaining Battery String

For the Lead-Acid maintenance free battery, when maintaining the battery according to requirements, battery life can be prolonged. The battery life is mainly determined by the following factors: installation, temperature, charging/discharging current, charging voltage, discharge depth, long-time discharge.
1) Installation. The battery should be placed in dry and cool place with good ventilation. Avoid direct sunlight and keep away from heat source. When installing, ensure the correct connection to the batteries with same specification.
2) Temperature. The most suitable storage temperature is about 25℃.
3) Charging/discharging current. The best charging current for the lead-acid battery is 0.1C. The maximum charging current for the battery can be 0.2C. The discharging current should be 0.05C-3C.
4) Charging voltage. In most of the time, the battery is in standby state. When the utility is normal, the system will charge the battery in boost mode (constant voltage with maximum limited) to full and then transfers to the state of float charge to prolong the battery life. Discharge only without power. Float charging voltage of each cell is about 13.7V. If the charging voltage is too high, the battery will be overcharged, if the charging voltage is too low, the battery will be lack of power.
5) Discharge depth. Avoiding deep discharge, which will greatly reduce the life time of the battery. When the UPS runs in battery mode with light load or no load for a long time, it will cause the battery to deep discharge.
6) Check periodically. The battery should be checked regularly after a certain amount of time Observe if any abnormality of the battery, measure if the voltage of each battery is in balance. Discharge the battery periodically.The battery remain charged for a long time, which will make the battery less active, so even without power outages, UPS will need to conduct regular discharge tests to keep the battery active.

Warning
Daily inspection is very important!
Check and confirm the battery connection is tightened regularly, and make sure there is no abnormal heat generated from the battery.

SEC.RU | Короткий путь к информации Скачано с sec.ru

Warning

If one battery has leakage or is damaged, it must be replaced, stored in a container resistant to sulfuric acid and disposed of in accordance with local regulations.

The waste lead-acid battery is a kind of hazardous waste and is one of the major contaminants controlled by government.
Therefore, its storage, transportation, use and disposal must comply with the national or local regulations and laws about the disposal of hazardous waste and waste batteries or other standards. According to the national laws, the waste lead-acid battery should be recycled and reused, and it is prohibited to dispose of the batteries in other ways except recycling. Throwing away the waste lead-acid batteries at will or other improper disposal methods will cause severe environment pollution, and the person who does this will bear the corresponding legal responsibilities.

6.4 Maintenance of fan and dust filter

The fan and dust filter of 30/40K support direct front replacement maintenance, the replacement procedure is shown in the figure below：

Replace the fan procedure

1. Take out the decorative strips on both sides.

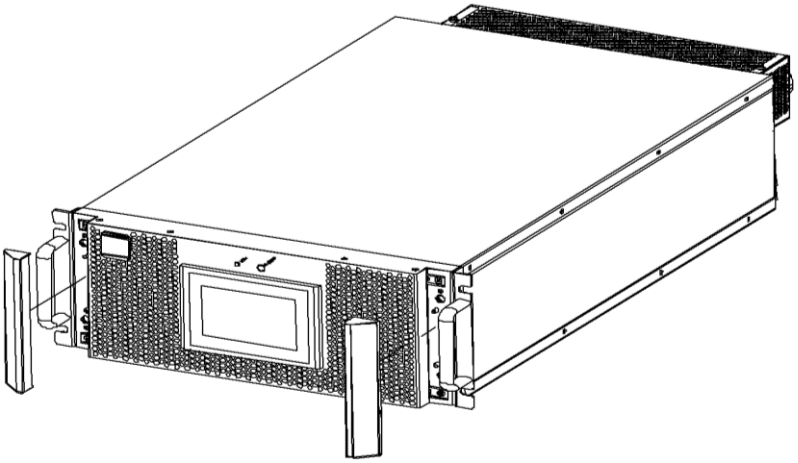

2. Remove the screws from the front panel hole.

SEC.RU | Короткий путь к информации Скачано с sec.ru

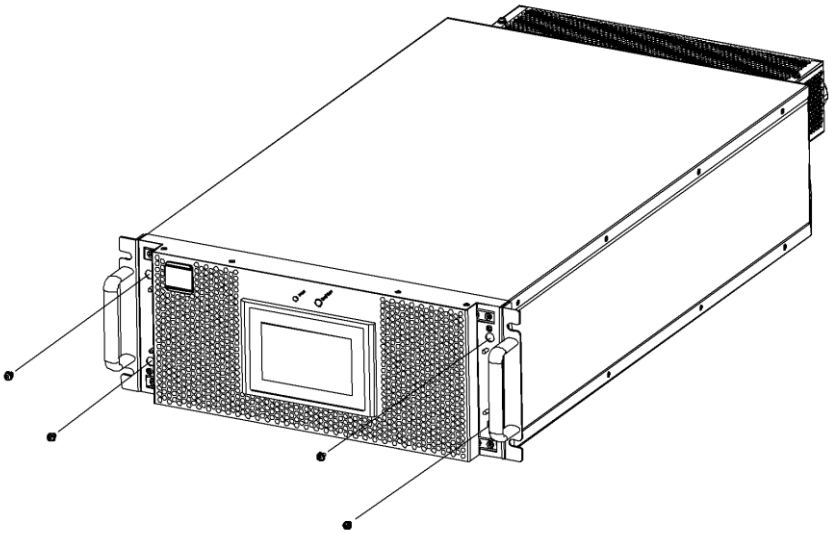

3. Unplug the front panel and remove the line connected with the fan power board.

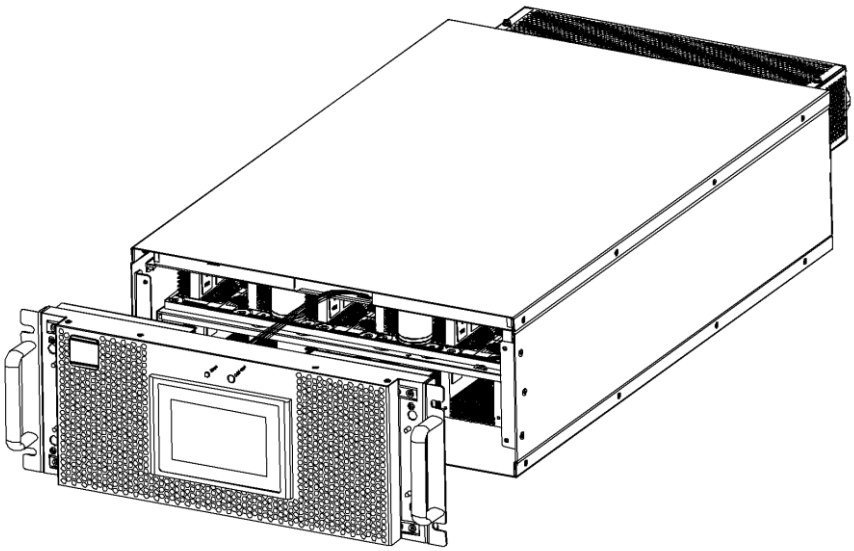

4. Remove the fan screw to replace the fan. Replace the fan and install the front panel in accordance with the above procedure.

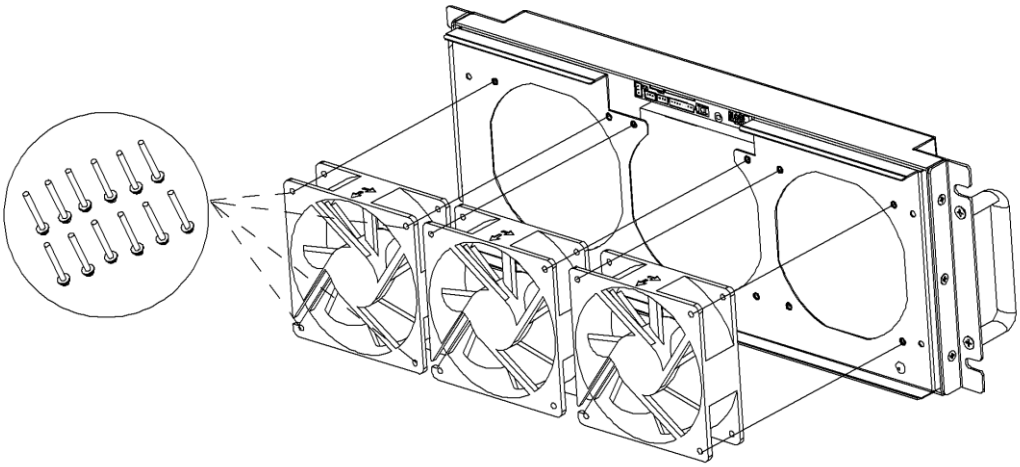

SEC.RU | Короткий путь к информации Скачано с sec.ru

Dust filter replacement procedure

1. Remove the front panel and then remove the screws from the front panel.

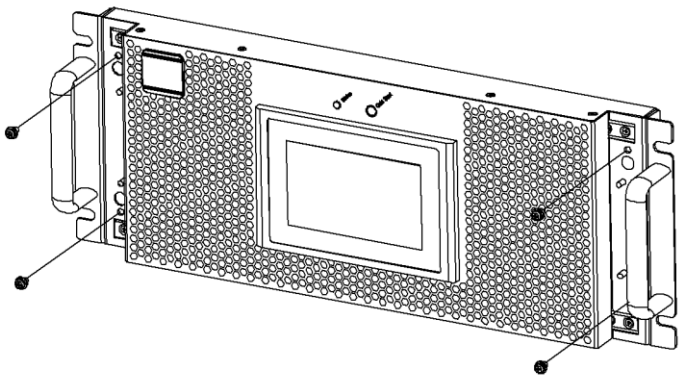

2. Remove the fan fixing structure

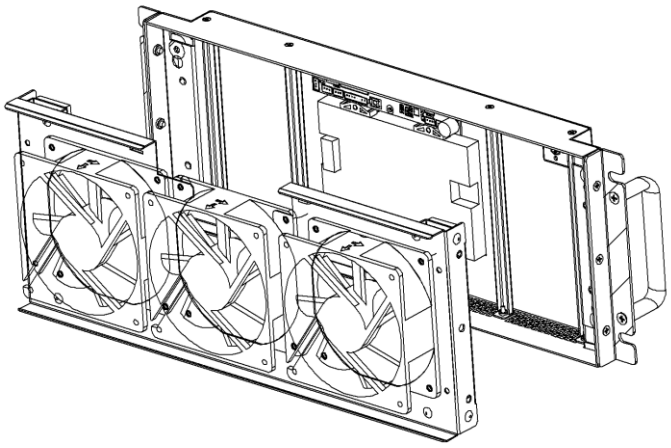

3. Remove the screws of the dust filter fixing strip and remove the dust filter holder to replace the dust filter.

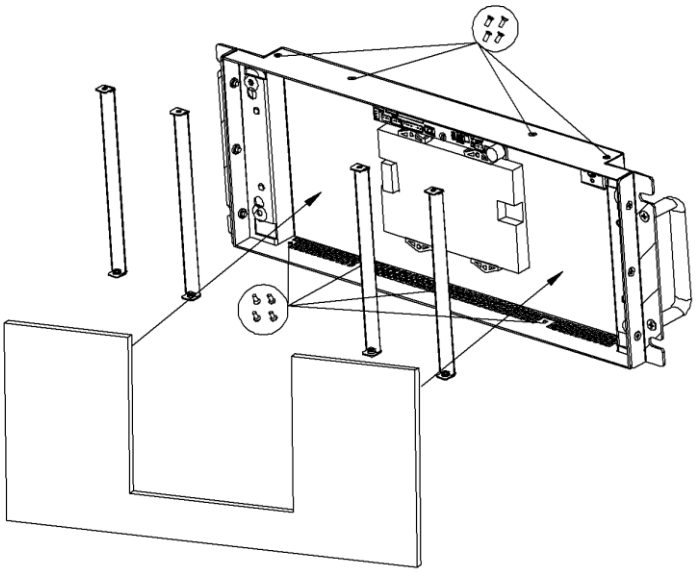

SEC.RU | Короткий путь к информации Скачано с sec.ru

7. Product Specifications

This chapter provides the specifications of the product, including environment characteristics mechanical characteristics and electrical characteristics.

7.1 Applicable Standards

The UPS has been designed to conform to the following European and international standards:

Table7.1 Compliance with European and International Standards

Item	Normative reference
General safety requirements for UPS used in operator access areas	EN50091-1-1/IEC62040-1-1/AS 62040-1-1
Electromagnetic compatibility (EMC) requirements for UPS	EN50091-2/IEC62040-2/AS 62040-2 (C3)
Method of specifying the performance and test requirements of UPS	EN50091-3/IEC62040-3/AS 62040-3 (VFI SS 111)

Attention：The above mentioned product standards incorporate relevant compliance clauses with generic IEC and EN standards for safety (IEC/EN/AS60950), electromagnetic emission and immunity (IEC/EN61000 series) and construction (IEC/EN60146 series and 60950).

7.2 Environmental Characteristics

Table7.2 Environmental Characteristics

Item	Unit	Parameter
Acoustic noise level at 1 meter	dB	65dB @ 100% load, 62dB @ 45% load
Altitude of Operation	m	≤1000, load de-rated 1% per 100m from 1000m to 2000m
Relative Humidity	%RH	0-95, non-condensing
Operating Temperature	℃	0-40 (for UPS only), Battery life is halved for every 10 ℃ increase above 20 ℃
UPS Storage Temperature	℃	-40-70

7.3 Mechanical Characteristics

The main mechanical characteristics of the cabinet are shown below for table 7.3.

Table7.3 mechanical characteristics of the cabinet

Cabinet model	Unit	10K	15K	20K	25K	30K	40K
Dimension (W×D×H)	mm	438*780*130 (3U)				438*700*174 (4U)	
Weight	kg	25	25	30	30	41	41
Color	N/A	Black					
Protection Level	N/A	IP20					

SEC.RU | Короткий путь к информации Скачано с sec.ru

7.4 Electrical Characteristics

7.4.1 Electrical Characteristics (Input Rectifier)

The main electrical characteristics of the rectifier are shown in Table 7.4 below.

Table7.4 Rectifier AC input Mains

Item	Unit	Parameter	
Grid System	\	3 Lines + Neutral + Ground	
Rated AC Input Voltage	Vac	380/400/415 (three-phase and sharing neutral with the bypass input)	
Rated Frequency	Vac	50/60Hz	
Input voltage range	Vac	304V~478VVac (Line-Line),full load 228V~304Vac (Line-Line), load decrease linearly from 100% to 75%	
Input Frequency range	Hz	40~70	
Input Power factor	kW/kVA，full load	>0.99	
THDI	THDI%	<4%, 100% Resistance load	<3%, 100% Resistance load

7.4.2 Electrical Characteristics (Intermediate DC Link)

Table7.5 Battery parameter

Items	Unit	Parameters
Battery bus voltage	Vdc	Rated: ±240V
Quantity of lead-acid cells	Nominal	40=[1 battery(12V)] , 240=[1 battery(2V)]
Float charge voltage	V/cell (VRLA)	2.25V/cell (selectable from 2.2V/cell~2.35V/cell) Constant current and constant voltage charge mode
Temperature compensation	mV/°C/cl	－3.0(selectable: 0~-5.0)
Ripple voltage	% V float	≤1
Ripple current	% C_{10}	≤5
Boost Voltage	VRLA	2.4V/cell (selectable from: 2.30V/cell~2.45V/cell) Constant current and constant voltage charge mode
End Of Discharge Voltage	V/cell (VRLA)	1.65V/cell (selectable from: 1.60V/cell~1.750V/cell) @0.6C discharge current 1.75V/cell (selectable from: 1.65V/cell~1.8V/cell) @0.15C discharge current (EOD voltage changes linearly within the set range according to discharge current)
Battery Charge	V/cell	2.4V/cell(selectable from: 2.3V/cell~2.45V/cell) Constant current and constant voltage charging mode
Battery Charging Power Max Current	kW	10%* UPS capacity (selectable from: 1~20%* UPS capacity)

Note: The default battery number is 40. When the actual battery in use is 32-44, ensure the actual number and the set number is the same, otherwise, batteries may be damaged. To set the number of battery packs, please contact the manufacturer's customer service phone.

7.4.3 Electrical Characteristics (Inverter Output)

SEC.RU | Короткий путь к информации Скачано с sec.ru

Table7.6 Inverter Output (To critical load)

Items	Unit	Parameters
Rated AC voltage	Vac	380/400/415 (Three-phase four-line, with the bypass common middle line)
Rated Frequency	Hz	50/60
Frequency Regulation	Hz	50/60Hz±0.1%
Voltage precision	%	±1.5 (0-100% Linear load)
Overload	%	110%, 60min; 125%, 10min; 150%, 1min; >150%, 200ms
Synchronized Range	Hz	Settable, ±0.5Hz ~ ±5Hz, default ±3Hz
Synchronized Slew Rate	Hz	Settable, 0.5Hz/S ~ 3Hz/S, default 0.5Hz/S
Output Power Factor		1
Transient Response		<5% (20% - 80% -20% step load)
Transient recovery		< 30ms (0% - 100% -0% step load)
Output Voltage THDu		<1%, 0-100%, linear load <6%, non-linear load
Output short circuit current(Irms)	A	2.5 times rated current
Output short circuit(Ipeak)	A	3 times rated current

7.4.4 Electrical Characteristics (Bypass Mains Input)

Table 7-7 Bypass Mains Input

Item	Unit	Value		
Rated AC voltage	Vac	380/400/415 (three-phase four-wire and sharing neutral with the bypass)		
Rated current	A	23	38	61
Overload	%	125% Long term operation; 125%~130% for 10min; 130%~150% for 1min; 150%~400% for 1s; >400% , less than 200ms		
Current rating of neutral cable	A	1.7×In		
Frequency	Hz	50/60		
Switch time (between bypass and inverter)	ms	Synchronized transfer: 0ms		

SEC.RU | Короткий путь к информации Скачано с sec.ru

Bypass voltage range	%	Settable: Upper limit: ＋10, ＋15, ＋20, default＋15 Lower limit: －10, －15, －30, －40, default－20
Bypass frequency range	%	Settable, ±1Hz, ±3Hz, ±5Hz
Synchronized Range	Hz	Default: ±2Hz (Settable: ±0.5Hz～±5Hz）

7.5 Efficiency

Table7.8 Efficiency

Items	Unit	Parameters		
Normal mode(dual conversion)	%	>95	>95.5	>96
ECO mode	%	>98	>98	>98.5
Battery mode	%	>94.5	>95	>95.5

7.6 Display and Interface

The system display and interface are shown in the following table 7.9

Table7.9 System display and interface

Display	LCD
Interface	Standard: RS232 (standard for 10-25K), RS485, Dry Contact Option: SNMP, Parallel, USB (standard for 30-40K)

SEC.RU | Короткий путь к информации Скачано с sec.ru