BOLID SECURITY SYSTEMS

Orion ISS

Addressable Polling Loop Controller

S2000-KDL

User's Manual

SEC.RU | Короткий путь к информации
Скачано с sec.ru

This User's Manual is intended to help for studying operability principles and maintenance of the **S2000-KDL Addressable Polling Loop Controller** of version **1.46**.

Please read the instructions completely before connecting, operating, adjusting, or maintaining this product.

The following terms are used throughout the Manual:

Addressable Device: The device which supports a special protocol of communicating data with the S2000-KDL. Each addressable device must be assigned to a unique number of 1 to 127 which is programmed either by DIP switches on its PCB or stored in the device non-volatile memory. An addressable device can be a fire or intrusion detector or call point, or input module, or temperature & humidity sensor S2000-VT, or utility meter S2000-ASR2, or expansion module LEM-Ex rev.2, or executive module S2000-SP2, etc.

Polling Loop: The two-wire multiplex addressable loop of the S2000-KDL through which the controller communicates data with and supplies power to connected addressable devices

Loop Address: A unique number of the addressable device within the polling loop of the S2000-KDL

Addressable Zone: The minimal independently monitored / controlled point in the polling loop of the S2000-KDL (similar to an alarm loop for a non-addressable installation). An S2000-KDL supports up to 127 addressable zones. Each addressable zone of the S2000-KDL can be configured either as an input or as an output. An input zone is the one through which the controller monitors the connected initiating devices and analyses received data generating relevant statuses and activating executive modules, if programmed. An output zone is the one to which the controller sends executive commands for the connected executive module, if programmed

Arming / Disarming: Starting / cancellation generating alarms for an input addressable zone

Network Address: A unique number of the controller (1 to 127) within the local RS-485 network of the Orion integrated security system

SEC.RU | Короткий путь к информации Скачано с sec.ru

Table of Contents

General **5**
Specifications **11**
Operation Principles **15**
Multiplex Addressable Polling Loop of the S2000-KDL *16*
Input Zones of the Polling Loop *18*
Zone's Configuration Parameters 19
Zone Type 1: Smoke Fire 23
Zone Type 2: Combined Fire 23
Zone Type 3: Heat Fire 24
Zone Type 4: Intrusion 25
Zone Type 5: Intrusion with Tamper Monitoring 26
Zone Type 6: Auxiliary 27
Zone Type 7: Entrance 28
Zone Type 8: Smoke Analogue With Programmable Thresholds 29
Zone Type 9: Heat Analogue With Programmable Thresholds 30
Zone Type 10: Thermostatic 31
Zone Type 11: Panic 32
Zone Type 13: Counting 33
Zone Type 15: Humidity Measurement 34
Arming / Disarming 35
Detector's Operating within the Polling Loop 37
Outputs of the Addressable Polling Loop *38*
Configuration Parameters of Addressable Outputs 39
Local Executive Programs for Controlling Polling Loop Outputs 40
Controlling S2000-KDL Input Zones and User Authorization *48*
Configuration Parameters of Readers and User Authenticators 48
Local Controlling Input Zones of the S2000-KDL 49
Centralized Control in the Orion System 50
Compatibility of Readers Used in Orion Systems 50
Light and Sound Indication *51*
S2000-KDL Light Alarms 51
Light Indication of Addressable Devices 53
Light and Sound Indication of the Reader 54
Communications Between the S2000-KDL and the Network Controller *56*
Transferring Alarms and Status Messages to a Network Controller 56
Remote Controlling the S2000-KDL over the RS-485 Interface 60
Installation **63**
Standard Delivery *64*
Safety Precautions *64*
S2000-KDL Mounting *64*
Connecting the Polling Loop *66*
Polling Loop Topology 66

SEC.RU | Короткий путь к информации Скачано с sec.ru

The Number of the Addressable Devices to Be Connected 68
Length of the Polling Loop 68
Connecting Addressable Devices ... *69*
Wiring the RS-485 Interface Line ... *70*
Connecting Power Supplies ... *70*
Connecting A Reader ... *70*
Connecting Readers with Touch Memory Output Interface 71
Connecting Readers with Wiegand Output Interface 72
Connecting an Arming Request Button (Optional) ... *73*
Getting Started ... *73*
Programming ... 75
S2000-KDL Address Space Allocation ... *76*
Programming Addresses of Devices Connected to the Pooling Loop ... *77*
Programming / Changing Device Loop Numbers by Network Controller Tools 77
Programming Address System of the S2000-KDL by Means of UProg ... *79*
UProg Interface 79
Work Settings of the Controller 81
Network Settings of the S2000-KDL *81*
Setting Operating Parameters of the S2000-KDL *81*
Programming Reader Parameters 84
Working with Addressable Devices Connected to the Polling Loop 85
Registering Addressable Devices Connected to the Polling Loop *86*
Programming Loop Addresses of Addressable Devices *88*
Requesting Parameters of Addressable Devices *89*
Programming Input Addressable Zones of the S2000-KDL 90
Setting the Descriptors of Input Addressable Zones *91*
Linking Inputs of the Polling Loop with its Outputs for Local Control *97*
Copying Settings of Input Addressable Zones *98*
Programming Addressable Outputs of the S2000-KDL 99
Programming Outputs for Remote Control *99*
Programming Outputs for Local Control *100*
Programming Access Groups 103
Programming Keys 105
Add / Edit a Key *107*
Delete the Key *108*
Managing the List of Keys *109*
Save Results *109*
Maintenance ... 111
Troubleshooting ... *112*
Locally Indicated Troubles 112
Troubles of the S2000-KDL Transferred to the Orion System 113
Preventive Maintenance ... *115*
Self-Diagnostic Routine 115

SEC.RU | Короткий путь к информации Скачано с sec.ru

GENERAL

SEC.RU | Короткий путь к информации Скачано с sec.ru

S2000-KDL Multiplex Addressable Polling Loop Controller (hereinafter referred to as the S2000-KDL or the controller) is the basic component of the SPI-2000A Addressable Message Transferring System which in turns is a part of an Orion integrated security system. The S2000-KDL provides designing complex and high informative addressable and analogue addressable installations to protect industrial, commercial, and residential premises of any size.

The S2000-KDL provides effective managing fire detection due to the facilities such as delayed sounder response to allow investigation time, day / night sensibility adjustment of individual devices, pre-alarm and contamination warning, etc. Through connected addressable executive modules the S2000-KDL can control executive devices such as light and sound alarms by means of one of the 37 available executive programs.

Built-in control tactics of the S2000-KDL enable using the controller in engineering systems providing releasing extinguishing agent, keeping temperature and humidity within the preset range, air conditioning and ventilation control, utility submetering, turning equipment on / off, reading digital output signals from engineering equipment, and so on.

A number of networked controllers – up to 63 x1024 S2000-KDL within a single Orion system – can be a base for creating flexible and high scalable systems providing centralized security monitoring for any sized applications scattered over large geographic areas with communicating data through various channels including public switched telephone networks, cellular networks, and LAN.

The S2000-KDL along with S2000-ASR2 consumption metering controllers can be used in specialized utility submetering installations operated under the *Resource* software. Also S2000-KDL controllers can be used to expand inputs of technological controllers S2000-T in building automation systems operating under *Algorithm* software.

The S2000-KDL provides *monitoring and control for up to 127 connected addressable devices* (see Figure 1). The following initiating devices as well as auxiliary devices can be polled by the S2000-KDL (in any combination):

- Analogue addressable photoelectric smoke detectors **DIP-34A**
- Analogue addressable fixed temperature and rate-of-rise detectors **S2000-IP**
- Addressable manual call points **IPR 513-3A**
- Addressable input modules **S2000-AR1**, **S2000-AR2**, **S2000-AR8** to provide connecting conventional (zone-type) detectors to the polling loop of the S2000-KDL
- Addressable intrusion detectors **S2000-IK**, **S2000-V**, **S2000-ST**, **S2000-STIK**, **S2000-SHIK**, **S2000-PIK**, **S2000-MW**, **S2000-SMK**, **S2000-SMK Estet**, etc.
- Addressable panic buttons **S2000-KT**
- Addressable expansion modules **LEM-Ex rev.2** to connect intrinsically safe alarm loops to the polling loop of the S2000-KDL
- Addressable combined temperature and humidity sensors **S2000-VT**
- Addressable controllers for two-pulse output meters **S2000-ASR2**

SEC.RU | Короткий путь к информации Скачано с sec.ru

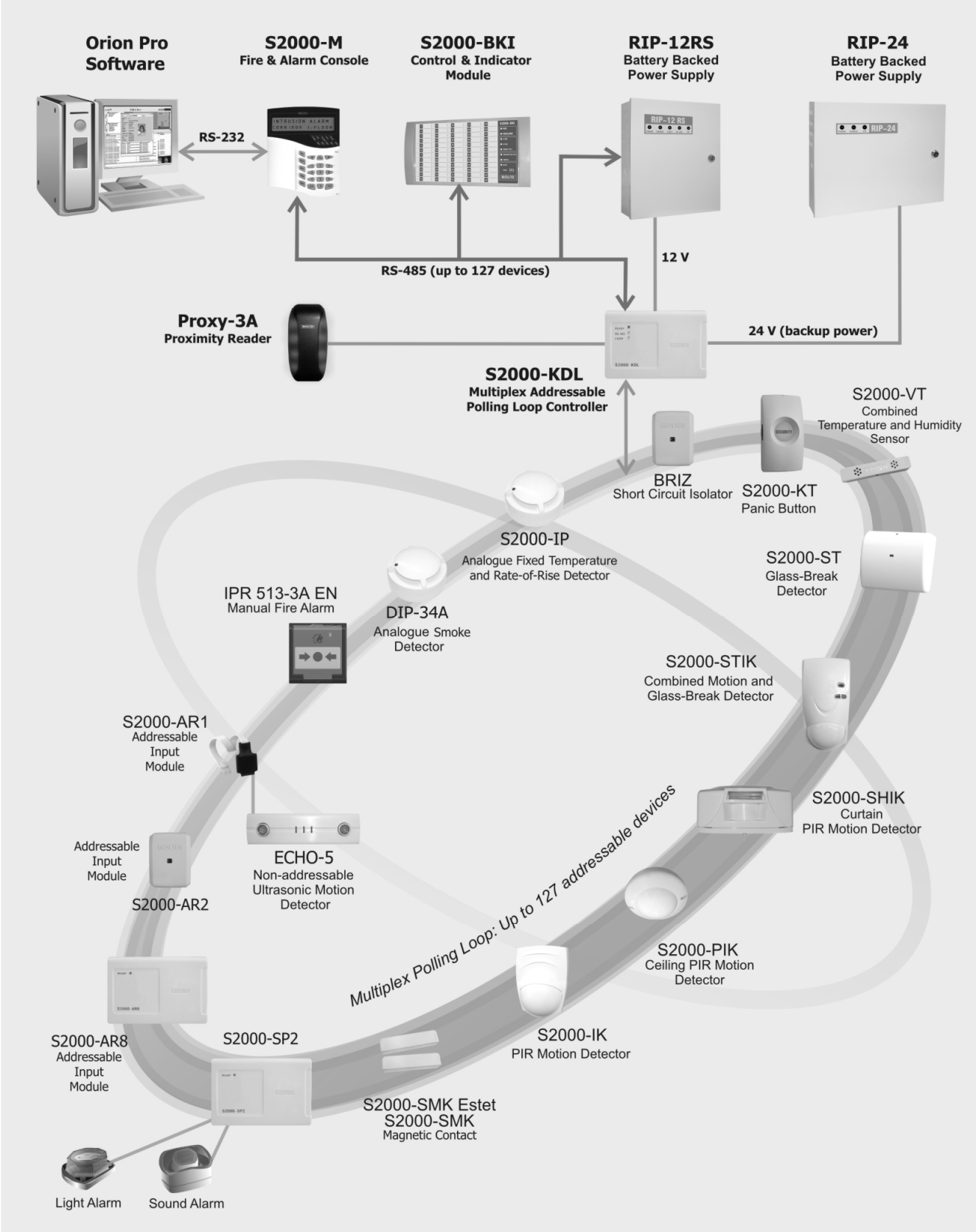

Figure 1. Analogue Addressable Message Transferring Systems Based on S2000-KDL

SEC.RU | Короткий путь к информации Скачано с sec.ru

The S2000-KDL polls the connected devices and coordinates their operating, powering them and communicating data via the polling loop.

The S2000-KDL provides 13 various monitoring tactics which can be programmed individually for each addressable zone of the polling loop. Among them:

- Five various tactics of monitoring fire protection zones
- Four tactics for monitoring zones protected against intrusions
- Four tactics for monitoring auxiliary (or technological) zones (including thermostatic, humidity measurement, and counting) used to integrate various measurement and signaling equipment into fire & intrusion alarm installations

In a small security system which doesn't require high informative the S2000-KDL can operate standalone activating connecting relay modules in response to changing zone conditions accordingly to programmed cause & effect logic. However, all features of the S2000-KDL can be fully realized only when it operates as a part of on Orion system under a network controller which can be S2000(M) control console or Orion Pro software. Operating under the network controller, the S2000-KDL transfers alarms and statuses of the polling loop and addressable zones over the RS-485 interface bus in order to display them remotely by means of the network controller, S2000-K keypads, S2000-BKI modules or to transmit them further to central monitoring stations via various communication channels (PSTN, cellular, Ethernet). Moreover, the S2000-KDL can activate centralized control mechanisms upon receiving relevant commands from the network controller.

The event log of the S2000-KDL can store up to 255 last events.

For authorized control of the system, an external ID reader with the output interface of Touch Memory or Wiegand can be connected to the special input of the S2000-KDL. The reader can be used both for local controlling addressable zones of the S2000-KDL (viewing zone statuses and arming / disarming) and for centralized remote control of various partitions of the Orion system (if the S2000-KDL works under a network controller). The S2000-KDL provides controlling light and sound *indication of the reader* to show system responses to user requests.

The user authenticators or electronic keys (Dallas iButtons, Proximity cards, or digital PIN codes) are to be preprogrammed, that is enrolled into the S2000-KDL memory with the rights to arm and / or disarm specific addressable zones of the controller (for local arming / disarming) or, alternatively, to the network controller database (for centralized control).

Three two-color LEDs located on the front panel of the S2000-KDL indicate respectively: controller's power conditions, conditions of communicating data through the RS-485 interface bus, and conditions of the polling loop and communicating data over the polling loop. A special option of the controller configuration provides the light indication which is need by requirements of European Standard

SEC.RU | Короткий путь к информации Скачано с sec.ru

EN54-2. Optionally, the S2000-KDL can also control the indication of connected addressable devices (if the devices support).

The controller is to be powered by one or two (main and extra) power supplies providing 12 V dc or 24 V dc. It is strongly advised to use Bolid manufactured battery backed power supplies of RIP series.

The S2000-KDL is programmed to meet particular user conditions and specific user needs by means of the configuration tool for Orion devices, the UProg. The latest version of the UProg Configuration Tool can be downloaded from the Bolid Company website at the address of www.bolid.com. To be programmed by means of UProg, the S2000-KDL must be connected to the PC with the installed UProg via one of the Bolid manufactured interface converters such as PI-GR, S2000-PI, S2000-USB, or USB-RS485.

The S2000-KDL is equipped with a tamper switch which provides tamper alarms when tamper conditions are changed and transferring the alarms to a network controller.

Non-volatile memory of the controller is used to store the network address of the S2000-KDL as well as its configuration parameters, event buffer, and counted values received from addressable pulse meter controllers S2000-ASR2 (if connected).

The multiplex addressable polling loop controller is intended for indoor installation and round-the-clock operation. The S2000-KDL is not suitable for operation in corrosive and dusty environments as well as fire-hazardous or explosive areas.

SEC.RU | Короткий путь к информации Скачано с sec.ru

SEC.RU | Короткий путь к информации
Скачано с sec.ru

SPECIFICATIONS

SEC.RU | Короткий путь к информации Скачано с sec.ru

➢ ***Controlled Addressable Devices***	Up to 127
➢ ***Indicators (LEDs)***	READY LED to indicate S2000-KDL power condition RS-485 LED to indicate communications over RS-485 LOOP LED to indicate loop condition
➢ ***Tamper Switch***	Built-in
➢ ***Event Lop Capacity***	255 events
➢ ***RS-485 Communication Port***	Yes
➢ ***Pre-Operation Time***	15 s max
➢ ***Power Supply***	Two power inputs Bolid manufactured RIP-12 or RIP-24 battery backed power supplies are advisable
➢ ***Input Voltage***	10.2 V ÷ 28.4 V dc
➢ ***Input Current***	
At 12 V	400 mA maximum value, 80 mA with no connected devices, 160 mA with 127 connected addressable devices with current consumption of 0.5 mA each
At 24 V	200 mA maximum value, 40 mA with no connected devices, 80 mA with 127 connected addressable devices with current consumption of 0.5 mA each
➢ ***Input Power***	4 W max
➢ ***Polling Loop***	127 addressable zones
Connectable Devices	– Addressable fire and intrusion detectors – Addressable call points and panic buttons – Addressable input modules to connect dry contact detectors – Addressable loop expansion modules – Addressable temperature & humidity sensors – Addressable executive modules – Addressable consumption meters
Maximum Length	700 m at wire cross section of 0.75 mm^2 (with wire diameter at least 0.9 mm)

SEC.RU | Короткий путь к информации
Скачано с sec.ru

Loop Voltage	10 V
Loop Current	The total current consumption of all connected addressable devices must NOT exceed 100 mA
➢ ***External ID Reader***	One Reader Input to connect an external reader of Dallas iButtons, Proximity cards, or PIN codes
Output Interfaces	Touch Memory (1-Wire, µ-LAN), Wiegand
Reader LEDs	Controlling one or two reader LEDs by logical +5 V CMOS levels, with current values being restricted by 10 mA at direct connection
Sounder	Controlled by logical +5 V CMOS levels
Distance	No more than 100 m from the S2000-KDL
➢ ***ID Memory Capacity***	Up to 512 ID Codes
➢ ***Operating Temperatures***	–30 °C to +50 °C
➢ ***Relative Humidity***	Up to 98% at +25 °C
➢ ***Ingress Protection Rating***	IP20
➢ ***Overall Dimensions***	157 mm x 107 mm x 36 mm
➢ ***Weight***	about 0.3 kg
➢ ***Average Lifetime***	10 years
➢ ***Programming***	By means of the UProg.exe, the tool for configuring Orion system devices
➢ ***Connection to a PC***	Over RS-485 interface bus via one of the Bolid manufactured interface converters PI-GR, S2000-PI, S2000-USB, or USB-RS485

SEC.RU | Короткий путь к информации Скачано с sec.ru

SEC.RU | Короткий путь к информации
Скачано с sec.ru

OPERATION PRINCIPLES

SEC.RU | Короткий путь к информации Скачано с sec.ru

MULTIPLEX ADDRESSABLE POLLING LOOP OF THE S2000-KDL

Two-wire addressable polling loop of the S2000-KDL is designed to communicate data with 127 addressable zones, with each zone being configured (depending on the kind of connected addressable device) either as:

- *An Input Zone* which can be physically represented by an addressable fire or intrusion detector or call point, monitored circuit of an addressable input module, temperature / humidity sensor, monitored circuit of a consumption meter S2000-ASR2, and so on, or
- *An Output*, which can be represented by a S2000-SP2 relay output or virtual output of a LEM-Ex rev.2 and so on.

The addressable polling loop can operate in one of two available modes:

- *Initialization*, or
- *Quiescent Poll*

After starting powering the controller or internal reset, the polling loop of the S2000-KDL enters the *Initialization* mode. In such mode the controller starts powering addressable devices and gathering information about programmed and actually connected addressable devices.

Gathering information, the controller requests types of devices around the entire address range (1 to 127). If the type of a connected addressable device doesn't match the pre-programmed type of this one or the type of the programmed zone (the programmed monitoring tactics) doesn't match the device type, the addressable zone is assigned to the *Zone Configuration Error* status and the relevant message is transmitted over the RS-485 interface.

In case of *Quiescent Poll*, regardless of the zone status, the controller inspects connectivity and statuses of those addressable devices which are currently connected to the S2000-KDL. Also the controller periodically searches connected devices at vacant addresses, searching devices at the addresses for which addressable device's types are programmed in the console configuration being of higher priority than at the addresses for which device types are not programmed.

Output circuits of the polling loop are implemented as two output branches, PL1 and PL2. That provides wiring any topology of the polling loop such as a bus, a tree, a ring, or mixed.

The ring topology provides detecting failures of the polling loop. In case of polling loop's being open the controller generates 2WIRE 1 LOST and / or 2WIRE 2 LOST message. For zones for which communications between its related addressable devices and one of the polling loop outputs is lost the relevant statuses will be assigned. After reconnecting addressable devices with the controller at the PL1 port and / or the PL2 port 2WIRE 1 RST and / or 2WIRE 2 RST messages will be generated.

To locate short circuit failures, BRIZ short circuit isolators are to be brought to the polling loop. Also these isolators are used to make branches in the polling loop and to avoid effects of failures in one

SEC.RU | Короткий путь к информации Скачано с sec.ru

loop segments to another segment. When a short circuit failure has happened, failed part of the loop between two BRIZ'es (in case of ring topology) of behind the relevant BRIZ is disabled, with the controller generating 2WIRE 1 LOST and / or 2WIRE 1 LOST messages. On recovering normal polling loop conditions the BRIZ automatically restores connection between isolated segments, and the controller generates 2WIRE 1 RST and / or 2WIRE 2 RST messages.

If communications with an addressable device is lost for both polling loop outputs, the zone is switched to the Disconnected status. In such case the controller remembers the previous status of the zone and having found the device with the stored address at one of the polling loop outputs (when the device is connected again) the status of the zone will be restored. For example, if a zone had Armed status before losing then after restoring communications the zone will also have Armed status.

SEC.RU | Короткий путь к информации Скачано с sec.ru

INPUT ZONES OF THE POLLING LOOP

The input zones of the S2000-KDL are the points of connecting initiating addressable devices to the polling loop. Up to 127 various respondent addressable devices can be connected to the S2000-KDL among them (in any combination):

- Analogue addressable photoelectric smoke detectors DIP-34A
- Analogue addressable fixed temperature and rate-of-rise detectors S2000-IP
- Addressable manual call points IPR 513-3A
- Addressable input modules S2000-AR1, S2000-AR2, S2000-AR8 to provide connecting conventional (zone-type) detectors into the polling loop of the S2000-KDL
- Addressable intrusion detectors S2000-IK, S2000-V, S2000-ST, S2000-STIK, S2000-SHIK, S2000-PIK, S2000-MW, S2000-SMK, S2000-SMK Estet, etc.
- Addressable panic buttons S2000-KT
- Addressable loop extension modules LEM-Ex rev.2 to provide connecting intrinsically safe dry contact detectors
- Addressable combined temperature and humidity sensors S2000-VT
- Addressable controllers S2000-ASR2 for two pulse output consumption meters

Some addressable devices can occupy several addresses within the address space of the polling loop (see manuals for the devices being in use).

Having polled the connected addressable devices, *the controller assigns all the addressable zones to some logic statuses*, depending on:

- The status returned by the addressable device and the parameter value measured by the device (such as optical density, temperature, etc.) or the resistance measured in the monitored circuit of the input module (for non-addressable detectors), and
- The monitoring tactics given for the addressable zone or its Zone Type (all monitoring tactics supported be the S2000-KDL as well as appropriate zone statuses will be considered below in this Section), and
- The current monitoring status of the zone (whether the zone is armed or disarmed)

Having assigned statuses to zones, the S2000-KDL:

- Automatically transfers changed zone statuses over the RS-485 interface, and
- If preprogrammed in its local configuration, controls its executive outputs, and
- Returns current zone statuses (if requested locally) by light indicator and sounder of the reader connected to the S2000-KDL

SEC.RU | Короткий путь к информации Скачано с sec.ru

Zone's Configuration Parameters

Table 1 shows the list of configuration parameters that can be programmed for the S2000-KDL to define various tactics of operating input zones of the polling loop.

Table 1. Parameters of Input Addressable Zones of the S2000-KDL

Parameter	Description	Range	Factory value
Zone Type	Defines monitoring tactics for a zone and a range of connectable addressable devices (intrusion or fire equipment; temperature or smoke detector, etc.)	1 ÷ 11, 13, 15 (see below)	5
Auto Rearming	Automatic switching from *Arming Failed* status to *Armed* status after zone's being restored	On / Off	Off
Auto Arming After Alarm	Automatic switching from *Intrusion Alarm*, *Fire Alarm*, or *Fire Prealarm* status to the *Armed* status upon restoring the zone	On / Off	Off
Disarmed Zone Monitoring	Enables to transfer status changes for disarmed intrusion zones of types 4, 5, 7, 11	On / Off	Off
Never Disarmed	The zone is armed permanently and cannot be disarmed	On / Off	Off
Arm / Disarm by Group	Upon controller's receiving a Group Arming / Disarming command from the network controller, all zones with this parameter being set are armed / disarmed all at once (the parameter is valid only for those zones which are assigned to specific device types in the controller database)	On / Off	Off
Arming Delay	The delay between receiving an arming command and switching the zone to the *Armed* status	0…255 s	0
Recovery Time	The time during which a zone of the Type #6 should be in norm to consider this zone to be recovered. Also this is the time for operating given tactics *Auto Arming After Alarm*, *Disarmed Zone Monitoring*	0…255 s	0

SEC.RU | Короткий путь к информации Скачано с sec.ru

Parameter	Description	Range	Factory value
Alarm Delay	When this time is elapsed the zone of the Type #7 will be switched from *Entrance Alarm* status to the *Intrusion Alarm* status	0…255 s	0
Fire Day Sensitivity Threshold	The level of smoke (in terms of standard units) to respond with a *Fire Alarm* message for *Day* mode	90…120	100
Prealarm Day Sensitivity Threshold	The level of smoke (in terms of standard units) to respond with a *Fire Prealarm* message for *Day* mode	70…90	80
Fire Night Sensitivity Threshold	The level of smoke (in terms of standard units) to respond with a *Fire Alarm* message for *Night* mode "	80…100	90
Prealarm Night Sensitivity Threshold	The level of smoke (in terms of standard units) to respond with a *Fire Prealarm* message for *Night* mode	70…80	70
Contamination Threshold (for Type #8)	The level of dust in the smoke chamber of the detector (in terms of standard units) to respond with a *Service Required* message	10…60	50
Fire Temperature	The value of temperature in ^{o}C to respond with Fire Alarm message	+54 ^{o}C …+85 ^{o}C	54
Prealarm Temperature	The value of temperature in ^{o}C to respond with Fire Prealarm message	0 ^{o}C …+81 ^{o}C	50
Temperature Decreased Threshold	The value of temperature in ^{o}C to respond with Temperature Low message	– 55 ^{o}C …+125 ^{o}C	20
Temperature Increased Threshold	The value of temperature in ^{o}C to respond with Temperature High message	– 55 ^{o}C …+125 ^{o}C	22
Humidity Decreased Threshold	The value of relative humidity in % to respond with Level Low message	0…100 %	60
Humidity Increased Threshold	The value of relative humidity in % to respond with Level High message	0…100 %	70
Device Indication Control	0 – Indication Disabled (the S2000-KDL disables device indication); 1 – Standalone indication control; 2 – Controlling device indication by the S2000-KDL	0…2	1

SEC.RU | Короткий путь к информации Скачано с sec.ru

Parameter	Description	Range	Factory value
Save Mode	Switches the addressable device to the energy save mode depending on the zone status (for example, in the Disarmed status)	On / Off	Off
Counting Threshold	For the zone of the Type#13 this is the number of pulses which are to accumulated by the S2000-ASR2 until this number will be sent to the S2000-KDL	0…65535	1000
Counter Integral Action Time	For the zone of the Type#13 this is the integral action time for filtering in monitored circuits noises with frequency more than frequency of counted pulses	0.5 ms…127.5 ms	1
Night-to-Day Threshold (for Type 8)	The time when the Night operating mode of the detector is turned off while the Day mode is turned on (HH:MM)	00:00…23:59	09:00
Day-to-Night Threshold (for Type 8)	The time when the Day operating mode of the detector is turned off while the Night mode is turned on (HH:MM)	00:00…23:59	21:00

The main configuration parameter of each zone which defines tactics of its monitoring and available kinds of monitored devices is **Zone Type**.

The S2000-KDL supports the following types of zones of different functionality:

- ***Fire***
  - 1 – Smoke Fire
  - 2 – Combined Fire
  - 3 – Heat Fire
  - 8 – Smoke Analogue With Programmable Thresholds
  - 9 – Heat Analogue With Programmable Thresholds
- ***Intrusion***
  - 4 – Intrusion
  - 5 – Intrusion With Tamper Check
  - 7 – Entrance
  - 11 – Panic
- ***Auxiliary***
  - 6 – Auxiliary
  - 10 – Thermostatic
  - 13 – Counting
  - 15 – Humidity Measurement

All types of zones along with their specific parameters will be considered in following Sections. Here we will describe parameters common for a number of input addressable zones of the polling loop.

SEC.RU | Короткий путь к информации Скачано с sec.ru

The parameter **Auto Rearming** is to be set if the zone being in the Disarmed status (see Section *Arming / Disarming* below) is supposed to be armed automatically when it is recovered after breaking.

The parameter **Auto Arming After Alarms** provides automatic switching from the statuses Intrusion Alarm, Fire Alarm, and Fire Prealarm to the Armed status upon recovering the zone after its breaking. In such a case, to be armed the zone must be in norm during the time more or equal to **Recovery Time**.

If the parameter **Disarmed Loop Monitoring** is set on for a zone of the Type #**4**, #**5**, #**7**, or **11** then the status changes of the zone will be monitored even though it is disarmed. When the zone has been broken / recovered the controller generates messages Not Ready To Arm and Ready To Arm respectively. The zone to be considered as recovered it must be in norm for a time equal to **Recovery Time**.

If a zone must be monitored (be armed) round the clock use the parameter **Never Disarmed**. This parameter is set on for fire protection and panic zones #**1**, #**3**, and #**11** to avoid their accidental disarming. When a Disarm command has been received for a zone which Never Disarmed parameter is set on, the zone either enters the armed status if it was in norm previously or, otherwise, the controller generates a message about the current status of the zone.

The parameter **Arm / Disarm by Group** provides simultaneous arming or disarming all the zones, for which this parameter is set on, using the command Group Arming (Disarming). The option is only valid for zones which are assigned to specific device types in the controller database.

The **Alarm Delay** parameter defines a time (in seconds) in which the controllers tries to arm the zone after generating relevant command. Non-zero alarm delay is used for intrusion zones, for example, for an entrance door, in order a user to have some time to leave premises after arming the security system.

The **Save Mode** parameter allows regulating power consumption of the addressable device depending on the status of the device's zone. For detectors with microwave modules this parameter provides switching off the active element to reduce the impact of microwave radiation on people in the protected premises. An addressable device is switched to the Save Mode on zone's entering the Disarmed status, the parameter **Disarmed Loop Monitoring** being ignored.

Switching to the Save Mode is only provided for those addressable devices which support this mode and the communication protocol DPLS_v2.xx (see manuals of addressable devices)

The **Device Indication Control** parameter defines the indication mode of the addressable device connected to the current input zone of the S2000-KDL. The values of this parameter and the relevant indication modes can be as follows:

SEC.RU | Короткий путь к информации Скачано с sec.ru

0	Indication Disabled (the S2000-KDL disables device indication)
1	The LED of the addressable device indicates *statuses of the addressable device and the parameter monitored by the device* according to own pre-programmed tactics of the device, as described in the device specification
2	LED indication is controlled by a S2000-KDLlogic and *shows zone statuses* (see Section *Light Indication of Addressable Devices* of this Manual)

Controlling the LED is only provided for those addressable devices which support the communication protocol DPLS_v2.xx (see manuals of addressable devices).
To provide controlling LEDs of conventional detector from third party manufacturers interface them in the polling loop through the input modules S2000-AR1 rev.04

Zone Type 1: Smoke Fire

A zone of Type 1 is designed to monitor photoelectric smoke detectors DIP-34A operated in threshold-addressable mode returning the controller fire alarm statuses when the smoke level measured by the detector exceeds the internal threshold of the detector.

Available statuses of a zone of the Type #1 are the following:

ARMED	The zone is fully monitored
DISARMED	The zone is in norm if there is no faults
ARMING DELAY	Arming the zone is delayed until the Arming Delay time has elapsed
ARMING FAILED	The parameter monitored by the addressable device is out of normal range at the time of arming the zone
FIRE ALARM	The DIP-34A has detected smoke level's exceeding its own sensitivity threshold
OPEN FAILURE	(see Table 2)
TROUBLE	The DIP-34A fails to measure smoke level
SERVICE REQUIRED	A contamination self-compensation threshold for the smoke chamber of the DIP-34A has been exceeded

Zone Type 2: Combined Fire

Zones of the Type#2 are expected to monitor statuses of the addressable input modules S2000-AR2, S2000-AR8, and loop expansion modules LEM-Ex rev.2 providing sensing such statuses of monitored circuits as Norm, Fire Alarm, Open Failure, and Short Failure.

Available statuses of a zone of the Type #2 are the following:

SEC.RU Короткий путь к информации Скачано с sec.ru

ARMED	The zone is fully monitored
DISARMED	The zone is in norm if there is no faults
ARMING DELAY	Arming the zone is delayed until the Arming Delay time has elapsed
ARMING FAILED	The parameter monitored by the addressable device is out of normal range at the time of arming the zone
FIRE ALARM	(see Table 2)
OPEN FAILURE	(see Table 2)
SHORT FAILURE	(see Table 2)

Table 2. How the S2000-KDL Interprets Statuses of the Input Modules' Monitored Circuits

Zone Type	Available Statuses of Monitored Circuits				
	Norm	***Alarm***	***Open Failure***	***Short Failure***	***Tamper Alarm***
1	Armed	Open Failure	Open Failure	Fire Alarm	–
2	Armed	Fire Alarm	Open Failure	Short Failure	–
3	Armed	Short Failure	Fire Alarm	Short Failure	–
4	Armed	Intrusion Alarm	Intrusion Alarm	Intrusion Alarm	–
5	Armed	Intrusion Alarm	Intrusion Alarm	Intrusion Alarm	Intrusion Alarm
6	Norm	Trouble	Trouble	Trouble	–
7	Armed	Entrance Alarm	Entrance Alarm	Entrance Alarm	Intrusion Alarm
11	Armed	Panic Alarm	Panic Alarm	Panic Alarm	Panic Alarm

NOTES: The status Alarm is available only for S2000-AR2 and S2000-AR8 modules. All statuses of monitored circuits shown in the table concern zones being in the Armed status expect for zones of the Type #6.

Zone Type 3: Heat Fire

The following devices can be assigned to a zone of the Type #3:

a) analogue addressable fixed temperature and rate-of-rise detectors S2000-IP, S2000-IP rev.01, and S2000-IP rev.02 operated in addressable threshold mode, or

b) S2000-AR1 addressable single-input modules to connect dry contact fire heat detectors into the polling loop, or

c) IPR 513-3A addressable manual call points

SEC.RU | Короткий путь к информации Скачано с sec.ru

Available statuses of a zone of the Type #3 are the following:

ARMED	The zone is fully monitored
DISARMED	The zone is in norm if there is no faults
ARMING DELAY	Arming the zone is delayed until the Arming Delay time has elapsed
ARMING FAILED	The parameter monitored by the addressable device is out of normal range at the time of arming the zone
FIRE ALARM	– The heat detector has registered temperature's change or exceeding the predetermined value corresponding to a condition of entering Fire Alarm status (fixed temperature and rate-of-rise mode), or – The manual call point has been activated (its glass has been broken), or – As shown in Table 2 for the S2000-AR1
SHORT FAILURE	(see Table 2)
TROUBLE	The S2000-IP fails to measure temperature

Zone Type 4: Intrusion

A zone of the Type #4 is to be used to monitor any intrusion detectors which are not supposed to send signals about tampering the detector (or which doesn't support transmitting tamper alarms). These zones are recommended to assign to:

a) S2000-SMK addressable magnetic contacts, or

b) S2000-SMK Estet addressable magnetic contacts for metal doors, or

c) S2000-AR2 addressable double-input modules, or

d) LEM-Ex rev.2 loop expansion modules to connect conventional intrinsic safe intrusion detectors

Available statuses of a zone of the Type #4 are the following:

ARMED	The zone is fully monitored
DISARMED	The zone is in a norm (the **Disarmed Loop Monitoring** parameter being set on); there is no faults
NOT READY TO ARM	The zone has been broken being disarmed (the **Disarmed Loop Monitoring** parameter being set on)
TROUBLE	The addressable device has failed
ARMING DELAY	Arming the zone is delayed until the Arming Delay time has elapsed

SEC.RU | Короткий путь к информации Скачано с sec.ru

ARMING FAILED	The parameter monitored by the addressable device is out of normal range at the time of arming the zone
INTRUSION ALARM	– The addressable detector has responded with an alarm (for example, breaking a glass has detected or infrared field has been violated), or – The contacts of the S2000-SMK has been open, or – The addressable device has failed provided that the zone was armed, or – The addressable input module has been in one of the statuses shown in Table 2

Zone Type 5: Intrusion with Tamper Monitoring

A Zone of the Type #5 defines the tactics of monitoring addressable devices which provides not only generating intrusion alarms but also responding with special signals when their enclosure is open. The following addressable devices can be connected to zones of the Type 5:

a) S2000-ST addressable glass break detectors, or

b) S2000-IK addressable passive infrared motion detectors, or

c) S2000-PIK addressable ceiling-mount motion detectors, or

d) S2000-MW addressable microwave intrusion detectors, or

e) S2000-STIK addressable combined motion and glass break detector, or

f) S2000-PIK-ST addressable combined ceiling-mount motion and glass break detectors, or

g) S2000-SHIK addressable curtain PIR motion detectors, or

h) S2000-V addressable shock detectors, or

i) S2000-SMK addressable magnetic contacts, or

j) S2000-SMK Estet addressable magnetic contacts for metal doors, or

k) S2000-KT addressable panic buttons, or

l) S2000-AR1, S2000-AR2, and S2000-AR8 addressable input modules, or

m) LEM-Ex rev.2 intrinsically safe loop extension modules

Available statuses of a zone of the Type #5 are the following:

ARMED	The zone is fully monitored
DISARMED	The zone is in a norm (the **Disarmed Loop Monitoring** parameter being set on); the addressable device enclosure is closed, the TAM-

SEC.RU | Короткий путь к информации Скачано с sec.ru

	PER contacts of the S2000-AR1 is closed, there is no faults
TAMPER ALARM	The zone being in one of the statuses Disarmed, Arming Failed, or Arming Delay, the enclosure of the addressable device or addressable input module is open, or the TAMPER contacts of the S2000-AR1 is open
NOT READY TO ARM	The zone has been broken being disarmed (the **Disarmed Loop Monitoring** parameter being set on)
TROUBLE	The addressable device has failed
ARMING DELAY	Arming the zone is delayed until the Arming Delay time has elapsed
ARMING FAILED	The parameter monitored by the addressable device is out of normal range at the time of arming the zone
INTRUSION ALARM	– The addressable detector has responded with an alarm (for example, breaking a glass has detected or infrared field has been violated), or – The contacts of the S2000-SMK has been open, or – The detector enclosure has been open, or – The addressable device has failed provided that the zone was armed, or – The status or the input module's monitored zone is not Norm

Zone Type 6: Auxiliary

Auxiliary zones are intended to monitor statuses of doors in gaseous and dry chemical fire suppressing systems, to monitor conditions of fire protection equipment, to block executing of tactics concerning to fixed firefighting systems as well as to monitor conditions of equipment and alarms not directly connected with the security and fire alarm systems.

All addressable devices designed to work within the polling loop can be included into zones of the Type #6, except S2000-ASR2 utility meters and S2000-VT combined temperature and humidity sensors.

Available statuses of a zone of Type #6 are the following:

AUXILIARY ZONE RESTORED	The zone is fully monitored
AUXILIARY ZONE ALARM	Status of the detector or monitored circuit (as shown in Table 2) differs from Norm

SEC.RU | Короткий путь к информации Скачано с sec.ru

The zone is switched from the Auxiliary Zone Restored status to the Auxiliary Zone Alarm status when the relevant detector or monitoring circuit of the input module responds with an alarm i(for monitored circuits see Table 2). The zone is switched from the Auxiliary Zone Alarm status to the Auxiliary Zone Restored status if it has been in norm for the time equal to **Recovery Time** – see Section *Zone's Configuration Parameters* of this Manual.

Zone Type 7: Entrance

The Zone Type #7 (Entrance Zone) is similar to the Zone Type #5 except that breaking an armed zone of the Type #7 switches the zone firstly to the Entrance Alarm status. If after elapsing some pre-determined time no measures are taken to disarm the zone or to arm it then the zone is switched to the Intrusion Alarm status.

While the zone is being in the Entrance Alarm status no relay assigned to this zone with one of the general executive programs (programs #1 to #8) or the Siren program (program #12) is activated. This allows a user entering the premises to reach the place where the alarm system control is located and to disarm the system without issuing alarms.

The time during which breaking an entrance zone is not considered to be an intrusion and no intrusion alarm is generated is defined by the **Alarm Delay** parameter in the controller configuration individually for each zone. If this parameter I set to zero for a zone then upon breaking the zone the Entrance Alarm status will be bypassed and the zone will be switched to the Intrusion Alarm status immediately.

The following addressable devices can be assigned to zones of the Type #7:

a) S2000-IK addressable passive infrared motion detectors, or

b) S2000-SHIK addressable curtain PIR motion detectors, or

c) S2000-SMK and S2000-SMK Estet addressable magnetic contacts, or

d) S2000-AR1, S2000-AR2, and S2000-AR8 addressable input modules, or

e) LEM-Ex rev.2 intrinsically safe loop extension modules

Available statuses of a zone of the Type #7 are the following:

ARMED	The zone is fully monitored
DISARMED	The zone is in a norm (the **Disarmed Loop Monitoring** parameter being set on); the addressable device enclosure is closed, the TAMPER contacts of the S2000-AR1 is closed, there is no faults
TAMPER ALARM	The enclosure of the addressable detector or input module being in statuses Disarmed, or Arming Failed, or Arming Delay is open
NOT READY TO ARM	The zone has been broken, the **Disarmed Loop Monitoring** parameter being set on

SEC.RU | Короткий путь к информации Скачано с sec.ru

TROUBLE	The addressable device has failed
ARMING DELAY	Arming the zone is delayed until the Arming Delay time has elapsed
ARMING FAILED	The parameter monitored by the addressable device is out of normal range at the time of arming the zone
ENTRANCE ALARM	– The addressable detector has responded, or – The contacts of the S2000-SMK has been open, or – The monitored circuit of the addressable input module has entered one of the statuses described by Table 2 for zones of the Type #7
INTRUSION ALARM	– The **Alarm Delay** time has elapsed after zone's having entered the Entrance Alarm status – An addressable device trouble has occurred, with the zone being armed

Zone Type 8: Smoke Analogue With Programmable Thresholds

A zone of the Type #8 is intended to monitor analogue addressable smoke photoelectric detectors DIP-34A, DIP-34A rev.01, and DIP-34A rev.02 operated in analogue mode.

The polling loop being in the quiescent mode, the controller requests the digital values of smoke concentration measured by the detector. For each zone of the Type #8 the **Prealarm Sensitivity Threshold** and **Fire Sensitivity Threshold** are to be programmed to issue fire prealarms and fire alarms respectively. These thresholds are programmed for **Day Mode** and **Night Mode** separately.

Periodically the S2000-KDL requests the values of contamination within smoke chamber of the detector and compares these values with the **Contamination Thresholds** programmed for each zone of the Type #8 individually.

Available statuses of a zone of the Type #8 are the following:

ARMED	The zone is entirely monitored; no preprogrammed thresholds (**Fire Sensitivity Threshold**, **Prealarm Sensitivity Threshold**, or **Contamination Threshold**) are exceeded
DISARMED	The zone is monitored only for troubles and exceeding the **Contamination Threshold**
ARMING DELAY	Arming the zone is being delayed
ARMING FAILED	While the zone is being armed, one or more of its programmed thresholds for the current time mode (**Fire Sensitivity Threshold**, **Prealarm Sensitivity Threshold**, or **Contamination Threshold**) is exceeded or a trouble has occurred

SEC.RU | Короткий путь к информации Скачано с sec.ru

FIRE PREALARM	The smoke concentration measured by the detector has exceeded the **Prealarm Sensitivity Threshold** preprogrammed for the zone for the current time-of-the-day mode (Night / Day)
FIRE ALARM	The smoke concentration measured by the detector has exceeded the **Fire Sensitivity Threshold** preprogrammed for the zone for the current time-of-the-day mode (Night / Day)
TROUBLE	The DIP-34A fails to measure smoke level
SERVICE REQUIRED	The **Contamination Threshold** or the contamination self-compensation threshold for the smoke chamber of the DIP-34A has been exceeded

Zone Type 9: Heat Analogue With Programmable Thresholds

A zone of the Type #9 is intended to monitor analogue addressable fixed temperature and rate-of-rise detectors S2000-IP, S2000-IP rev.01, and S2000-IP rev.02 operated in analogue mode.

The polling loop being in the quiescent mode, the controller requests the digital values of temperature measured by the detector. For each zone of the Type #9 the **Prealarm Sensitivity Threshold** and **Fire Sensitivity Threshold** are to be programmed to issue fire prealarms and fire alarms respectively.

Available statuses of a zone of the Type #9 are the following:

ARMED	The zone is monitored; neither Fire nor Prealarm thresholds are exceeded
DISARMED	The zones is monitored only for troubles
ARMING DELAY	Arming the zone is delayed until the Arming Delay time has elapsed
ARMING FAILED	While the zone is being armed, one or more of its programmed thresholds (**Fire Sensitivity Threshold** or **Prealarm Sensitivity Threshold**) is exceeded or a trouble has occurred
FIRE PREALARM	The temperature measured by the detector has exceeded the **Prealarm Sensitivity Threshold** preprogrammed for the zone
FIRE ALARM	The temperature measured by the detector has exceeded the **Fire Sensitivity Threshold** preprogrammed for the zone
TROUBLE	The detector fails to measure temperature

SEC.RU | Короткий путь к информации Скачано с sec.ru

Zone Type 10: Thermostatic

This type of zones provides using fire heat detectors as temperature meters and to create thermal control systems.

The polling loop being in the quiescent mode, the controller requests the digital values of temperature measured by the detector at its location point. Arm and Disarm commands provide involving and excluding the zone from the thermostatic system respectively.

The following devices can be assigned to a zone of the Type #10:

a) analogue addressable fixed temperature and rate-of-rise detectors S2000-IP, S2000-IP rev.01, and S2000-IP rev.02 used to measure temperature at the location point of the detector

b) S2000-VT combined temperature and humidity sensors (temperature measurement channel)

Available statuses of a zone of the Type #10 are the following:

DISARMED	The zone is monitored only for troubles; the S2000-KDL neither analyses temperature values received from the device nor outputs messages about temperature increasing / decreasing; zone statuses don't affect thermal control process
ARMING DELAY	Delaying to use the zone in thermal control system operating
TEMPERATURE LOW	The measured temperature has dropped below the value of **Temperature Decreased Threshold** predetermined for the zone
TEMPERATURE HIGH	The measured temperature has exceeded the value of **Temperature Increased Threshold** predetermined for the zone
TEMPERATURE NORM	The measured temperature is between values of **Temperature Decreased Threshold** and **Temperature Increased Threshold** predetermined for the zone
TROUBLE	The device fails to measure temperature

The following configuration parameters are to be programmed for a zone of the Type #10 (see also Table 1):

Temperature Increased Threshold: the value of temperature in degrees Centigrade at the location point of the device for the zone to be considered in the Temperature High status

Temperature Decreased Threshold: the value of temperature in degrees Centigrade at the location point of the device for the zone to be considered in the Temperature Low status

SEC.RU | Короткий путь к информации Скачано с sec.ru

Arming Delay for a Thermostatic zone defines the time in seconds, that should pass between controller's receiving an Arm command and starting requesting temperature measurements for the zone

DO NOT confuse the temperature increased / decreased thresholds defined for the Thermostatic zone and the same thresholds defined for addressable outputs of the S2000-KDL.

Temperature value's being out of the range programmed for a Thermostatic zone causes the S2000-KDL to switch the zone to the Temperature High / Temperature Low status and to transmit the relevant message to the network controller.

If, on the contrary, measured temperature values are out of the range programmed for an output assigned with this zone in the S2000-KDL configuration, the controller activates the output as defined by its predetermined executive program. The controller also transmits the changed output status to the network controller if the relevant switch in the output's settings allows that – see Section Configuration Parameters of Addressable Outputs.

Zone Type 11: Panic

A zone of the Type #11 (Panic zone) realizes a tactics of hidden alarms when the controller having received a detector alarm response generate a special message Silent Alarm but neither light nor sound alarms are tuned on.

The following devices can be monitored as zones of the Type #11:

a) S2000-KT Addressable Panic Button, or

b) Addressable input modules interfaced various panic buttons and pedals, or

c) S2000-SMK and S2000-SMK Estet Addressable Magnetic Contacts

d) LEM-Ex rev.02 Loop Expansion Module interfaced intrinsically safe alarm loops

Available statuses of a zone of the Type #11 are the following:

ARMED	The zone is fully monitored
DISARMED	The zone is in a norm (the **Disarmed Loop Monitoring** parameter being set on); the addressable device enclosure is closed, the TAMPER contacts of the S2000-AR1 is closed, there is no faults
TAMPER ALARM	The enclosure of the addressable detector or input module being in statuses Disarmed, or Arming Failed, or Arming Delay is open
NOT READY TO ARM	The zone has been broken, the **Disarmed Loop Monitoring** parameter being set on

SEC.RU | Короткий путь к информации Скачано с sec.ru

TROUBLE	The addressable device has failed
ARMING DELAY	Arming the zone is delayed until the Arming Delay time has elapsed
ARMING FAILED	The parameter monitored by the addressable device is out of normal range at the time of arming the zone
PANIC ALARM	Breaking of the monitored circuit of the input module has been detected (see Table 2); the device has failed provided that the zone is being armed

Zone Type 13: Counting

A zone of the Type #13 is designed to connect addressable controllers S2000-ASR2 with one or two included pulse output meters (of water, gas, etc.)

Available statuses of a zone of Type 13 are the following:

CONNECTED	The S2000-ASR2 is connected; pulses are being counted
SHORT CIRCUIT	A short circuit failure in a monitored circuit of the S2000-ASR2; no pulses are counted
OPEN CIRCUIT	A monitored circuit of the S2000-ASR2 is open; no pulses are counted

This type of zone is to be used when the addressable pulse-meter controllers connected to the S2000-KDL operate in a utility submetering system controlled by Recourse or Orion Pro software.

An S2000-ASR2 is designed to control utility meters with pulse outputs for which a single pulse corresponds to a certain amount of measured physical material. The counted number of pulses is stored in the RAM of the S2000-ASR2, so on shutting off the power of the S2000-ASR2 the accumulated number is lost. So, for a zone of the Type #13 the parameter **Counting Threshold** is to be specified, which is a number of pulses that are accumulated in the S2000-ASR2 memory before sending this number to the S2000-KDL. The controller summarizes the received values and stores them into own non-volatile memory. The maximum number of pulses that can be stored in the memory of the S2000-KDL is $2 \cdot 10^{14}$.

The value of **Counting Threshold** should be selected so that, on the one hand, this value can be ignored in case of shutting down power or any other failure of the S2000-ASR2, but on the other hand, sending pulses would not overload the polling loop of the S2000-KDL.

The **Counter Integral Action Time** parameter allows avoiding false-count pulses for different types of meters. The value of **Counter Integral Action Time** is set so that it was maximum two times less than duration of a countable pulse.

SEC.RU | Короткий путь к информации Скачано с sec.ru

Zone Type 15: Humidity Measurement

Zone Type #15 is used for monitoring the hydrometrical channel of an S2000-VT addressable combined temperature & humidity sensor. For this type of zone the S2000-KDL provides measuring humidity values while operating humidity control installations.

The S2000-KDL requests digital values of measured humidity through its polling loop when it is in the quiescent mode. The *Humidity Increased Threshold* and *Humidity Decreased Threshold* should be given for each zone of the Type #15.

Arm and Disarm commands cause respectively involving the zone into and its eliminating from operating of a humidity measurement and control system.

Available statuses of a zone of the Type #15 are the following:

DISARMED	Only troubles are monitored. Neither humidity is measured nor the zone affects humidity control
ARMING DELAY	Activating the zone is delayed until the Arming Delay time has elapsed
LEVEL LOW	The measured value of the humidity has dropped below the predetermined Humidity Decreased Threshold value
LEVEL HIGH	The measured value of the humidity has exceeded the predetermined Humidity Increased Threshold value
LEVEL NORM	The measured value of the humidity is within the range between the Humidity Decreased Threshold value and the Humidity Increased Threshold value
TROUBLE	The addressable device failed to measure temperature

The following configuration parameters are to be set for a zone of the Type #15 (see Table 1):

Humidity Increased Threshold: the value of relative humidity in % at the place of S2000-VT location which causes the Zone to enter Level High status

Humidity Decreased Threshold: the value of relative humidity in % at the place of S2000-VT location which causes the Zone to enter Level Low status

Arming Delay for a Humidity Measurement zone defines the time in seconds, after elapsing which since receiving an Arm command the controller will request measured humidity values for this zone

SEC.RU | Короткий путь к информации Скачано с sec.ru

DO NOT confuse the humidity increased / decreased thresholds defined for the Humidity Measurement zone and the same thresholds defined for addressable outputs of the S2000-KDL.

Humidity value's being out of the range programmed for a Humidity Measurement zone causes the S2000-KDL to switch the zone to the Level High / Level Low status and to transmit the relevant message to the network controller.

If, on the contrary, measured humidity values are out of the range programmed for an output assigned with this zone in the S2000-KDL configuration, the controller activates the output as defined by its predetermined executive program. The controller also transmits the changed output status to the network controller if the relevant switch in the output's settings allows that – see Section Configuration Parameters of Addressable Outputs.

Arming / Disarming

The S2000-KDL supports arming and disarming for all input addressable zones except zones #13 (Counting).

In case of *local control* Arm / Disarm commands are generated by the controller after user's presenting the proper authenticator (electronic key) on the reader connected to the S2000-KDL (see Section *Local Controlling Input Zones of the S2000-KDL* of this Manual). Otherwise, in case of *centralized control* Arm / Disarm commands are received from the network controller over the RS-485 interface. The S2000-KDL provides executing group commands for arming / disarming received from the network controller for those zones which have the Group Arming / Disarming switch set in the S2000-KDL configuration.

For **fire and intrusion protection zones (of Types #1 – #5, #7 – #9, and #11)** receiving an Arm command causes the controller to arm the zone. If before receiving the command the zone was in norm, it is armed, with the S2000-KDL sending the network controller via the RS-485 interface the message about arming the zone. In any other case the S2000-KDL considers the zone status to be Arming Failed and transmits this status to the network controller.

A zone of the **Type #8** is considered by the S2000-KDL to be in the Arming Failed status if the value measured by the smoke detector has exceeded the Prealarm or Fire sensitivity threshold predetermined for the zone for the current time of the day (Day or Night mode). If the value received from the addressable device is less than the thresholds said above then the zone enters Armed status, the S2000-KDL sending the relevant message.

If a zone of the **Type #9** for which the measured temperature has exceeded the predetermined Fire of Prealarm temperature is armed, it will be considered as being in Arming Failed status with transmitting the relevant message.

SEC.RU | Короткий путь к информации Скачано с sec.ru

If non-zero Arming Delay is programmed for **an intrusion protection zone**, the zone will be armed after expiring the specified time since receiving the Arm command. This time is for leaving the protected premises.

For **Auxiliary zones (zones of the Type #6)** receiving an Arm / Disarm command causes the controller to generate a message about the current zone status.

A zone of the **Type #10** having been armed is involved into a programmed temperature control mechanism.

If the value of temperature measured by the detector is out of the thresholds programmed for the zone, the controller generates a TEMPERATURE LOW or TEMPERATURE HIGH message. The temperature having returned to a normal range, the S2000-KDL generates a TEMPERATURE NORM message.

If the zone is related to a controller addressable output in the S2000-KDL configuration, then the temperature's being out of the *normal range programmed for this output* causes the output to be activated.

If a Disarm command is given for a zone of the Type #10, automatic analyzing the temperature received from the addressable detector is stopped but the temperature can however be measured by a remote request from the network controller or UProg software tool (see Section `*Requesting Parameters of Addressable* Devices of this Manual).

A zone of the **Type #15** having been armed is involved into a programmed humidity control mechanism.

If the humidity value measured by the detector is out of the thresholds programmed for the zone, the controller generates a LEVEL LOW or LEVEL HIGH message. The humidity having returned to a normal range, the S2000-KDL generates a LEVEL NORM message.

If the zone is related to a controller addressable output in the S2000-KDL configuration, then the humidity value's being out of the *normal range programmed for this output* causes the output to be activated.

If a Disarm command is given for a zone of the Type #15, automatic analyzing the humidity values received from the addressable detector is stopped but the humidity can however be measured by a remote request from the network controller or UProg software tool (see Section `*Requesting Parameters of Addressable* Devices of this Manual).

Arm / Disarm commands are ignored for zones of the **Type #13**.

SEC.RU | Короткий путь к информации Скачано с sec.ru

Detector's Operating within the Polling Loop

Upon breaking a zone of the **Type #4 or #5** which is armed (for example, upon receiving an intruder detector's response or tampering the detector enclosure) the S2000-KDL switches the zone to the **Intrusion Alarm** status. Also the relevant message is transmitted over the RS-485 interface.

Upon breaking a zone of the **Type #7** the Entrance Alarm message is output and the **Alarm Delay** starts to be counted. If the zone is not disarmed or armed within this time, it enters the **Intrusion Alarm** status.

Upon receiving alarm responses from a zone of the **Type #1, #2, or #3** (fire detection zones) the controller switches the zone to the **Fire Alarm** status and transmits the relevant message over the RS-485 interface.

For zones of the **Type #8**, in case when the value returned by the detector exceeds the Prealarm Sensitivity Threshold programmed for the current time of the day (for Day mode or Night mode), the S2000-KDL sends the network controller a **Fire Prealarm** message specifying the zone loop address and then switches the zone to the **Fire Prealarm** status. If the value returned by the detector exceeds the Fire Sensitivity Threshold (for the current time of the day) then the controller sends a **Fire Alarm** message specifying the loop address of the zone and switching the zone to the **Fire Alarm** status.

For zones of the **Type #9** the method of processing responses from addressable devices is similar to those mentioned above for zones of the Type #8 except that the values of sensitivity thresholds does not depend on time of the day.

A **Service Required** message with specifying the zone address is generated for zones of the Types #1 and #8 in such case if the contamination value returned by the addressable detectors exceeds the own threshold value of the detector (for zones of the Types #1 and #8) or the Contamination Threshold value programmed for the zone for at least two hours (for zones of the Type #8). Having received such message please clean the smoke chamber of the detector.

In case of a failure of the detector's sensor or its measuring channel a Trouble message is sent to the network controller over the RS-485 interface.

SEC.RU | Короткий путь к информации Скачано с sec.ru

OUTPUTS OF THE ADDRESSABLE POLLING LOOP

If a security installation controlled by the S2000-KDL is supposed to control addressable executive devices such as sirens, fire lights, guard lights, video cameras, electric locks or strikes, heaters, ventilators, etc. these devices are connected to the polling loop through addressable executive modules S2000-SP2. Also S2000-SP2 modules are used to send commands to release extinguishing agent or to transfer alarms to an Alarm Receiving Center.

Addressable zones matched with S2000-SP2 modules are configured as *addressable outputs* of the polling loop (see Section *Programming Addressable Outputs of the S2000-KDL* of this Manual). A relay module can occupy one or two addresses within the polling loop (depending on the current position of the S2000-SP2 DIP switches) controlling one or two connected executive devices respectively.

Moreover, addressable outputs of the polling loop can be related with virtual relay outputs of expansion modules for intrinsically safe loops, LEM-Ex rev.2.

Addressable outputs of the polling loop can be controlled either *locally* (as an effect caused by changing statuses of S2000-KDL input zones linked with these outputs) or *remotely* by central commands issued by the network controller through the RS-485 interface.

A special option of the S2000-KDL configuration enables transferring events about changing statuses of relay outputs to the network controller (the output can be switched on / off or being switched on / off alternately).

If an addressable output is to be controlled locally, it shall be assigned to en executive program and linked with those input zones of the S2000-KDL which status changes will run the program. Also an activation time and activation delay can be defined for this output (see Section *Programming Addressable Outputs of the S2000-KDL* of this Manual).

Local control of the addressable outputs of the polling loop is of higher priority than centralized remote control. That is, if there is a link between the output and an S2000-KDL input zone in the controller configuration, any remote control commands received over the RS-485 interface for this output will be ignored

SEC.RU | Короткий путь к информации Скачано с sec.ru

Configuration Parameters of Addressable Outputs

Table 3 shows the configuration parameters of the S2000-KDL which can be defined for an addressable output:

Table 3. Parameters of the Addressable Outputs

Parameter	Description	Range	Factory Value
Executive Program	Defines the tactics of controlling the addressable output as well as the initial relay on / off condition	0 ÷ 37 (Table 4 describes all the available programs)	0
Relay Activation Time*	Defines the time interval which the relay will be switched on / off for (if the assigned executive program implies time limitation)	0 s to 8192 s (2 h 16 min 32 s) in increments of 0.125 s	60 s
Activation Delay*	Defines the time interval to delay starting an executive program after realizing its condition; suitable for executive programs: #1 to #8, #11, #12, #17 to #35	0 s to 8192 s (2 h 16 min 32 s) in increments of 0.125 s	0
And / Or Logic	The algorithm for starting / stopping executive programs #**36** and #**37** if the output is linked with several input zones of Types **10** or **15**	0 (Or) / 1 (And)	0 (Or)
Temperature Increased Threshold	Given for programs #**36** and #**37**, this parameter defines the temperature value which cause relay **switching on** (#36) or **switching off** (#37)	– 55°C …+125°C	22
Temperature Decreased Threshold	Given for programs #**36** and #**37**, this parameter defines the temperature value which cause relay **switching off** (#36) or **switching on** (#37)	– 55°C …+125°C	20
Humidity Increased Threshold	Given for programs #**36** and #**37**, this parameter defines the humidity value which cause relay **switching on** (#36) or **switching off** (#37)	0%…100%	70
Humidity Decreased Threshold	Given for programs #**36** and #**37**, this parameter defines the humidity value which cause relay **switching off** (#36) or **switching on** (#37)	0%…100%	60
Notify on Changing Relay Statuses	Enables or disables generating Relay Status Changed messages	Yes / No	No

* *For the executive programs #**36** and #**37** the sense of this parameter will be described while discussing these programs, see below.*

SEC.RU | Короткий путь к информации Скачано с sec.ru

Local Executive Programs for Controlling Polling Loop Outputs

Table 4 represents all available control tactics (executive programs) which can be realized by the S2000-KDL in case of local controlling of relay outputs.

Table 4. Local Executive Programs for Outputs of the Polling Loop

No	Program Name	Description
0	Remote Control	Local control is disabled. The relay can be controlled remotely over the RS-485 interface by a network controller command
1	Switch On	If an assigned input zone has entered the Intrusion Alarm or Fire Alarm status, the relay is switched on. Otherwise the relay is off
2	Switch Off	If an assigned input zone has entered the Intrusion Alarm or Fire Alarm status, the relay is switched off. Otherwise the relay is on
3	Switch On For a Time	If an assigned input zone has entered the Intrusion Alarm or Fire Alarm status, the relay is switched on for a time given by the Relay Activation Time for this output. Otherwise the relay is off
4	Switch Off For a Time	If an assigned input zone has entered the Intrusion Alarm or Fire Alarm status, the relay is switched off for a time given by the Relay Activation Time for this output. Otherwise the relay is on
5	Blink From Off Condition	If an assigned input zone has entered the Intrusion Alarm or Fire Alarm status, the relay is switched on and off alternately. Otherwise the relay is off
6	Blink From On Condition	If an assigned input zone has entered the Intrusion Alarm or Fire Alarm status, the relay is switched on and off alternately. Otherwise the relay is on
7	Blink For a Time From Off Condition	If an assigned input zone has entered the Intrusion Alarm or Fire Alarm status, the relay is switched on and off alternately for a time given by the Relay Activation Time for this output. Otherwise the relay is off
8	Blink For a Time From On Condition	If an assigned input zone has entered the Intrusion Alarm or Fire Alarm status, the relay is switched on and off alternately for a time given by the Relay Activation Time for this output. Otherwise the relay is on

SEC.RU | Короткий путь к информации
Скачано с sec.ru

No	Program Name	Description
9	Lamp	If an assigned input zone has entered such status as Intrusion Alarm, Entrance Alarm, Fire Alarm, Fire Prealarm, Trouble, Disconnected, or Arming Failed, the relay is switched on and off alternately. If an assigned input zone is armed, the relay is switched on. If all zones are disarmed and being in norm, the relay is off.
10	Alarm Output 1	If all assigned zones are armed, the relay is switched on. Otherwise the relay is off
11	Discharge	If two or more assigned fire zones have entered Fire Alarm status and no assigned auxiliary zones are broken, the relay is switched on for a time given by the Relay Activation Time for this output
12	Siren	If an assigned zone has entered Fire Alarm or Fire Prealarm status, the relay is switched on and off alternately for a time given by the Relay Activation Time for this output. If an assigned zone has entered Intrusion Alarm status, the relay is switched on .for a time given by the Relay Activation Time for this output. Otherwise the relay is off
13	Fire Output	If an assigned zone has entered Fire Alarm status or Fire Prealarm status, the relay is switched on. Otherwise the relay is off
14	Trouble Output	If the is a zone being in the Trouble, Disconnected, Arming Failed, or Disarmed status, the relay is switched off. Otherwise the relay is on
15	Fire Lamp	If an assigned input zone has entered such status as Intrusion Alarm, Panic Alarm, Fire Alarm, Fire Prealarm, Trouble, Disconnected, or Arming Failed, the relay is switched on and off alternately. If all assigned zones are armed and being in norm, the relay is switched on. Otherwise the relay is off
16	Alarm Output 2	If all assigned input zones are armed or disarmed, the relay is switched on. Otherwise the relay is off
17	Switch On For a Time Before Arming	If an assigned input zone is being armed, the relay is switched on for a time given by the Relay Activation Time for this output. Otherwise the relay is off
18	Switch Off For a Time Before Arming	If an assigned input zone is being armed, the relay is switched off for a time given by the Relay Activation Time for this output. Otherwise the relay is on

SEC.RU | Короткий путь к информации Скачано с sec.ru

No	Program Name	Description
19	Switch On For a Time Upon Arming	If an assigned input zone has just been armed, the relay is switched on for a time given by the Relay Activation Time for this output. Otherwise the relay is off
20	Switch Off For a Time Upon Arming	If an assigned input zone has just been armed, the relay is switched off for a time given by the Relay Activation Time for this output. Otherwise the relay is on
21	Switch On For a Time Upon Disarming	If an assigned input zone has just been disarmed, the relay is switched on for a time given by the Relay Activation Time for this output. Otherwise the relay is off
22	Switch Off For a Time Upon Disarming	If an assigned input zone has just been disarmed, the relay is switched off for a time given by the Relay Activation Time for this output. Otherwise the relay is on
23	Switch On For a Time When Arming Failed	If arming one of assigned zones has failed, the relay is switched on for a time given by the Relay Activation Time for this output. Otherwise the relay is off
24	Switch Off For a Time When Arming Failed	If arming one of assigned zones has failed, the relay is switched off for a time given by the Relay Activation Time for this output. Otherwise the relay is on
25	Switch On For a Time Upon Auxiliary Zone Breaking	If one of the assigned auxiliary zones is broken, the relay is switched on for a time given by the Relay Activation Time for this output. Otherwise the relay is off
26	Switch Off For a Time Upon Auxiliary Zone Breaking	If one of the assigned auxiliary zones is broken, the relay is switched off for a time given by the Relay Activation Time for this output. Otherwise the relay is on
27	Switch On Upon Disarming	If an assigned input zone is disarmed, the relay is switched on; Otherwise the relay is off
28	Switch Off Upon Disarming	If an assigned input zone is disarmed, the relay is switched off; Otherwise the relay is on
29	Switch On Upon Arming	If an assigned input zone is armed, the relay is switched on; Otherwise the relay is off
30	Switch Off Upon Arming	If an assigned input zone is armed, the relay is switched off; Otherwise the relay is on

SEC.RU | Короткий путь к информации
Скачано с sec.ru

No	Program Name	Description
31	Switch On Upon Auxiliary Zone Breaking	If an assigned addressable zone has entered Auxiliary Zone Alarm status, the relay is switched on; Otherwise the relay is off
32	Switch Off Upon Auxiliary Zone Breaking	If an assigned addressable zone has entered Auxiliary Zone Alarm, status, the relay is switched off; Otherwise the relay is on
33	Discharge-1	If an assigned fire zone has entered Fire Alarm status and no assigned auxiliary zones are broken, the relay is switched on for a time given by the Relay Activation Time for this output
34	Discharge-A	If two or more assigned fire zones have entered Fire Alarm status and no assigned auxiliary zones are broken, the relay is switched on for a time given by the Relay Activation Time for this output
35	Discharge-1A	If an assigned fire zone has entered Fire Alarm status and no assigned auxiliary zones are broken, the relay is switched on for a time given by the Relay Activation Time for this output
36	Switch On If Measured Value Increased	If the value measured at one of the assigned zones has exceeded the value given by the relevant Temperature / Humidity Increased Threshold, the relay is switched on. If the value measured at one of the assigned zones has dropped below the value given by the relevant Temperature / Humidity Decreased Threshold, the relay is switched off.
37	Switch On If Measured Value Decreased	If the value measured at one of the assigned zones has dropped below the value given by the relevant Temperature / Humidity Decreased Threshold, the relay is switched on. If the value measured at one of the assigned zones has exceeded the value given by the relevant Temperature / Humidity Increased Threshold, the relay is switched off.

Executive Program 0

means that controlling the output in accordance with local cause & effect links (depending on statuses of local input zones of the S2000-KDL) IS DISABLED. The output can be managed remotely by network controlled commands received over the RS-485 interface. *The initial status* of the output for the program #0 is *Off* (Open).

Executive Programs 1…8

are to be used to control fire sirens, light alarms, and various executive devices which should be turned on upon entering one of the zones assigned to the output to Fire Alarm or Intrusion Alarm status.

The initial status for the programs #1, #3, #5, #7 is Off (Open) while the initial status for the programs #2, #4, #6, #8 is On (Closed).

SEC.RU | Короткий путь к информации Скачано с sec.ru

When a zone linked with the programmed relay enters a Fire Alarm or Intrusion Alarm status the output is activated accordingly to assigned executive program. On disarming or arming the zone being broken all outputs linked with the zone return to their initial statuses. Moreover, outputs operated by programs #3, #4, #7, and #8 return to their initial statuses on elapsing the time equal to Relay Activation Time for each these outputs. The relay can also be switched to an initial status by a Reset Alarm command sent over the RS-485 interface from S2000(M) console or Orion PC.

If relay outputs are controlled centrally by network controller commands, the initial statuses of outputs are defined by initial statuses of assigned executive programs.

Executive Program 9: Lamp

The executive program #9 (Lamp) is to be used when the relay is supposed to control a light alarm. *The status On (Closed) means that the contacts of the relay outputs are closed*.

Executive Program 15: Fire Lamp

The difference between programs Lamp and Fire Lamp is that the output is turned on only if all zones assigned to this output are armed.

Executive Program 10: Alarm Output 1

The program is suitable when the relevant output is used to transmit intrusion alarms to an Alarm Receiving Center. Alarms are output on relay contacts (relay contacts are open) just after occurring alarms of any types. Alarms are reset from the relay only after arming all the linked zones.

Executive Program 11: Discharge

Executive Program 33: Discharge-1

Executive Program 34: Discharge-A

Executive Program 35: Discharge-1A

Programs of the *Discharge* family are used to generate a command to release extinguishing agent in case of a fire.

Usually, a fixed fire extinguishing system can be started only after receiving responses from detectors in two independent fire protection zones.

Also, to prevent spreading of an extinguishing agent (gas or powder) outside the premises, a fixed fire extinguishing system can be started only if all doors to the room are closed. To monitor door positions, *zones of Auxiliary type (zones of the Type #6)* are used. When such a zone is broken (the door is open) it enters the Auxiliary Zone Alarm status, while upon restoring the normal status (the door has been closed) the auxiliary zone automati-

SEC.RU | Короткий путь к информации Скачано с sec.ru

cally recovers its status after elapsing the time defined by the Recovery Time parameter of the Auxiliary zone (see Section *Zone's Configuration Parameters* of this Manual).

To realize discharge tactics said above you should organize two or more fire protection zones for each closed premises to monitor fire situation as well as one or more Auxiliary zones to monitor door conditions. These zones are linked with an addressable output assigned to the Discharge program. After receiving fire alarms from one or more fire zones the S2000-KDL turns the relay output on for a time if all the doors are closed. If a door is open the relay output will not be turned on until all the doors will be closed.

The program #**33** ("Discharge-1") is similar to the program #**11** ("Discharge") but it is executed just after receiving a fire alarm from a single linked zone.

The programs #**34** ("Discharge-A") and #**35** ("Discharge-1A") are similar to programs #**11** ("Discharge") and #**33** ("Discharge-1"). The difference is that if one (for #35) or two (for #34) assigned zones has responded with fire alarms and the output has been turned on, then the relay output turned off by breaking the auxiliary zone (zones) **will not be turned on again** upon recovering these ones.

Executive Program 12: Siren

The program #12 is to be used when the output relay is supposed to control an external sound alarm.

Executive Program 13: Fire Output

The program #13 is used when the output relay is supposed to transfer fire alarms to a fire brigade or central monitoring station.

Executive Program 14: Trouble Output

The program #14 is used to monitor fire protection zones for proper operability. The relay output assigned to this program is open in case of a trouble of linked fire zones (such as a short circuit failure, open circuit failure, or addressable device failure) as well in case of lost communication between the S2000-KDL and monitored zones (that is, relevant addressable devices brought into the polling loop). Also the output is open upon disarming and failing to arm the linked zones because fire protection zones have to be armed round the clock.

Executive Program 18: Switch Off For a Time Before Arming

Executive Program 19: Switch Off For a Time Upon Arming

The programs #18 and #19 allow automatic resetting of power of four-wire smoke detectors or fire detectors connected via specials relay bases to addressable interface modules upon detectors' response. Using the program #18, assign the linked zone (zones) to an Arming Delay (see Section *Zone's Configuration Parameters*) which is 2 s more than the Relay Activation Time programmed for the output.

SEC.RU | Короткий путь к информации Скачано с sec.ru

Executive Program 36: Switch On If Measured Value Increased

Executive Program 37: Switch On If Measured Value Decreased

Executive programs #36 (Switch On If Measured Value Increased) and #37 (Switch On If Measured Value Decreased) are to be used in automatic control systems to control various physical quantities such as temperature or humidity. To develop such a system, each addressable output of the responsible for turning on / off executive equipment is to be linked with one or more local zones of the Types **#10** or **#15** which sensors measuring relevant physical quantity is connected to. Also for each the output threshold values of measured value shall be specified: a Temperature / Humidity Increased Threshold and Temperature / Humidity Decreased Threshold.

For the executive program **#36** an assigned output is activated when the value of physical quantity measured at the zone linked with the output exceeds programmed **Temperature / Humidity Increased Threshold**, the output being turned off when the measured value drops below **Temperature / Humidity Decreased Threshold**.

For the executive program **#37**, on the contrary, the output is activated when the measured value drops below **Temperature / Humidity Decreased Threshold**, the output being off when the measured value exceeds **Temperature / Humidity Increased Threshold**.

The outputs of the S2000-KDL controlled in accordance with the programs **#36** and **#37** cab be turned on either in *continuous* or in *pulse* mode. The actual mode of executing programs is regulated by the value of **Activation Delay** programmed for the outputs which has a special meaning for the programs #36 and #37.

If the Activation Delay parameter is set to 0, the output will be switched on for unlimited time (as long as the condition for its activation is true) without regard to the given value of the Relay Activation Time parameter.

If the Activation Delay parameter is not equal to 0, the output will be switched on periodically for a time given by Relay Activation Time with pauses between turnings on equal to programmed Activation Delay.

If an addressable output of the S2000-KDL is assigned to *several* zones of the Types **#10** or **#15**, it is necessary to define whether the output will be switched on when the control condition is true *at least* for one linked zone or the output will be switched on when *values measured in all zones* linked to the output must be out of a permissible range. For doing so, And /Or Logic parameter must be set to the relevant value for the output.

SEC.RU | Короткий путь к информации Скачано с sec.ru

DO NOT confuse the Temperature Increased / Decreased thresholds defined for an S2000-KDL output and similar-named thresholds programmed for Thermostatic or Humidity Measurement zones (see Section Zone's Configuration Parameters).

Returned temperature or humidity value's being out of the range programmed for a Thermostatic or Humidity Measurement zone causes the S2000-KDL to switch the zone to the Temperature / Level High / Low status and to transmit the relevant message to the network controller.

If, on the contrary, measured temperature or humidity values are out of the range programmed for an output assigned with this zone in the S2000-KDL configuration, the controller activates the output as defined by its predetermined executive program. The controller also transmits the changed output status to the network controller if the relevant switch in the output's settings allows that – see Section Configuration Parameters of Addressable Outputs.

SEC.RU | Короткий путь к информации Скачано с sec.ru

CONTROLLING S2000-KDL INPUT ZONES AND USER AUTHORIZATION

Local controlling input addressable zones of the controller – such as requesting zone statuses, arming zones, disarming zones – is only available for authorized users which have presented their authenticators or electronic keys. To read electronic keys which can be Dallas iButton access devices, Proximity cards, or digital PIN codes entered by keypads, a reader with output interface Touch Memory or Wiegand is connected to the S2000-KDL.

Authenticators used for local control must be enrolled in the controller memory. Apart from the electronic code, the S2000-KDL stores two parameters for each registered electronic key which are an access group and a Disabled flag. The access group of an electronic key (more exactly, the local access group of the electronic key for this controller) defines which addressable zones of the S2000-KDL a user presented the key can control to. The Disabled flag is set on for a key in the case if zone control is temporarily prohibited for the key (for example, if the key is lost).

Authenticators presented by users can be registered not in the memory of the S2000-KDL but in the memory of the network controller under which the S2000-KDL operates (either S2000/S2000M console or Orion Pro software). In such case presenting the authenticator to the reader of the S2000-KDL is considered as a request for *remote centralized controlling* partitions or individual devices of the Orion system (see Manual for the network controller being in use) or for authorized access control (only for systems operated by the Orion Pro software).

The reading device connected to the controller, in addition to verifying users, also performs light and sound indication of reacting the system to operations requested by users (see Section *Light and Sound Indication of the Reader* of this Manual).

Configuration Parameters of Readers and User Authenticators

Table 5 shows configuration parameters of the S2000-KDL which shall be adjusted accordingly to the type of the reader connected to the controller as well as the parameters of user rights to control input zones of the S2000-KDL.

Table 5. Parameters of Readers and User Authenticators (Keys)

Parameter	Description	Range	Factory Value
Reader's Output Interface	Defines the way to transfer the read code of the presented user key to the controller	1 Touch Memory; 2 Wiegand	1
LED Control Polarity	Provides selecting the active logic level to turn the LED of the reader on	Forward (1 active) or Reverse (0 active)	Forward (1 active)

SEC.RU | Короткий путь к информации Скачано с sec.ru

Parameter	Description	Range	Factory Value
Number of Reader LEDs	-	1 / 2	1
Sounder Control Polarity	Provides selecting the active logic level to turn the sounder of the reader on	Forward (1 active) or Reverse (0 active)	Forward (1 active)
Sounding Enabled	Enables and disables sounding for the reader	On / Off	On
Maximum PIN Code Length	Gives the maximum number of digits in a PIN code for readers with Wiegand output interface transferred the controller digits of PIN codes one-by-one	1 – 12	6
Disabled	Allows temporary locking for the key	On / Off	Off
Access Group	Defines control / access rights for the key	0 – 128	0

Local Controlling Input Zones of the S2000-KDL

If an electronic key presented to the reader of the S2000-KDL is registered in the controller memory, the controller operates the key in the mode of local control.

If the key is locked in the S2000-KDL configuration, the controller generates an Access Denied message indicating the event (see Section *Light and Sound Indication of the Reader*) and transferring the message over the RS-485 interface.

If the Disabled key attribute is set off, after presenting the electronic key the LED and sounder of the reader will indicate an integrated status of the zones assigned to this key by its access group (see Section *Light and Sound Indication of the Reader* of this Manual). The S2000-KDL generates and transfers the network controller a User's Code Entered message. After that, second presenting of the electronic key is expected for some time.

Second presenting of the electronic key is performed to arm (or disarm, depending on the current zone status) all the zones assigned to this key. If the zone status is not Disarmed, presenting the electronic key will cause trying to disarm the zone. Otherwise, the controller will give a command to arm the zone.

For 2 s since second presenting the electronic key the reader is indicating a new status of zones. If the electronic key is presented again to the reader for this 20 s, zones' status will be changed in accordance with the algorithm described before, and a time interval of 20 s will be being counted once more. On expiration of this time the reader exits the mode of reading electronic keys, its LED and sounder being off.

SEC.RU | Короткий путь к информации Скачано с sec.ru

Centralized Control in the Orion System

If an electronic key presented on the S2000-KDL reader is not registered in the S2000-KDL memory, the controller operates the key in the mode of centralized control.

If the communications between the S2000-KDL and the network controller over the RS-485 interface is lost at the time the controller generates and puts in its buffer a message about rejecting access indicating the event by reader's LED and sounder (see Section *Light and Sound Indication of the Reader* of this Manual).

If the S2000-KDL communicates with the network controller normally, it transfers the network controller the request for rights of this key to control partitions and all further operations follow the rules described in the Manual for the network controller being in use.

The results of all operations requested by user are displayed by light and sound indication of the reader (see Section *Light and Sound Indication of the Reader* of this Manual).

Compatibility of Readers Used in Orion Systems

If an Orion system uses a number of S2000-KDL controllers connected with readers with different types of output interface (Touch Memory, Wiegand-26, Wiegand-44, etc) intended for reading electronic identifiers of the same type, then the code of an identifier read by one reader can differ from the code of the same identified read by another reader.

For example, the code of a Proximity card accepted by a reader with Wiegand-26 interface can differ from the code of the same card accepted on a reader with Wiegand-44 or Touch Memory interface. Or a PIN code entered from a keypad with Wiegand-6 or Wiegand-8 interface (where each typed character is sent to the controller individually) will differ from the same code entered from a keypad with Wiegand-26 or Touch Memory interface (where all digits of the PIN code are sent to the controller in one parcel).

While developing and exploiting controllers within a large networked system please follow the recommendations below.

1. Registering codes of electronic keys remotely, when the code is read by a reader connected to another controller, the data format used by that reader shall match the data format of the reader connected to the programmed controller.
2. If readers with different data formats are used in the system, then, adding personal to the Orion database enroll their codes in all available formats (that is, assign a user to so many descriptors which the number of used incompatible data format is).

SEC.RU | Короткий путь к информации Скачано с sec.ru

LIGHT AND SOUND INDICATION

S2000-KDL Light Alarms

The S2000-KDL provides indication of its conditions by means of three two-color LEDs located on its faceplate:

- READY LED indicates power conditions of the controller
- RS-485 LED displays communication conditions between the S2000-KDL and the network controller (if applicably) over the RS-485 interface
- LOOP LED indicates conditions of the polling loop and communication between the controller and its addressable devices as well as displays processes in the polling loop such polling the addressable devices and programming their loop addresses

The method of LED indication depends on current setting of the controller's configuration option EN 54 Indication. If the option is on the indication algorithm fulfills the European standards EN 54-2 while, otherwise, this one is set off the S2000-KDL implements its own indication algorithm.

In addition, condition indication also depends on current settings of the configuration option Power Input Monitoring and Ring Topology – see below.

Table 6, Table 7, and Table 8 describe indication of the controller during operating. In state of running a self-diagnostic procedure (see Section *Preventive Maintenance*), indicators READY, RS-485, and LOOP shall flash with long pauses one-by-one.

Table 6. READY LED Behavior

Conditions of S2000-KDL Power Inputs in state of		**LED Behavior**
***Both Power Inputs Monitoring* being on**	***Both Power Inputs Monitoring* being off**	
The power supply voltage at both input terminals +U1 **and** +U2 is above 9.8 V	The power supply voltage at the input terminal +U1 **or** +U2 is above 9.8 V	Lit steady in green
The power supply voltage at the input terminal +U1 **or** +U2 is below 9.3 V	The power supply voltage at both input terminals +U1 **and** +U2 is below 9.3 V	Flashes in yellow twice per second

Both Power Inputs Monitoring is turned on just on turning on EN 54 Indication

SEC.RU | Короткий путь к информации Скачано с sec.ru

Table 7. RS-485 LED Behavior

Communication conditions at the RS-485 port	EN 54 Indication Is Off	EN 54 Indication Is On
Regular communications at the RS-485 port	Lit steady in green	Off
No communications at the RS-485 port	Flashes with green twice per second	Flashes with yellow twice per second

Table 8. LOOP LED Behavior

Polling Loop Condition	EN 54 Indication Is Off	EN 54 Indication Is On
No connection with addressable devices	Off	Lit in yellow with short pauses once per second
Stable communication with all physically connected devices	Lit steady in green	Off
No communication with addressable devices programmed in the S2000-KDL configuration One or more addressable devices are in Error Response or Unstable Communication status	Lit steady with yellow	Lit steady with yellow
A short circuit failure or other trouble in the loop	Flashes in yellow twice per second	Flashes in yellow twice per second
Polling all zones after starting powered the controller	Flashes in green four times per second	Flashes in yellow four times per second
Programming a loop address for the device with non-volatile memory	Double flashes with green with a long pauses	Double flashes with yellow with a long pauses
The **Ring Topology** option is set on and communications at PL1 or PL2 is lost	Lit steady with green with flashing in yellow once per second	Flashes in yellow once per second

SEC.RU | Короткий путь к информации
Скачано с sec.ru

Light Indication of Addressable Devices

Addressable devices operated under S2000-KDL control perform their light indication according to *own predetermined* algorithms which are described in documentation of these devices. However, for the addressable devices which support the communication protocol DPLS_v2.xx, the S2000-KDL provides two additional indication options, namely *Indication Disabled* and *Controlled by the S2000-KDL*.

The current mode of indication of addressable devices supporting DPLS_v2.xx is defined by the Device Indication Control parameter programmed for the polling loop zone the addressable device is assigned to (see Section *Input Zones of the Polling Loop* of this Manual).

In the Controlled by the S2000-KDL mode the behavior of addressable device LEDs are defined by the status of the zone assigned to the addressable device as shown in Table 9. The tactics of LED lighting depending on zone statuses upon is shown as a *blink mask* which is repeated with a period of 4 s. Each position in a blink mask corresponds to 0.5 s. A filled circle corresponds to indicator lighting during half a second while an empty circle means that the LED is off for half a second.

Table 9. Indication of Addressable Devices Under Control of the S2000-KDL

Zone Status	Description	Blink Mask
Norm	For all types of zones	●○○○○○○○
Intrusion Alarm	For zones of the **Types #4**, **#5**, **#7**, and **#11**	●●○○○○○○
Fire Prealarm	For the Fire Prealarm mode	●●●○○○○○
Fire Alarm	For zones of the Types **#2** and zones of DIP-34A connection of **#1** and **#8** types	●●○○○○○○
	For zones of the Types **#1**, **#3**, **#8**, and **#9** excluding zones of DIP-34A connection	Lit steady
Trouble1	Measuring channel has failed	●●●●●●●●
Trouble2	Open or short circuit failure	●○○●●○○○
Contaminated	High contamination level for zones of the Types **#1** and #**8**	●○○●●●○○
Parameter Error	Error of zone parameters	●○○○●○○○
Arming Failed	Arming the zone failed	●●○○●●○○

SEC.RU | Короткий путь к информации Скачано с sec.ru

Light and Sound Indication of the Reader

If a proper reader is connected to the S2000-KDL then the reader's LED (LEDs) and sounder (if enabled) display the dialog between users and the S2000-KDL or network controller while users request access to various system operations (see Section *Controlling S2000-KDL Input Zones and* of this Manual).

Table 10 represents events and system conditions that can be indicated by the reader LED (LEDs) depending on how many LED control outputs of the reader (one or two) are used by the controller (that is, given by the *Number of Reader LEDs* parameter, see Section *Configuration Parameters of Readers and User Authenticators* of this Manual).

Table 11 represents events and system conditions that the S2000-KDL can output on the reader sounder (if only Sounding Enabled parameter is set on, see Section *Configuration Parameters of Readers and User Authenticators* of this Manual).

Table 10. Reader Light Indication

Event (Condition)	Two Control Outputs	Single Control Output
The presented electronic key (authenticator) is not found in the S2000-KDL memory; the controller is waiting for a decision of the network controller	Lights in red and green alternately five times per second	Flashes five times per second
Access is closed (prohibited) or access is denied	Lights in red for a second	Lights for a second
Access is granted	Lit steady in green	Lit steady
Zones or Partitions Are Armed	Lit steady in red	Lit steady
Zones or partitions are disarmed	Lit steady in green	Off
Troubles in the zone (partition)	Flashes with green once per second	Flashes once per second
Intrusion Alarm, Fire alarm, Fire Prealarm, Arming Failed in the zone (partition)	Flashes with red twice per second	Flashes twice per second
Entering the mode of arming / disarming	Flashes with green once per second	Flashes once per second

SEC.RU | Короткий путь к информации Скачано с sec.ru

Table 11. Reader Sound Indication

Event or Condition	Sound Signaling
The presented electronic key (authenticator) is not found in the S2000-KDL memory; the controller is waiting for a decision of the network controller	A beep
Access is closed (prohibited) or access is denied	A signal of duration 1 s
Access is granted	Two short beeps
Zones or partitions are armed	Two short beeps
Zones or partitions are disarmed	Two short beeps
Trouble in the zone (partition)	Beeps once per second
Intrusion Alarm in the zone (partition)	Beeps five times per second
Fire Alarm or Prealarm in the zone (partition)	Long signals with short pauses once per second
Arming the zone (partition) failed	Beeps twice per second

SEC.RU | Короткий путь к информации Скачано с sec.ru

COMMUNICATIONS BETWEEN THE S2000-KDL AND THE NETWORK CONTROLLER

The S2000-KDL can operate both standalone and as a part of an Orion security system under the system network controller.

Being used in a small fire & intruder alarm system, the S2000-KDL can operate standalone controlling polling loop outputs automatically in accordance with the pre-programmed logic depending on statuses of the input addressable zones which are assigned to these outputs.

However, the S2000-KDL maximizes its operability while working as part of an Orion security system under a network controller which can be an S2000/S2000M fire and alarm console or a PC with Orion Pro software installed.

Operating under the network controller, the S2000-KDL transmits over the RS-485 interface bus entire information about monitored events such as current statuses of addressable devices, arming / disarming attempts, troubles of addressable devices, relay outputs, the polling loop, the device itself, etc. All these data can be output to be observed by a system operator or a security administrator, or written into a log for further analysis or reporting, or to be output to external indicator modules, or to be used within complicated automatic system management scenarios. This information can also be transmitted out of the system to a fire brigade or a central monitoring station over a phone line, a GSM channel, or Internet.

When the S2000-KDL operates as a part of an Orion system it allows controlling its outputs centrally, arming / disarming its zones centrally, resetting its alarms remotely as well as requesting current zone parameters remotely (see below).

In order to identify the S2000-KDL within an Orion system, a unique network address ranged from 1 to 127 must be assigned to it while programming. From this address the controller will send the network controller messages and receive centralized commands from it over the RS-485. The network address can be assigned to the S2000-KDL by means of network controller tools or using the UProg.exe configuration tool – see Section *Network Settings of the S2000-KDL*.

In systems with complicated network topology, for example, when Orion system data are to be transferred via local networks or fiber optic or radio relay channel, there can be some communication delay occurring. In such case, to provide correct communications between the S2000-KDL and the network controller it can be necessary to increase the value of the Response Pause parameter of the controller (see Section *Network Settings of the S2000-KDL*).

Transferring Alarms and Status Messages to a Network Controller

Being connected to a network controller (either an S2000/S2000M control console or the Orion Pro software) the S2000-KDL automatically transfers messages about its status and happened events (including status changes of the polling loop and its inputs and outputs) over the RS-485 interface.

SEC.RU | Короткий путь к информации Скачано с sec.ru

If a PC operates as the network controller, it communicates data with the local RS-485 network through one of such interface converters as PI-GR, S2000-PI, USB-RS485, or S2000-USB.

If a communication loss has occurred during generating a message, the relevant event is stored in the non-volatile memory of the S2000-KDL. When the communication is restored, the event will be transmitted via the RS-485 interface to the network controller with the time and date assigned in accordance with the internal clock of the S2000-KDL.

The network controller synchronizes the internal clock of the S2000-KDL to its own clock by sending a *Synchronize Clock* command transferred via the RS-485 interface (commonly, at the beginning of each hour).

The S2000-KDL provides buffering up to 255 events in its non-volatile memory.

The S2000-KDL transmits the network controller the following events specifying the time and date of their origin:

DISARMED	The addressable zone is disarmed
ARM DELAY	A predetermined delay is being counted before arming the zone
ARMED	The addressable zone is armed
ARM FAILED	Trying to arm the zone has failed due to zone's not being in norm
LOOP TRBL OPEN	The circuit which connects the addressable device into the polling loop of the S2000-KDL has been open
LOOP TRBL SHORT	A short failure has been detected in the circuit which connects the addressable device into the polling loop of the S2000-KDL
DISCONNECTED	Communications between S2000-KDL and the addressable device has been lost
CONNECTED	Communications between S2000-KDL and the addressable device has been restored
FIRE PREALARM	The addressable fire detector has sent a signal which can indicate a fire in the area assigned with this addressable zone
FIRE ALARM	A fire has been detected in the fire protection zone
INTRUSION ALARM	An intrusion has been detected in the intrusion protection zone
ENTRY ALARM	An entry has been detected in the entrance zone
SILENT ALARM	An alarm has been received from the panic zone
TAMPER ALARM	The controller's or detector's closure has just been open
TAMPER RESTORE	The controller's or detector's closure has just been closed

SEC.RU | Короткий путь к информации Скачано с sec.ru

ZONE CONFIG ERR	A configuration conflict has been detected for the zone: either the type of the connected device doesn't match to the device type which was specified while configuring the controller or the specified zone type (tactics of monitoring) doesn't match to the specified device type
SERVICE REQUIRED	The zone requires some service (for example, the smoke chamber of the DIP-34A is contaminated)
FIRE TROUBLE	A trouble of the addressable device. This message is obsolete and can be corrected in further versions of network controllers
FIRE TEST	The detector response was caused by a testing action such as impact of a magnet or laser pointer. The text of this message is obsolete and is to be corrected for next versions of network controllers
FIRE TEST BEGIN	The polling loop is switched to the Detector Test Mode – see section *Remote Controlling the S2000-KDL over the RS-485* of this Manual. The text of this message is obsolete and is to be corrected for next versions of network controllers
FIRE TEST END	The polling loop exits the Detector Test Mode – see section *Remote Controlling the S2000-KDL over the RS-485* of this Manual. The text of this message is obsolete and is to be corrected for next versions of network controllers
NOT READY TO ARM	The zone is disarmed, but cannot be armed due to detector's being activated
READY TO ARM	The zone is disarmed and ready for arming
AUX ZONE ALARM	The auxiliary zone has been broken
AUX ZONE RESTORE	The auxiliary zone has been restored
TEMPERATURE HIGH	The temperature in the thermostatic zone has exceeded a specified upper threshold
TEMPERATURE NORM	The temperature in the thermostatic zone has been in a normal range
TEMPERATURE LOW	The temperature in the thermostatic zone has dropped below a specified lower threshold
LEVEL HIGH	The humidity value in the humidity measurement zone has exceeded a specified upper threshold
LEVEL NORM	The humidity value in the humidity measurement zone is in a specified normal range
LEVEL LOW	The humidity value in the humidity measurement zone has dropped below a predetermined lower limit
RELAY DISCONNECT	Communications between the S2000-KDL and the addressable relay module has been lost

SEC.RU | Короткий путь к информации Скачано с sec.ru

RELAY CONNECTED	Communications between the S2000-KDL and the addressable relay module has been restored
RELAY ON RELAY SWITCHES RELAY OFF	Not supported yet
USER'S CODE ENTR	A user has presented an electronic key to the reader of the S2000-KDL
ACCESS DENIED	A user has presented a registered electronic key which, however, is being disabled at the moment
ILLEGAL CODE	A user has presented an electronic key which is not enrolled in the memory of the network controller. Or, in case of loss of communications between the network controller and the S2000-KDL, a user has presented an electronic key which is not enrolled in the memory of the S2000-KDL.
ERR IN RESPONSE	An error has been found in the addressable device's response
COMM UNSTABLE	Unstable communications between the addressable device and the S2000-KDL
2WIRE 1 LOST	Communications between the addressable device and the PL1 terminals of the controller has been lost*. This message is not supported yet
2WIRE 2 LOST	Communications between the addressable device and the PL2 terminals of the controller has been lost*. This message is not supported yet
2WIRE 1 RST	Communications between the addressable device and the PL1 terminals of the controller has been restored*. This message is not supported yet
2WIRE 2 RST	Communications between the addressable device and the PL2 terminals of the controller has been restored*. This message is not supported yet
2WIRE LINE SHORT	A short circuit failure has happened in the polling loop or one of its branches
2WIRE LINE TRBL	Failure to supply the required power to the polling loop or one of its branches. Actually, this message appears when the voltage in the polling loop (its branch) exceeds the output voltage of the S2000-KDL
2WIRE LINE RST	The polling loop operates correctly
DEVICE RESTART	The power of the S2000-KDL was turned off and then turned on again
POWER FAILED	The power voltage at the inputs +U1 and / or +U2** has dropped below 9.3 V

SEC.RU | Короткий путь к информации Скачано с sec.ru

POWER RESTORE	The power voltage at the inputs +U1 and / or +U2** has exceeded 9.8 V

* *Are generated in a case if the Ring Topology switch is set on – see Section "Setting Operating Parameters of* the S2000-KDL*" of this Manual*

** *Depending on the number of connected power supplies and the current setting of the Both Power Inputs Monitoring parameter – see Section Setting Operating Parameters of the S2000-KDL of this Manual*

Remote Controlling the S2000-KDL over the RS-485 Interface

The S2000-KDL provides execution of the following commands received over the RS-485 interface from the relevant S2000/C2000M console or management software of the Orion system (the Orion Pro software or the UProg configuration tool):

- Load Configuration into S2000-KDL
- Assign the Network Address
- Arm / Disarm a zone (or a group of zones)
- Reset Alarms
- Request Protocol (Return statuses of all the zones)
- Synchronize the Internal Clocks
- Local Programming
- Mode Control
- Switch to the Detector Test Mode
- Turn the Output On / Off
- Request Zone Settings

Most of these commands are sent by means of the network controller and detailed in its Manual.

The S2000-KDL is configured by the UProg utility. The UProg provides assigning the controller to a network address, requesting current zone parameters as well as remote programming addressable devices connected to the S2000-KDL (for example, assigning loop addresses to the addressable devices which store them in their non-volatile memories) – see Sections *Network Settings of the S2000-KDL*, *Programming Loop Addresses of Addressable Devices*, and `*Requesting Parameters of Addressable* Devices of this Manual relatively.

A *Switch to the Detector Test Mode* command sent by tools of the network controller provides regulating testing addressable devices brought into the polling loop according to the following algorithms:

SEC.RU | Короткий путь к информации Скачано с sec.ru

a) Testing smoke detectors in the Fire Alarm mode

While a test action is applied to a DIP-34A supporting DPLS_2.xx (a magnet is put to a detector, the test button is pushed, or laser tester operates) and the detector is switched to *a special test mode*, the S2000-KDL generates a FIRE ALARM message for the zone. If the said test mode is disabled, the same actions (excluding the impact of smoke or aerosol) will lead to generating a FIRE TEST message which doesn't result in starting executive modules of the system.

b) Checking for operating and verifying ranges of intrusion detectors

As a rule, indication of intrusion detectors operating in quiescent mode is suppressed to prevent an attacker from finding out detector range. If the detectors are to be checked for their operability and their responsibility to external conditions, they can be temporary switched to the test mode. To do this, you should disarm the relevant zones and give the command Switch to the Detector Test Mode which results in the detectors' indicating by their own built-in algorithms as described in their manuals. If the zone is broken the FIRE TEST message will be generated. Test mode is applicable to all types of intrusion protection zones.

The Detector Test mode is turned on for a time specified by the user which gives the command. The maximum time for testing detectors' operability is 2.2 hours.

To perform test mode correctly, equipment shall be activated (for example, the relevant jumper on the detector PCB shall be set on or the tamper switch shall be pressed by a special; way – see the Manual for the detector being in use.)

To control indication of conventional detectors from third vendors, we recommend to interface them to the polling loop via addressable input modules S2000-AR1 rev.04.

SEC.RU | Короткий путь к информации Скачано с sec.ru

SEC.RU | Короткий путь к информации
Скачано с sec.ru

INSTALLATION

SEC.RU | Короткий путь к информации Скачано с sec.ru

STANDARD DELIVERY

Find the following unpacking the S2000-KDL:

- S2000-KDL controller
- CD disk with this User's Manual
- DIN 7982 Flat Head Tapping Screw with Cross Drive 2.2x6.5
- Three Wood Screws
- Three Wall Plugs

SAFETY PRECAUTIONS

There are no potential hazard circuits within the controller

Do SHUT OFF the controller power before mounting, wiring, or maintaining the S2000-KDL

Mounting and maintenance the controller must be implemented by qualified engineers

S2000-KDL MOUNTING

The controller can be attached behind a suspended ceiling, on a wall, or any other structures in premises protected against atmospheric fallouts, mechanical damage, and unauthorized access.

The S2000-KDL is composed from a base with attached PCB (см. Figure 2) and the top cover. Figure 3 shows overall and mounting dimensions of the S2000-KDL.

To install the S2000-KDL secure its base on a DIN rail or hang this one on a vertical surface. In the latter case, drill three holes on the wall as shown in the layout (see Figure 3), then hang the S2000-KDL base on the two wood screw provided, and finally lock its position with the third wood screw provided.

Once the S2000-KDL base is attached to the wall or a DIN rail, close the S2000-KDL top cover and tighten the DIN 7982 tapping screw provided. If necessary, the screw head can be sealed.

SEC.RU | Короткий путь к информации Скачано с sec.ru

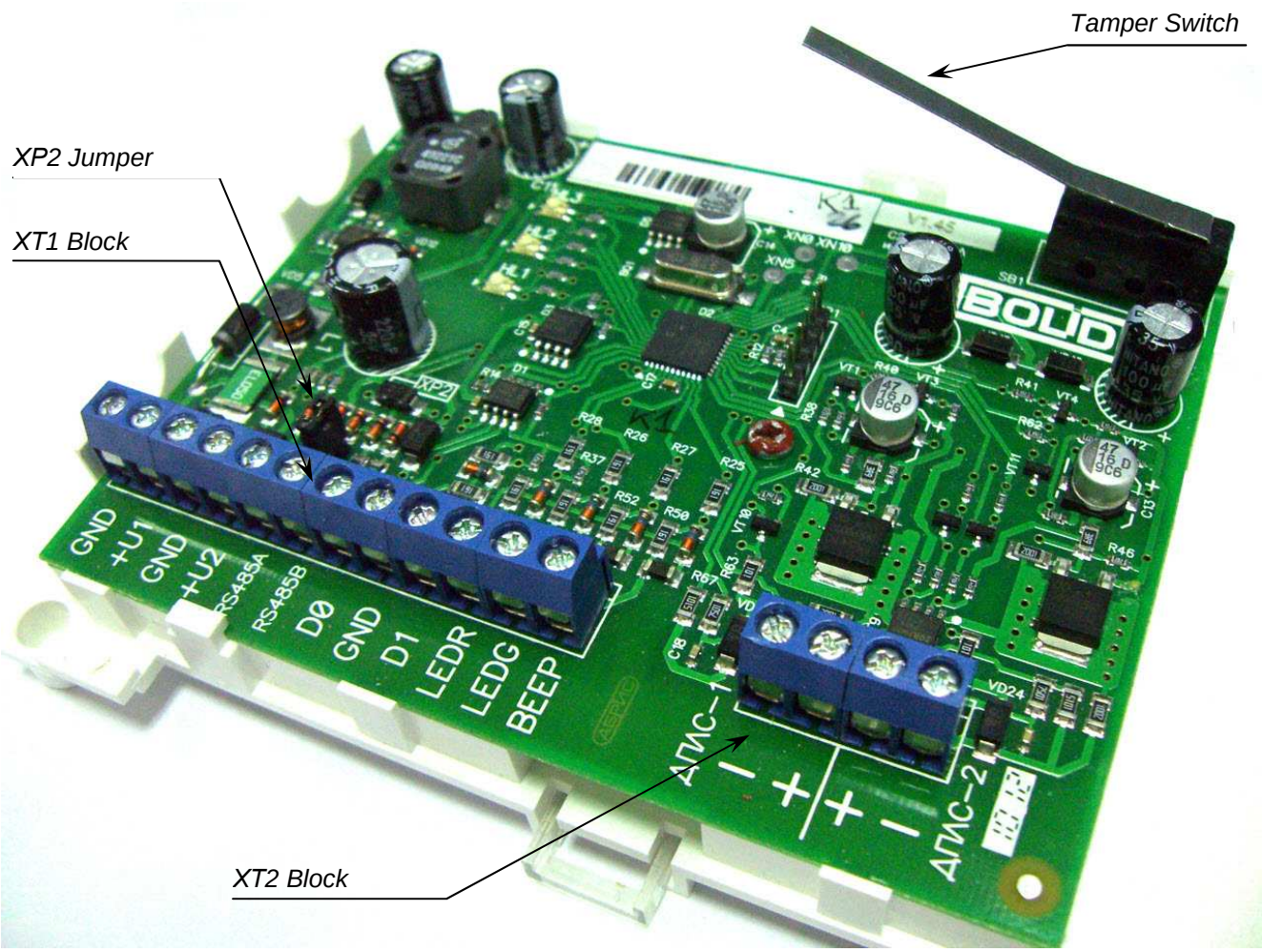

Figure 2. S2000-KDL Base and PCB

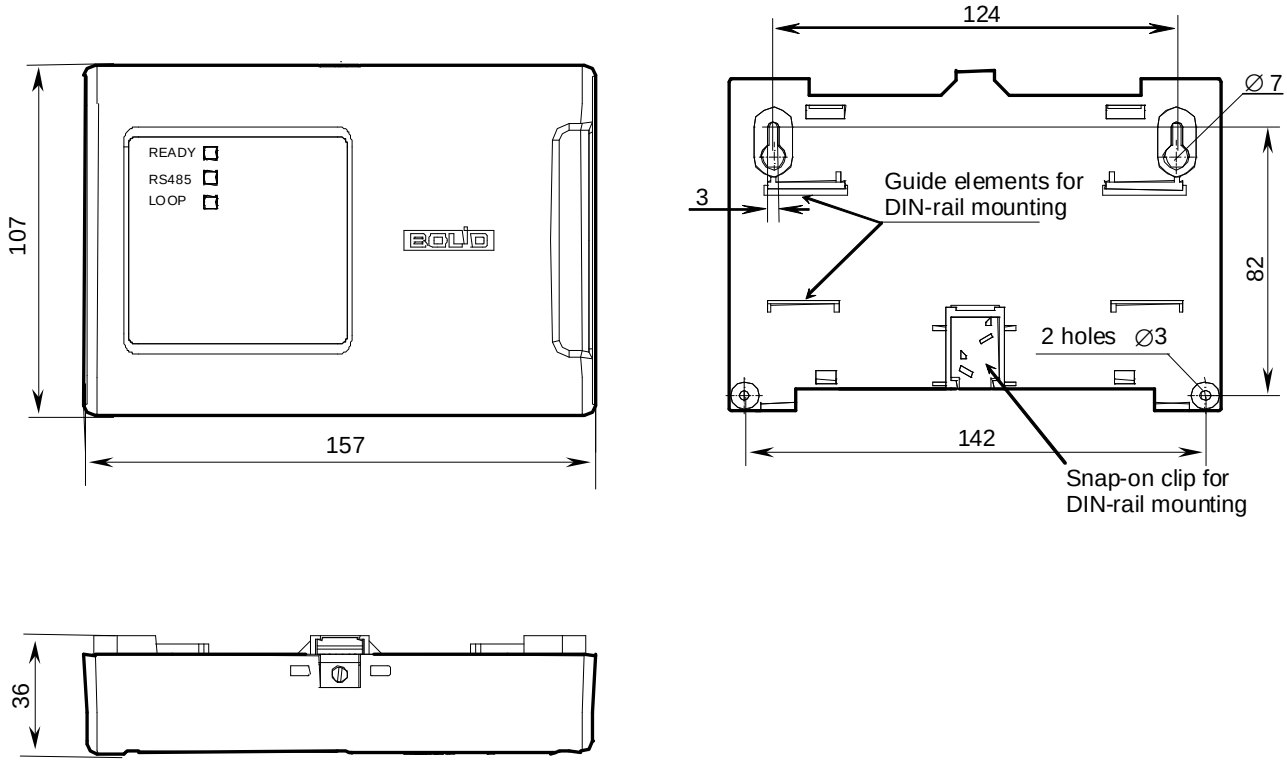

Figure 3. Overall and Mounting Dimensions of the S2000-KDL

SEC.RU | Короткий путь к информации Скачано с sec.ru

Figure 4 schematically shows the printed circuit board of the S2000-KDL with terminal block XT1 and XT2 to connect external circuits, which will be described in further sections of this document.

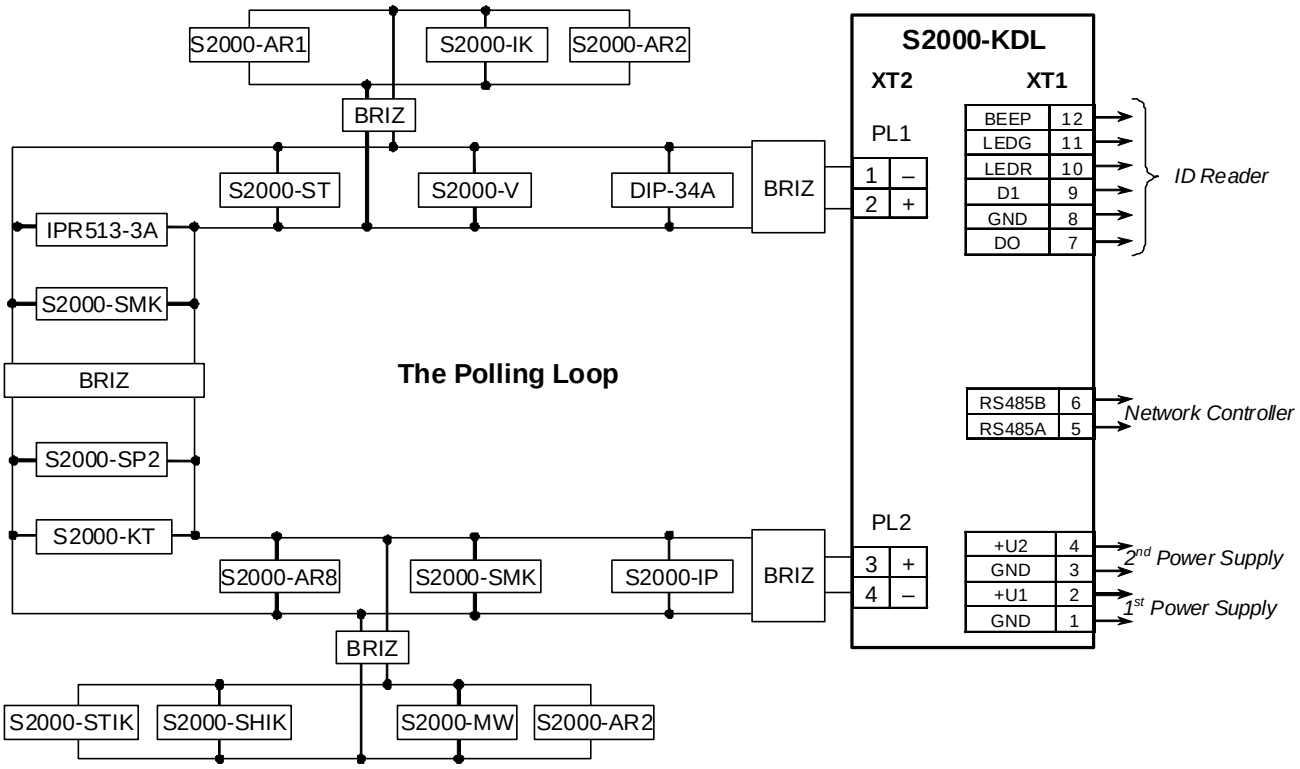

Figure 4. S2000-KDL Wiring Diagram

CONNECTING THE POLLING LOOP

Connect the polling loop to the relevant contacts of the XT2 terminal block (see Figure 4) according to the proper polarity: connect the positive contacts of the polling loops to the "+" contacts of the XT2 terminal block while the negative contacts to the "–" contacts.

Improper polarity of wiring the polling loop will cause communication loss between the controller and addressable devices

It is recommended to use twisted pair for the polling loop.

Polling Loop Topology

Addressable devices can be connected to the polling loop relative to any network topology such as bus, tree, ring, star, and combined. The total capacity of electrical wire must NOT exceed 0.1 μF. In case of total capacity's exceeding the pointed value, communications between the controller and addressable devices will be unstable (which cause the controller to generate such messages as ERR IN RESPONSE, COMM UNSTABLE, or DISCONNECTED).

SEC.RU | Короткий путь к информации Скачано с sec.ru

More reliable operation of the polling loop is ensured in case of its ring topology. Then, in case of failing a segment of the polling loop addressable devices retain communication with the controller at one of the outputs PL1 or PL2.

In addition, to maintain communication between the controller and addressable devices in the event of a short circuit failure, BRIZ short circuit isolators manufactured by Bolid should be brought to the polling loop.

Figure 5, Figure 6, and Figure 7 represent some topologies suitable for the polling loop.

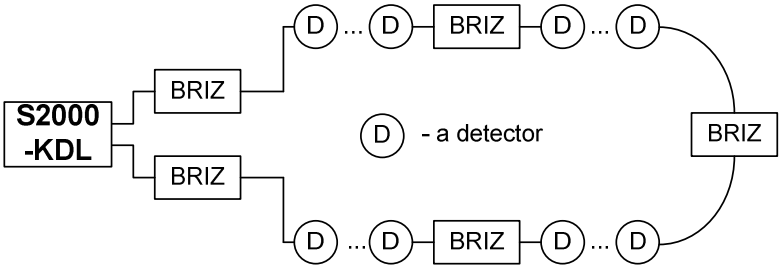

Figure 5. Ring Topology of the Polling Loop

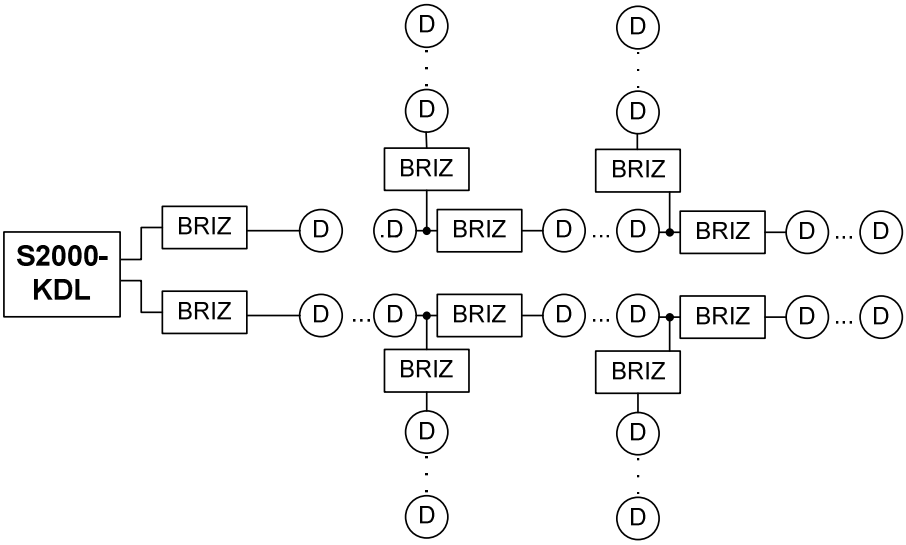

Figure 6. Tree Topology of the Polling Loop

SEC.RU | Короткий путь к информации Скачано с sec.ru

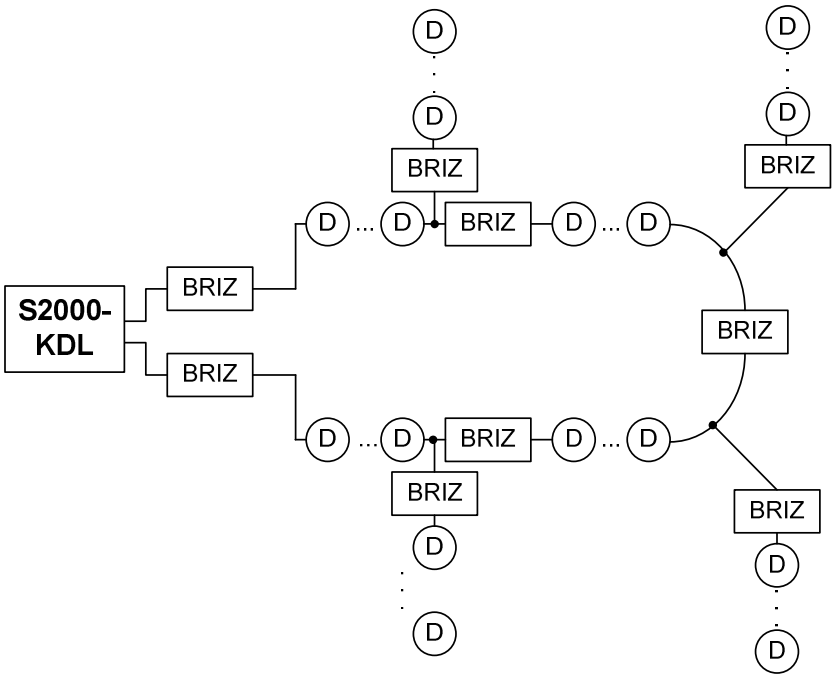

Figure 7. Mixed Topology of the Polling Loop

The Number of the Addressable Devices to Be Connected

The number of addressable devices which can be brought into the polling loop of the S2000-KDL depends on two factors:

1. Total current consumption of the devices connected to the polling loop which should not exceed 100 milliamp (current consumption of each addressable device should be specified in its manual), and also
2. The way the loop addresses of addressable devices are distributed in the address space of the polling loop: some devices occupy two or more adjacent addresses (see documentation of the addressable devices) and should be positioned in the address space in a certain way.

The maximum number of addressable devices in the polling loop is 127.

Length of the Polling Loop

The maximum length of a polling loop branch is to be estimated by the following algorithm:

1. Estimate the total current consumption of all the addressable devices which are to be brought to the polling loop branch (current consumption values of addressable devices are specified in their manuals).
2. Given that voltage drop across the input contacts of the addressable device which is the most distant from the S2000-KDL (at the end of the branch) shall not exceed 2 V, estimate the proper resistance of the polling loop.
3. Knowing the resistivity of wire material, estimate the maximum length of the polling loop branch.

SEC.RU | Короткий путь к информации Скачано с sec.ru

Example. Let 127 smoke detectors DIP-34A (or other addressable devices consuming 0.5 amp) are supposed to be brought in the polling loop of the S2000-KDL.

The total current consumption of all the devices is 63.5 mA.

Taking into account the maximum allowable voltage drop along the polling loop (2 V), the polling loop resistance must be equal to ~ 31.5Ω.

For with cross-sectional area of 0.75 square millimeters the estimated length of the polling loop will be approximately 600 meters while for wires with cross-sectional area of 0.9 square millimeters the length will be approximately equal to 700 meters.

Actually, loading real installations has a distributed nature, so drop voltage of 2 V occurs for distances more than the estimated length. Make estimations for each polling loop segment between two addressable devices. The resistance of the polling loop to the most distant addressable device shall not exceed 200Ω.

In state of an open failure in the polling loop with ring topology the resistance of the loop and its branches (taking into account formed parts of the loop) increases. So estimating polling loop parameters (loop length, branches – see above) shall be carried out for situations of opening the ring near PL1 and PL2 terminals of the controller.

If dropping the voltage between the S2000-KDL and the last addressable device in the loop exceeds an acceptable value in case of small cross section of wires, communications between the controller and devices can be unstable. In such case the controller will generate such messages as ERR IN RESPONSE, COMM UNSTABLE, or DISCONNECTED.

To analyze electric characteristics of the polling loop while commissioning, you can use the command of requesting the voltage of the polling loop measured by addressable devices (see Section `*Requesting Parameters of Addressable* Devices of this Manual). The returned value shows the amplitude of the loop supply voltage which is carried to the addressable devices. The voltage value is considered to be normal if it is at least 8 V. Requesting the voltage of the polling loop is supported only for those addressable devices which documentation contains information about supporting extended communication commands via the polling loop, DPLS_v2.xx.

CONNECTING ADDRESSABLE DEVICES

Procedures of connecting addressable devices into the polling loop of the S2000-KDL are described in details in the documentation for the relevant devices.

To avoid confusion in the configuration, the devices which addresses within the polling loop are set by DIP switches should be connected to the controller one at a time with assigning them to sequential addresses. If two or more addressable devices within the polling loop have the same loop address,

SEC.RU | Короткий путь к информации Скачано с sec.ru

the S2000-KDL cannot poll them properly while the UProg tool cannot display all the devices connected to the S2000-KDL.

To ensure all the addressable devices are connected correctly while commissioning use the device parameters request commands of the UProg (see Section `*Requesting Parameters of Addressable* Devices of this Manual).

WIRING THE RS-485 INTERFACE LINE

Connect the S2000-KDL to the network controller via the RS-485 interface bus by doing the following:

1. Couple the RS485A and RS485B terminals of the controller (see Figure 2 and Figure 4) with A and B wires of the RS-485 bus respectively.
2. Couple the GND circuits of the S2000-KDL and S2000/C2000M console as well as 0 V circuits of these devices (you can ignore this requirement if both devices are powered by the same power supply)
3. If the S2000-KDL ***is neither the first nor the last device*** within the RS-485 bus, remove XP2 jumper located close to RS485A and RS485B contacts (see Figure 2) which, if put on, includes an EOL resistor into the RS-485 interface bus

Improper polarity of wiring the S2000-KDL to the RS-485 interface bus will cause communication loss between the S2000-KDL and the network controller

CONNECTING POWER SUPPLIES

One or two power supplies of 12 V or 24 V can be connected to the S2000-KDL. We recommend you to use Bolid manufactured power supplies of RIP series. Connect power supplies to the pairs of contacts GND, +U1 and GND, +U2 of the XT1 terminal block (see Figure 2).

In case of supplying power to the power input contacts of the operable S2000-KDL the green READY LED on the S2000-KDL faceplate shall turn on.

CONNECTING A READER

An external ID reader with Touch Memory or Wiegand output interface can be connected to the relevant contacts of the S2000-kDL (see Figure 4). These contacts are described by Table 12.

If the reader is equipped with a single LED then, despite of its color, connect the LED control circuit to the LEDG terminal of the XT1 terminal block (see Figure 2)

SEC.RU | Короткий путь к информации Скачано с sec.ru

If input voltage of the reader is within a range of controller output voltages and the distance between the reader and the S2000-KDL doesn't exceed 50 meters, the reader power inputs can be connected directly to the +U terminal of the controller (see Figure 9 and Figure 10).

Table 12. Input Terminals to Connect a Reader to the S2000-KDL

Terminal		Input / Output	Destination
+U		Output	Reader input voltage (positive wire)
D0	TM Mode	Input / Output	Reader data circuit
	Wiegand Mode	Input	Reader D0 data circuit
GND		Output	Reader input voltage (negative wire)
D1	TM Mode	–	Unused
	Wiegand Mode	Input	Reader D1 data circuit
LEDR		Output	Reader red LED control circuit
LEDG		Output	Reader green LED control circuit
BEEP		Output	Reader sounder control circuit

Connecting Readers with Touch Memory Output Interface

Figure 8 and Figure 9 show wiring diagrams for connecting readers with Touch Memory Output Interface to the S2000-KDL.

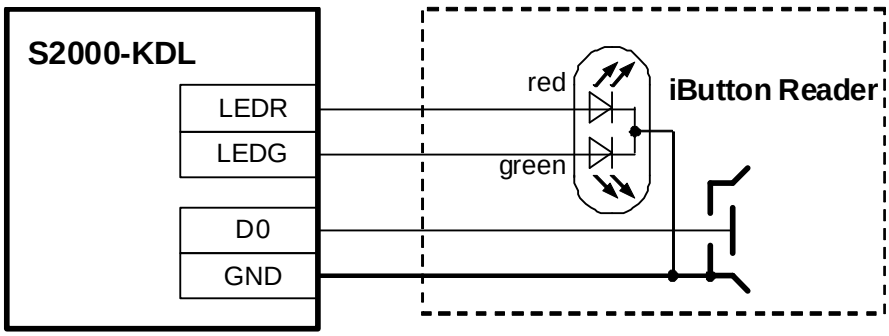

Figure 8. Connecting a Dallas iButton Reader to the S2000-KDL

SEC.RU | Короткий путь к информации Скачано с sec.ru

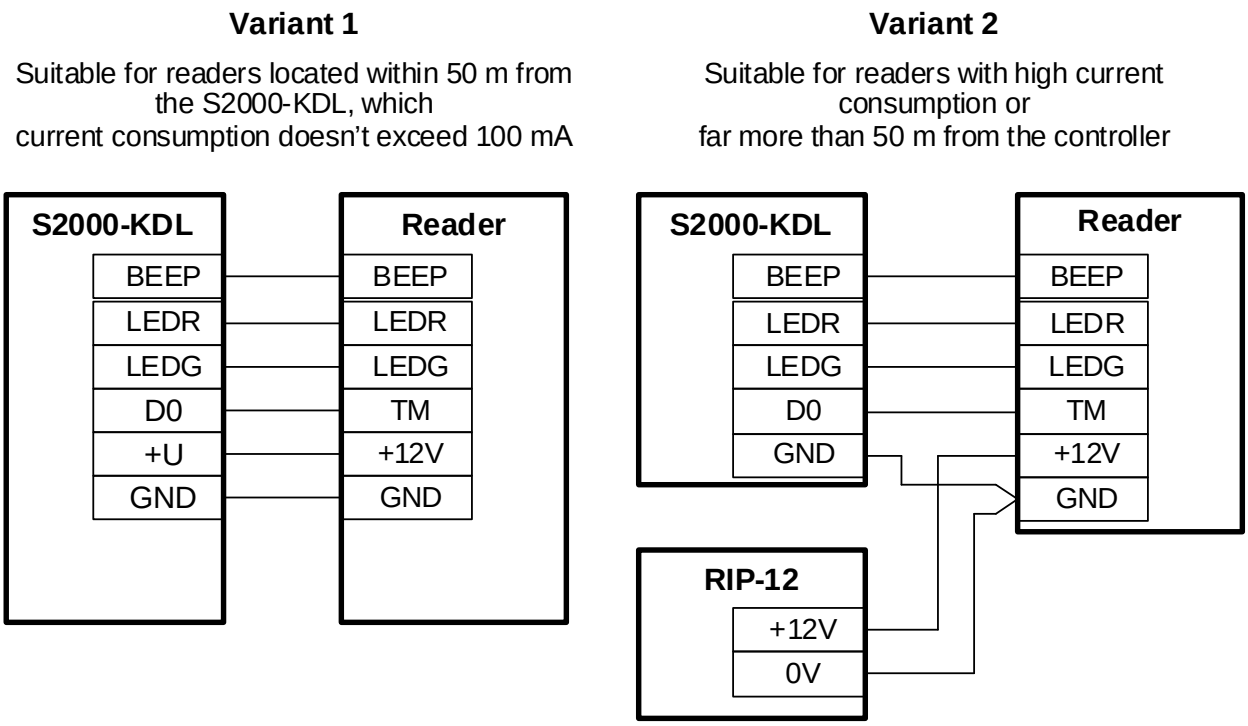

Figure 9. Connecting Readers with Touch Memory Output Interface to the S2000-KDL

Connecting Readers with Wiegand Output Interface

Figure 10 shows a wiring diagram for connecting readers with Wiegand Output Interface to the S2000-KDL.

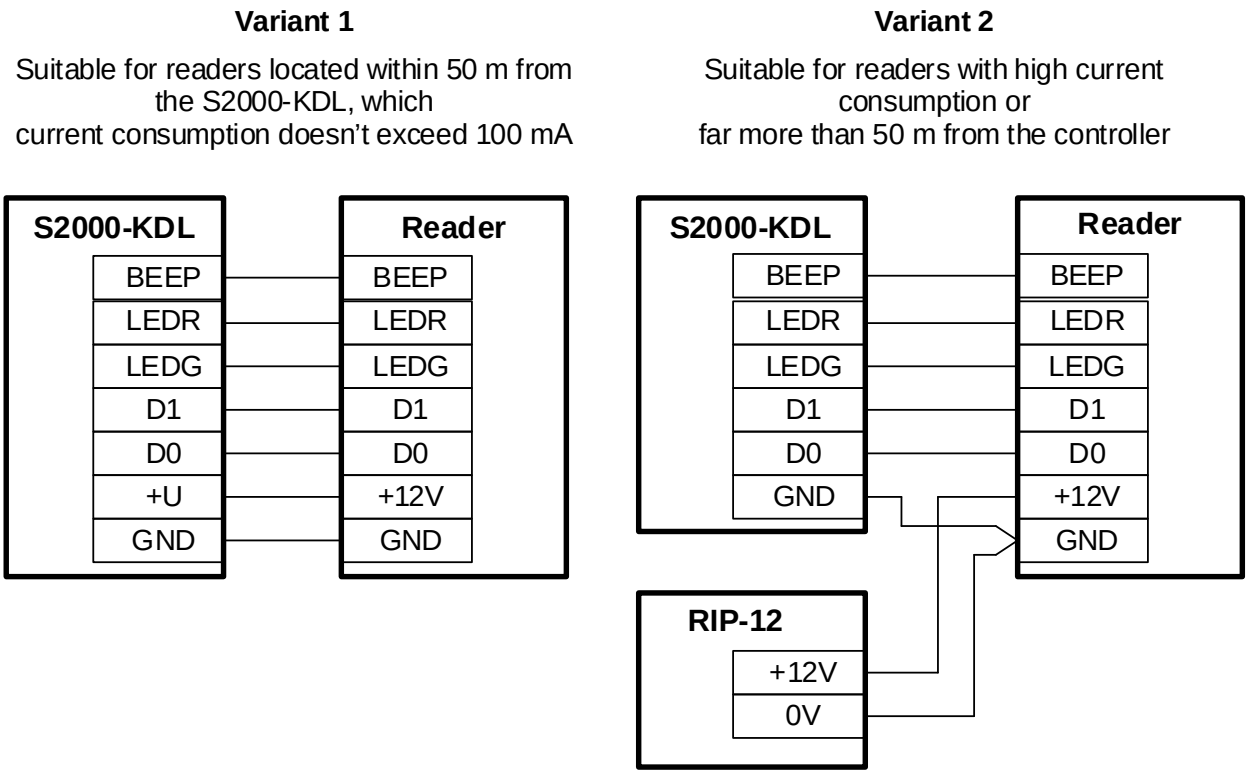

Figure 10. Connecting Readers with Wiegand Output Interface to the S2000-KDL

SEC.RU | Короткий путь к информации Скачано с sec.ru

CONNECTING AN ARMING REQUEST BUTTON (OPTIONAL)

In case of *centralized control* in an Orion system user's electronic keys (or authenticators) can have double destination. They can be used to request access to protected premises and to arm / disarm protected zones. If the S2000-KDL operates in such a system, requested operation is selected by means of an additional button connected to the S2000-KDL (see Figure 11).

When the button is pressed down (the D0 and GND contacts are coupled) then presenting an electronic key to the S2000-KDL reader will cause S2000-KDL's requesting the network controller for giving a command key to arm / disarm relevant system zones. Otherwise, presenting the key will be considered as the request to access protected premises.

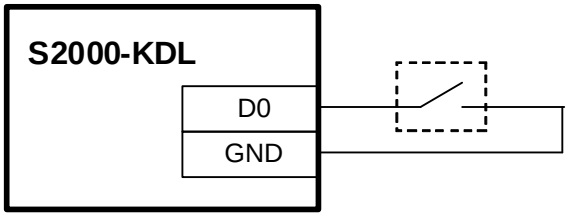

Figure 11. Wiring the Arming Request Button

GETTING STARTED

After installing the controller inspect all the installation for proper mounting and turn the S2000-KDL power on. If the controller is operable its READY LED will be lit steady in green.

SEC.RU | Короткий путь к информации Скачано с sec.ru

SEC.RU | Короткий путь к информации
Скачано с sec.ru

PROGRAMMING

SEC.RU | Короткий путь к информации Скачано с sec.ru

For using the S2000-KDL in a specific situation the controller and its polling loop should be configured to cooperate with connected addressable devices in accordance with the tasks expected to be solved and the specific application (fire or intruder alarms, building management, etc.)

To program the S2000-KDL do the following:

- Assign the controller to a network address within the RS-485 interface bus and adjust parameters of communicating data between the S2000-KDL and the network controller
- Program the own controller parameters and parameters of the external reader (if used)
- Program the loop addresses of connected addressable devices and enroll the devices into the controller database
- Define the relevant monitoring tactics for all input addressable zones
- Define the relevant control tactics for all the output zones (optionally)
- Register user's electronic keys (authenticators) for local arming / disarming (if applicable)
- Measure electrical parameters of the polling loop and ADC values of addressable devices while commissioning

The S2000-KDL and its addressable system is programmed by means of the UProg Configuration Tool, the tool for programming Orion system devices installed on the PC connected to the S2000-KDL.

A number of settings such as programming the S2000-KDL's network address and loop addresses of addressable devices can be done also by means of programming tools of the network controller.

S2000-KDL settings are stored in its non-volatile memory.

S2000-KDL ADDRESS SPACE ALLOCATION

Address space of the S2000-KDL polling loop consist of 127 logic addresses (numbers) which can be assigned to connected addressable devices. Each addressable device in the polling loop has to have a unique address in the polling loop (the so called 'loop address').

As a rule, addressable devices connectable to the polling loop are supposed to have a single loop address and can be allocated within the address space of the polling loop arbitrary.

However a number of devices, namely S2000-AR2, S2000-ASR2, and S2000-SP2 (if the last programmed to connect two executive devices) occupy *two adjacent loop addresses* within the polling loop. An S2000-AR8 addressable eight-input module occupies *eight adjacent loop addresses* in the S2000-KDL address space.

SEC.RU | Короткий путь к информации Скачано с sec.ru

PROGRAMMING ADDRESSES OF DEVICES CONNECTED TO THE POOLING LOOP

Most of addressable devices connectable to the polling loop stores their loop addresses in their non-volatile memories, these devices being programmed either by means of the network controller's tools or with the help of the UProg Configuration Tool (see below).

Some devices such as S2000-SP2 executive modules and S2000-IK rev.02 addressable detectors require programming their addresses manually by means of their DIP switches located on their printed circuit boards. To avoid conflicts and confusions while allocating address space we advise you to connect these devices and enroll them into the controller memory one by one, before mounting.

The procedures of programming loop addresses of the addressable devices are described in details in devices' specifications.

Programming / Changing Device Loop Numbers by Network Controller Tools

Programming loop addresses with the help of the network controller is required only for those addressable devices which store these addresses in their non-volatile memory. You are *strongly advised to program loop addresses before mounting the devices* in protected premises.

Programming loop addresses of addressable devices is performed if several addressable devices within the polling loop have the same loop address or it the current address is not known.

To program a loop address, send the S2000-KDL a command to turn programming mode on from the S2000/S2000M console. LOOP LED of the S2000-KDL shall flash doubly with long pauses.

To notify an addressable device that it is being assigned to a new address, some procedures are to be performed with the device (these procedures are described in details in the device's Manual). For example, to program loop address of an S2000-AR1 disconnect ALARM and TAMPER device circuits from the input module and couple -ALARM and -TAMPER contacts for a time about 5 s. For an S2000-AR2 input module, disconnect its circuits (device loops) DL1 and DL2 and couple +DL1 and +DL2 contacts for a time about 5 s. For an IPR513-3A, simulate double actuating of the call point within 10 s by double turning the test key, etc. In all these cases each device having received the command over the polling loop reprograms its current address for the new address.

For addressable devices occupying several addresses within the polling loop the address specified in the command as a parameter will be assigned to a circuit with the number 1 (for example, DL1 for an S2000-AR2). The second circuit (for example, DL2 for an S2000-AR2) is automatically assigned to an incremented number. For an S2000-AR8 the address specified in the command as a parameter (maximum 120) will be assigned to the DL1 while addresses of other circuits (device loops) will be automatically assigned sequentially in ascending order.

SEC.RU | Короткий путь к информации Скачано с sec.ru

If programming the address of the addressable device has completed successfully or 10 minutes has elapsed since entering the program mode then the device exits programming mode. To force S2000-KDL's exiting the mode of programming addressable devices, a relevant command should be sent.

Upon ***changing the loop address of an addressable device*** connected to the S2000-KDL the known current address of the device is replaced by the given address.

Changing device addresses is performed by Change Device Address commands sent by the S2000/S2000M console. In such a command both addresses, old and new, are specified. If the address has been changed the controller sends a Success message. If the address of a missing addressable device is specified in the command as an old address, the controller sends a message about missing the device with given address.

For the devices occupying more than a single address within the polling loop, changing an address specify the least of all addresses to be assigned. The next (adjacent) addresses will be assigned to monitored circuits of the device successively in ascending order.

SEC.RU | Короткий путь к информации Скачано с sec.ru

PROGRAMMING ADDRESS SYSTEM OF THE S2000-KDL BY MEANS OF UPROG

To program the S2000-KDL and its polling loop the Orion devices configuration tool, the UProg is intended. This program is installed on a PC connected to the S2000-KDL via one of the Bolid manufactured interface converters such as PI-GR, S2000-PI, S2000-USB, or USB-RS485.

The last version of the UProg.exe as well as additional information about using the S2000-KDL are available in the Internet at the address of **www.bolid.com**.

UProg Interface

After running the UProg its working window is opened on the PC display. At the top part of the window there are the Main Menu and the Toolbar.

Select the *Device* → *Read Device Configuration* command (or press <*Ctrl+F3*>, or select the icon from the toolbar). The Device Search window will be output on the display. Specify the number of the logic COM port the S2000-KDL is connected to, and the UProg will start searching the devices connected to this COM port of the PC. Then, the list of all found devices with their network addresses and version numbers will be shown at the display.

Select the entry for the S2000-KDL and press the *Select* button. The UProg will display the window with the controller settings located on several tabs (see Figure 12).

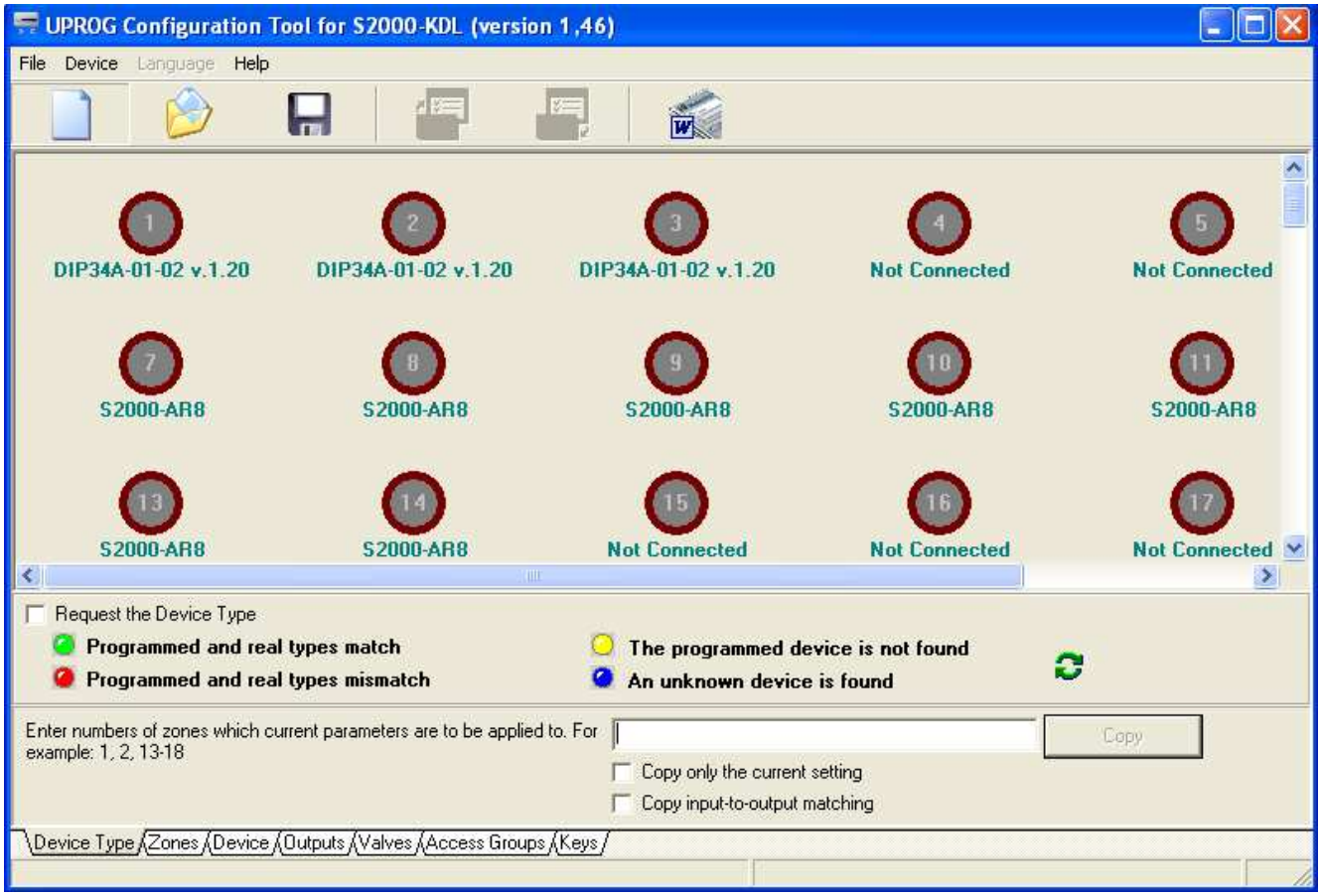

Figure 12. UProg Window for Configuring the S2000-KDL

SEC.RU Короткий путь к информации Скачано с sec.ru

If a configuration reading error message has been received, you can try to read configuration once more disabling the *Read By Blocks* option from the *Device* menu command.

You can also get an access to the controller settings by loading the controller configuration from the relevant file with .cnu extension written to any data storage, using the *File →Load Configuration File* command (or the <*F3*> button, or the toolbar icon).

Besides, a new configuration file can be created by using the *File → New Configuration* menu command (or the <*Ctrl+N*> button, or the toolbar icon).

The command *File → Base Configuration* is intended for loading factory setting values to the empty configuration created in the UProg.

The newly created or revised configuration can be:

Loaded to the controller memory	, or *Device → Write Configuration to This Device*
Loaded to the memory of another connected controller with specified network address	*Device → Write Configuration to Another Device*
Saved to a file of the internal UProg format with the *.cnu* extension	, or <*F2*>, or *File → Save Configuration to File*
Written as a text to an MS Word file	, or *File → Export Configuration to MS Word*

SEC.RU | Короткий путь к информации Скачано с sec.ru

Work Settings of the Controller

The work settings of the S2000-KDL include the network settings of the controller as well as settings of its operating parameters.

Network Settings of the S2000-KDL

The network settings of the S2000-KDL include a network address of the S2000-KDL over the RS-485 interface and the Set Response Pause option.

The *network address of the controller over the RS-485 interface* is stored in its non-volatile memory and designed to identify the controller uniquely within an Orion system. The S2000-KDL sends messages and receives commands from the network controller only at the address specified by this parameter. The network address must be unique for each Orion system device and can have a value in the range 1 to 127. Upon delivering the controller is assigned to the address of 127.

To program or change the network address of the S2000-KDL, select the command *Device→ Change Device Address* in the menu of the UProg.

The network address of the S2000-KDL can also be programmed or changed by means of the network controller as described in its Manual.

The *Set Response Pause* parameter allows using the controller within systems with complicated network configurations where retranslating data can be delayed (in radio-relay, fiber, and etc. communication systems). This pause introduces a permissible time delay for S2000-KDL responses to requests from the network controller.

To set or change Set Response Pause, select the command *Device → Set Response Pause* in the menu of the UProg. By default, the value of the response pause is equal to 1.5 milliseconds. If necessary, this value can be increased up to 500 milliseconds.

Setting Operating Parameters of the S2000-KDL

Operating parameters of the S2000-KDL and the reader connected to the controller are programmed on the Device tab of the UProg (see Figure 13).

Night-to-Day Threshold
Day-to-Night Threshold:

This option describes dividing process of monitoring analogue addressable smoke detectors (zones of the Type #8) to Night and Day operating modes. For Day time zone, to avoid false alarms (caused by dust, smoke, etc.) you can program higher thresholds for detectors to response with alarms then for the Night time zone.

To define Day and Night modes, select or type to the relevant fields the values of time thresh-

SEC.RU | Короткий путь к информации Скачано с sec.ru

olds between Night and Day time zones and alternatively. By default these values are set to 9:00 and 21:00.

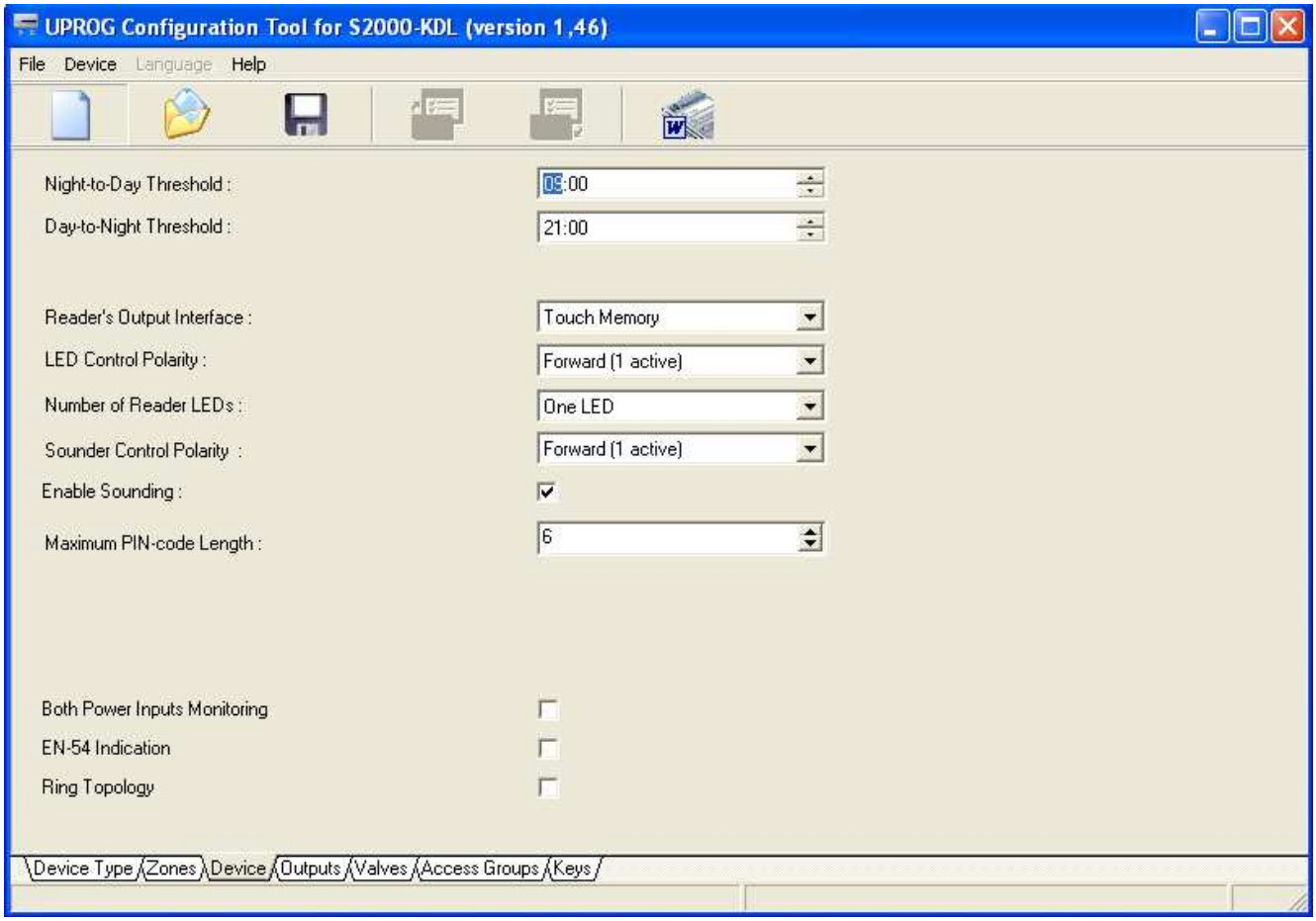

Figure 13. Settings of the S2000-KDL and the External Reader

Both Power Inputs Monitoring:

If the S2000-KDL is powered by two power supplies, the parameter specifies the condition for the controller to enter the Power Failed mode: upon dropping or shutting off voltage at least at one power input of in case of a both power supply's failure.

If the parameter is set on the S2000-KDL generates a Power Failed message when power supply voltage has dropped below 9.3 V at least at one power input while a Power Restored message is generated upon voltage's exceeding 9.8 V at both power inputs.

If the parameter is set off (default setting) then a Power Failed message is generated upon voltage's dropping at both power inputs while a Power Restored message is generated when a normal voltage value has returned at least at one power input.

To turn the Both Power Input Monitoring parameter on / off left click the relevant box at the right.

The Both Power Inputs Monitoring parameter is automatically turns on while turning on the EN 54 Indication parameter (see below)

SEC.RU | Короткий путь к информации Скачано с sec.ru

EN 54 Indication:

The parameter allows displaying statuses of fire detection zones by the controller LEDs in accordance with requirements of European Standards EN54-2 (see Section *S2000-KDL Light Alarms* of this Manual).

If the parameter is set on, indication is performed in accordance with requirements of European Standards EN54-2. If, otherwise, the parameter is set off, indication is performed in accordance with the own logic of the S2000-KDL. By default, the parameter is set off. To turn it on, tick the relevant box at the right from the parameter by left mouse button.

Upon turning on the EN 54 Indication parameter, the Both Power Inputs Monitoring option is set on automatically (see above)

Ring Topology:

This parameter allows regulating output of messages about polling loop failures in case of polling loop's having ring topology. If the parameter is set on, messages about polling loop's failures are output for each output of DPLS1 and DPLS2 individually. For example, in case when the polling loop has been open, the controller will generate messages 2WIRE1 LOST and / or 2WIRE2 LOST allowing locating the point of breaking quickly.

By default, the parameter is off. To turn it on, tick the box at the right of the parameter by the left mouse button.

SEC.RU | Короткий путь к информации Скачано с sec.ru

Programming Reader Parameters

Parameters of the external ID reader connected to the S2000-KDL are adjusted on the Device tab of the UProg (see Figure 13):

Reader's Output Interface:

Specify (select from the dropdown list) the type of the output interface of the reader, which is the way the code of the presented key is to be transferred to the controller: Touch Memory (by default) or Wiegand

LED Control Polarity:

This parameter defines the active logic level to control reader's LEDs. If the *Forward* polarity is programmed then turning LEDs on is performed by outputting the high logic level (logic 1) on the LEDG and LEDR contacts of the controller. If the *Reverse* polarity is selected, turning the LEDs on is performed by outputting the low logic level (logic 0).

By default, the Forward polarity is set (such a polarity, for example, is typical for Touch Memory devices). For most readers, as a rule, the Reverse polarity (active 0) is required. Select the proper polarity from the dropdown list in the field of this parameter

Number of Reader LEDs:

Set the number of reader outputs to control its LED (LEDs) connected to the controller and used in its operating

Sounder Control Polarity:

This parameter defines the active logic level to activate the sounder of the reader. If the *Forward* polarity is programmed then turning the sounder on is performed by outputting high logic level on the BEEP contact. If, otherwise, the *Reverse* polarity is selected, turning the sounder on is performed by outputting low logic level. The forward polarity is set by default. If necessary change this setting by selecting the proper polarity from the relevant dropdown list

Enable Sounding:

The option which enables the reader connected to the S2000-KDL to issue sound signals (on by default)

Maximum PIN Code Length:

This parameter is to be programmed for such readers as keypads with Wiegand output interface which sends the controller the digit one-by-one as a PIN code is being entered. The PIN code is considered to be completely entered when the number of entered characters has reached the programmed value. The number of PIN code digits can be given in the range of 1 to 12; by default, the PIN code length is equal to 6 digits

SEC.RU | Короткий путь к информации Скачано с sec.ru

Working with Addressable Devices Connected to the Polling Loop

You can work with addressable devices connected to the polling loop of the S2000-KDL by using the Device Type tab of the UProg (see Figure 14).

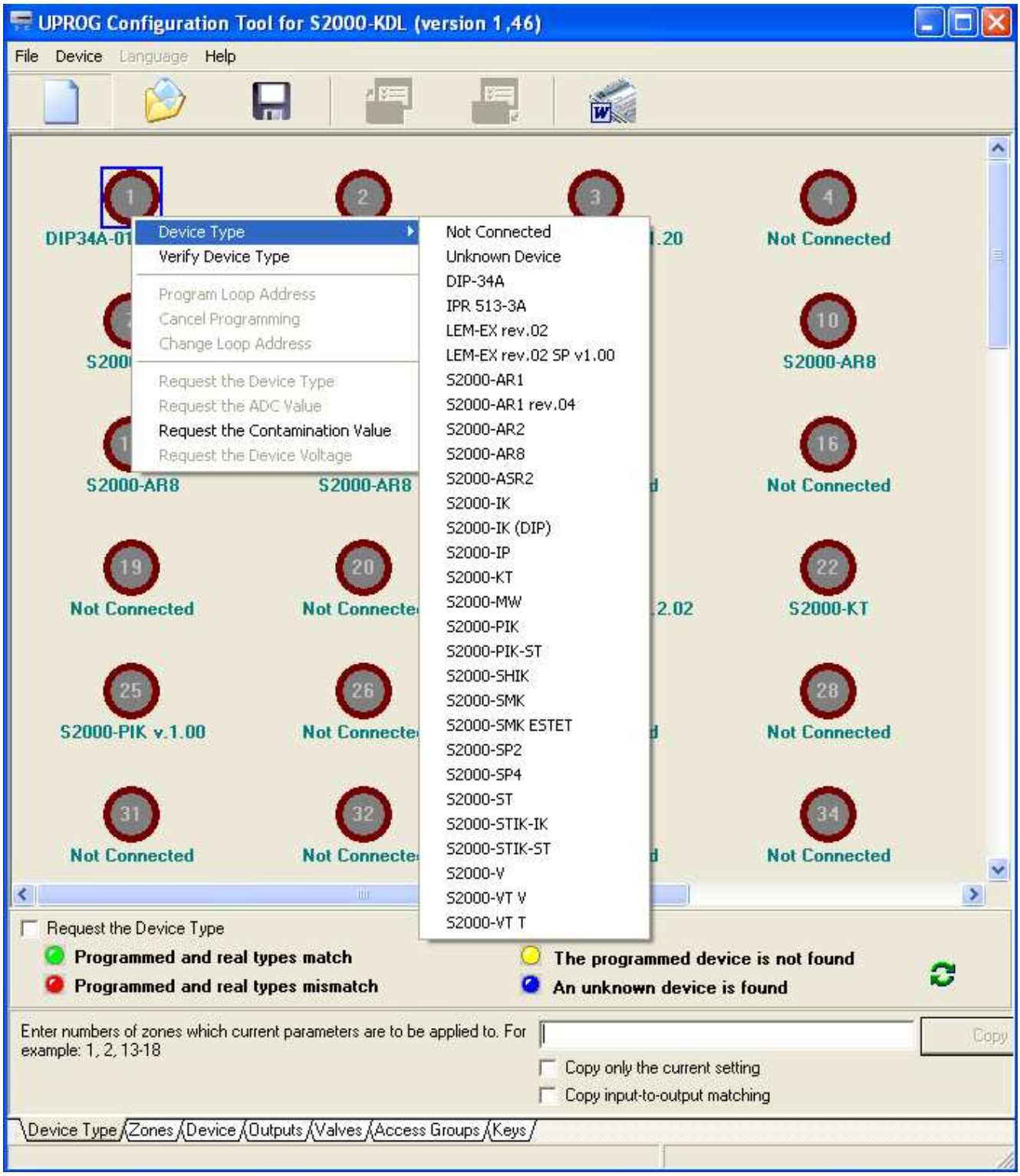

Figure 14. Programming Types of Addressable Devices in the Polling Loop

SEC.RU Короткий путь к информации Скачано с sec.ru

Here you can:

- Define types of addressable devices connected to each addressable zone of the polling loop
- Load loop addresses of addressable devices to their non-volatile memory
- Request parameters of addressable devices supporting communication protocol DPLS_v2.xx

Registering Addressable Devices Connected to the Polling Loop

Addressable devices connected to the polling loop of the S2000-KDL must be enrolled in the controller configuration with specifying their loop addresses and their types. While operating the controllers verifies correspondence between types of the device programmed for each addressable zone and devices physically connected at the zones. In case of mismatch the S2000-KDL output a Zone Configuration Error message.

On the Device Type tab of the UProg (see Figure 14) the address space of the polling loop is visualized schematically with already programmed or vacant addresses. Addressable zones are seen as circles with loop addresses in its centers. The captions below the circles show types of devices programmed for each zone (or Not Connected if the zone has not yet been programmed).

If the configuration is loaded to the UProg from the memory of the controller which is connected to the PC at the time then captures below circles denote devices which are found by the S2000-KDL as a result of controller's polling the loop (or Not Connected if no device was found at the address). The color of the circles displays the correspondence between zone settings and really connected addressable devices:

Grey: A vacant addressable zone (the addressable zone is neither programmed nor connected),

Green: The type of a really connected device matches the type of the device programmed in the database of the S2000-KDL,

Red The type of a really connected device doesn't match the type of the device programmed in the database of the S2000-KDL,

Yellow An addressable device is programmed at the address but the device is not recognized during polling,

Blue An addressable device has been found at the address during polling but this device is not programmed in the controller configuration.

Moreover, in the bottom of the tab there are *Request the Device Type* switch (at the left) and *Poll and Write* button with circular green arrows on it (at the right), these tools *being active* if only the *S2000-KDL is physically connected to the computer*.

Request the Device Type: If the flag is set on then (in case of normal communication with the controller over the RS-485 interface) the UProg in real time periodically sends the S2000-

SEC.RU | Короткий путь к информации Скачано с sec.ru

KDL commands to poll addressable zones in order to find out types of connected devices. The results of such polling are displayed in blue under each addressable zone (in the second line). If you leave the Device Type tab and select any other tab of the UProg, this flag will be automatically set off.

Poll and Write: Clicking on this tool initiates polling all the addressable devices of the S2000-KDL connected to the computer with the UProg installed followed by loading all the device types found at all addresses of the polling loop to the S2000-KDL's configuration displaying them just under the relevant zones of the controller in green. In such case, if before the polling the controller configuration included another device at some address, the device type will be replaced by the new value found in polling.

There are two ways to program a type of the device connected to some address of the polling loop:

1. Manually, by left clicking on the addressable zone followed by selecting the device type from the context menu (see Figure 14). If the loop address of the addressable device has not yet been programmed, assign the device to the address equal to the number of the addressable zone (see Section *Programming Loop Addresses of Addressable Devices*).
2. Automatically, by left double clicking on the zone or selecting Verify Device Type command from context menu of the addressable zone. This command operates similar to the Poll and Write command but is executed only for the current addressable zone. In case of auto-detecting the type of a device the device address should be pre-programmed (see Section *Programming Loop Addresses of Addressable Devices*).

If the S2000-KDL while polling addressable devices cannot find some devices, the most probable cause is a configuration conflict resulted from programming some devices for a single loop address

According to the type of a given device the UProg recognizes whether the device matches input or output of the polling loop. The devices specified as an S2000-SP2 and LEM-Ex SP are considered as addressable outputs, their descriptors automatically appearing on the Outputs tab of the UProg. The devices which are to be monitored and which conditions are to be analyzed (that is, all types of detectors and sensors and consumption controllers) are considered as input addressable zones, their descriptors appearing automatically in the list of input zones on the Zones tab of the UProg.

The type of the current addressable device can be copied for other zones using the Copy command at the right bottom part of the program window.

SEC.RU | Короткий путь к информации Скачано с sec.ru

Programming Loop Addresses of Addressable Devices

The UProg allows programming / changing loop addresses of addressable devices which store their addresses in their non-volatile memories. Programming loop addresses of addressable devices can also be performed by tools of the network controller (see Section *Programming / Changing Device Loop Numbers by Network Controller Tools* of this Manual). You are *strongly advised to program device addresses before mounting the devices* in the protected premises.

To **program the addressable device address** which corresponds to an addressable zone of the controller, right click on this zone and select the command *Program Loop Address* from the context menu (see Figure 14).

In state of sending this command the LOOP LED of the S2000-KDL shall flash doubly with long pauses. If the addressable device is equipped with its own LED the device also shall indicate its programming mode.

To notify an addressable device that it is being assigned to a new address, some procedures are to be performed with the device (these procedures are described in details in the device's Manual). For example, to program loop address of an S2000-AR1 disconnect ALARM and TAMPER device circuits from the input module and couple -ALARM and -TAMPER contacts for a time about 5 s. For an S2000-AR2 input module, disconnect its circuits (device loops) DL1 and DL2 and couple contacts +DL1 and +DL2 for a time about 5 s. For an IPR513-3A, simulate double actuating of the call point within 10 s by double turning the test key, etc. In all these cases each device having received the command over the polling loop reprograms its current address for the new address.

For addressable devices occupying several addresses within the polling loop the address specified in the command as a parameter will be assigned to a circuit with the number 1 (for example, DL1 for an S2000-AR2). The second circuit (for example, DL2 for an S2000-AR2) is automatically assigned to an incremented number. For an S2000-AR8 the address specified in the command as a parameter (maximum 120) will be assigned to the DL1 while addresses of other circuits (device loops) will be automatically assigned sequentially in ascending order.

If programming the address of the addressable device has completed successfully or 10 minutes has elapsed since entering the programming mode then the controller exits programming mode. To force S2000-KDL's exiting the mode of programming addressable devices, right click on the relevant zone and select the Change Loop Address command from the context menu (see Figure 14).

The command Change Loop Address allows ***replacing the loop address of an addressable device*** connected to the S2000-KDL from the known current address to the given address. In case of selecting the command for an addressable zone the UProg output a dialog box where a new address should be typed.

SEC.RU | Короткий путь к информации Скачано с sec.ru

For the devices occupying more than a single address within the polling loop, changing an address specify the least of all addresses to be assigned. The next (adjacent) addresses will be assigned to monitored circuits of the device successively in ascending order.

Requesting Parameters of Addressable Devices

If an addressable device connected to the polling loop supports the data communication protocol DPLS_v2.xx, the UProg can request device's parameters by means of following commands:

Request the Device Type:

The command allows you to find out what addressable device is found by the controller at the current address.

Request the ADC Value:

The command returns the digitized current value of some parameter measurable by the connected addressable device, this value being in the range of 0 to 254. For different addressable devices ADC values have different meanings. For example, for a DIP-34A the ACD value is the current smoke level, for an S2000-IP it is the value of ambient temperature in ^{o}C, while for an IPR513-3A this one displays the status of the manual call point (see the documentation for used addressable devices). The value of 255 is returned for zones which addressable devices cannot transfer analog values.

Request the Contamination Value:

The command returns a value of contamination within the DIP-34A smoke chamber measured in conventional units.

Request the Device Voltage:

The command returns a value of polling loop voltage at the location of the addressable device.

To request any parameter of an addressable device right click the device address and select the proper command in the lower part of the context menu (see Figure 14). Selected command's having returned the value of 255 means that this addressable device doesn't support the command.

SEC.RU | Короткий путь к информации Скачано с sec.ru

Programming Input Addressable Zones of the S2000-KDL

The zones of the polling loop which are defined as inputs (see Section *Registering Addressable Devices Connected to the Polling Loop* of this Manual) are to be programmed on the *Zones* tab of the UProg (see Figure 15).

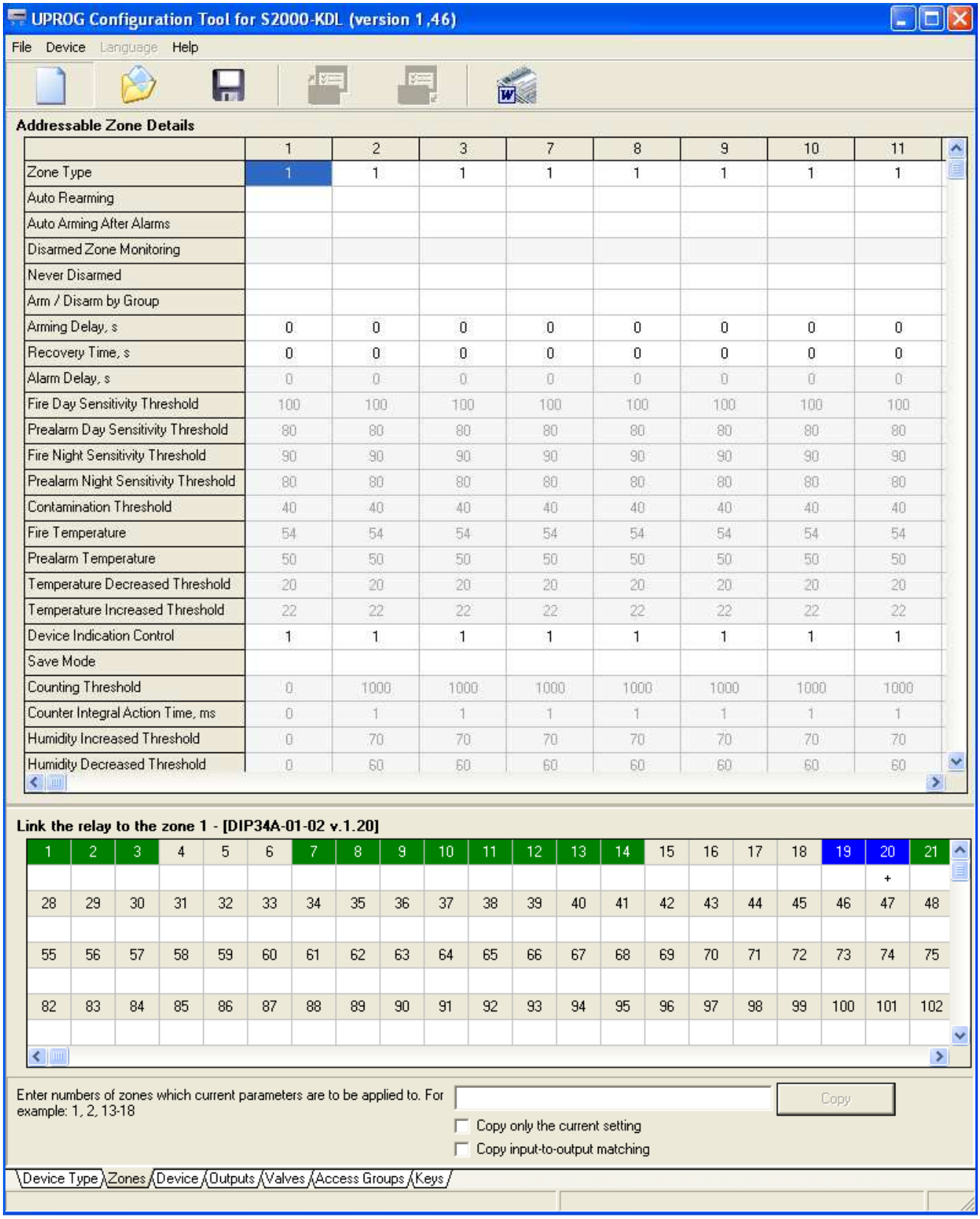

Figure 15. Programming Input Addressable Zones of the S2000-KDL

SEC.RU | Короткий путь к информации Скачано с sec.ru

In the columns of the upper window of the Zones tab there are descriptors of all input zones already programmed on the Device Type tab. In the bottom window links of the selected zone (selected column) with outputs (“relays“) of the S2000-KDL is shown. The output (selected in blue) which is linked to the selected zone (its number and name of the assigned addressable device are shown above the zone map) is marked with the character “+“.

Setting the Descriptors of Input Addressable Zones

The options which should be programmed for each input addressable zone of the S2000-KDL are as follows:

Zone Type:

The main parameter defining the S2000-KDL’s monitoring tactics for each input zone of the polling loop (see Section *Input Zones of the Polling Loop* of this Manual). A Zone Type must match the type of the addressable device connected to the zone (otherwise, the S2000-KDL will output zone configuration errors). Table 13 displays correspondence between types of the addressable devices connected at a polling loop address and types of zones which can be programmed for the devices at the loop address.

To program the proper type of zone, double left click on the field of Zone Type for the current zone and select the type in the dropdown list.

Table 13. Zone Types Suitable for Connected Addressable Devices

Addressable Device	Zone Type to Be Programmed
S2000-IK S2000-ST S2000-STIK S2000-V S2000-SHIK S2000-SMK S2000-PIK S2000-MW S2000-КТ	**4** Intrusion, or **5** Intrusion With Tamper Check, if you want to take notice of tampering the intruder detector’s enclosure, or **7** Entrance, if you want to realize the mode of operating the intrusion detector with delaying alarms, or **11** Panic to receive attack messages without turning alarm equipment on, or **6** Auxiliary for auxiliary zones from which only signal about breaking / recovering are expected
S2000-IP	**3** Heat Fire if the detector operates in the threshold mode, or **9** Heat Analogue With Programmable Thresholds in case of operating as an analogue fire detector, or **10** Thermostatic, if the detector is used for measuring ambient temperature
DIP-34A	**1** Smoke Fire, or **8** Smoke Analogue With Programmable Thresholds if the detector operates in the analog mode

SEC.RU | Короткий путь к информации Скачано с sec.ru

Addressable Device	Zone Type to Be Programmed
IPR-513-3A	**3** Heat Fire
S2000-AR1	**3** Heat Fire for interfacing fire detectors, or **6** Auxiliary for auxiliary zones from which only signal about breaking / recovering are expected, or **4** Intrusion to connect intrusion detectors, or **5** Intrusion With Tamper Check, if you want to take notice of tampering the intruder detector's enclosure, or **7** Entrance, if you want to realize the mode of operating the intrusion detector with delaying alarms, or **11** Panic to receive attack messages without turning alarm equipment on
S2000-AR2	**2** Combined Fire for interfacing fire detectors, or **6** Auxiliary for auxiliary zones from which only signal about breaking / recovering are expected, or **4** Intrusion for interfacing intrusion detectors, or **7** Entrance, if you want to realize the mode of operating the intrusion detector with delaying alarms, or **11** Panic to receive attack messages without turning alarm equipment on
S2000-AR8	**2** Combined Fire for interfacing fire detectors, or **4** Intrusion for interfacing intrusion detectors, or **5** Intrusion With Tamper Check, if you want to take notice of tampering the intruder detector's enclosure, or **7** Entrance, if you want to realize the mode of operating the intrusion detector with delaying alarms, or **11** Panic to receive attack messages without turning alarm equipment on
S2000-ASR2	**13** Counting
S2000-VT	**15** Humidity Measurement
LEM-Ex rev.2	**2** Combined Fire for interfacing fire detectors, or **5** Intrusion With Tamper Check for intrusion detectors (with transferring messages about opening / closing the detector enclosure), or **7** Entrance for intrusion detectors operating with an entry delay, or **11** Panic to receive attack messages without turning alarm equipment on, or **6** Auxiliary for auxiliary zones from which only signal about breaking / recovering are expected

SEC.RU | Короткий путь к информации Скачано с sec.ru

Auto Rearming:

Double left click on the field of this option for programmed zone if the zone should be automatically switched from the Arming Failed status to the Armed status on zone's being recovered.

Auto Arming After Alarm:

Double left click on the field of this option for programmed zone if the zone should be automatically switched from the Intrusion Alarm, Fire Alarm, or Fire Prealarm status on broken zone's being recovered, this recovering lasting for a time given by Recovery Time option.

Disarmed Zone Monitoring:

Set this option on by double left clicking for *intrusion protection zones* if changing their statuses must be monitored even if the zones are disarmed. In such case, in state of breaking and recovering zones the S2000-KDL will generate messages Not Ready To Arm and Ready To Arm correspondently. The zone is considered to be recovered if it is being in norm for a time equal to Recovery Time.

Never Disarmed:

Set this parameter on by double left click *for fire detection zones of the Types #1 and #3 and for Panic of the Types #11* to avoid their accidental disarming. In such case arm and disarm commands for these zones will be ignored. Upon receiving a disarm command for the zone which Never Disarm parameter is set on, the zone enters either in Armed status if it was in norm before, or, otherwise, the controller will generate a message corresponding the current zone status.

Arm / Disarm by Group:

Set the option on by double left clicking on all the zones which will be armed or disarmed together on controller's receiving the relevant command sent by the network controller. This parameter is valid only for zones which are assigned to some Device Types in the network controller's database.

Arming Delay:

Set the time (in seconds), for which the controller will delay trying to arm the zone. A non-zero Arming Delay is usually used for intrusion detection zones (for example in order a user having armed the zone can leave the premises for some time without generating alarms).

To set a time of Arming Delay, double click by left mouse button on the field and type a proper value or select the value by arrow buttons.

Recovery Time:

This option defines the time in seconds on having elapsed which the zone entered from one of the statuses Intrusion Alarm, Fire Alarm, Fire Prealarm, Not Ready To Arm, or Ready To Arm is considered as recovered. To set the time, double click by left mouse button on the field and type a proper value or select the value by arrow buttons.

SEC.RU | Короткий путь к информации Скачано с sec.ru

Alarm Delay:

This option is to be programmed for *zones of the Type #7* representing the time of delay between the moment of breaking the armed zone and the moment of switching the zone to an alarm status followed by activating alarms (running for relevant relays the common executive programs 1 – 8 and 12 (*Siren*)).

By default, this time is equal to 0 and can be increased up to 255 seconds. To program an Alarm Delay (or entry delay), double click by left mouse button on the field and type a proper value or select the value by arrow buttons.

Fire Day Sensitivity Threshold:

This option is to be programmed for *zones of the Type #8* representing the smoke obscuration level measured by the assigned smoke detector in the Day mode and converted to a digital value, on having reached which the S2000-KDL generate a Fire Alarm message for the zone. By default, the threshold value is equal to 100 and can be changed in the range of 90 to 120. To set or change the value of the threshold, double click by the left mouse button on the relevant box and type a proper value or select the value by arrow buttons.

Prealarm Day Sensitivity Threshold:

This option is to be programmed for *zones of the Type #8* representing the smoke obscuration level measured by the assigned smoke detector in the Day mode and converted to a digital value, on having reached which the S2000-KDL generate a Fire Prealarm message for the zone. By default, the threshold value is equal to 80 and can be changed in the range of 70 to 90. To set or change the value of the threshold, double click by the left mouse button on the relevant box and type a proper value or select the value by arrow buttons.

Fire Night Sensitivity Threshold:

This option is to be programmed for *zones of the Type #8* representing the smoke obscuration level measured by the assigned smoke detector in the Night mode and converted to a digital value, on having reached which the S2000-KDL generate a Fire Alarm message for the zone.. By default, the threshold value is equal to 90 and can be changed in the range of 80 to 100. To set or change the value of the threshold, double click by the left mouse button on the relevant box and type a proper value or select the value by arrow buttons.

Prealarm Night Sensitivity Threshold:

This option is to be programmed for *zones of the Type #8* representing the smoke obscuration level measured by the assigned smoke detector in the Night mode and converted to a digital value, on having reached which the S2000-KDL generate a Fire Prealarm message for the zone. By default, the threshold value is equal to 70 and can be changed in the range of 70 to 80. To set or change the value of the threshold, double click by the left mouse button on the relevant box and type a proper value or select the value by arrow buttons.

SEC.RU | Короткий путь к информации Скачано с sec.ru

Contamination Threshold:

This option is to be programmed for *zones of the Type #8* representing the level of contaminations inside of the smoke chamber of the detector converted to a digital value, on having reached which the S2000-KDL generates a Service Required message for this zone. By default, the threshold value is equal to 50 and can be changed in the range of 10 to 60. To set or change the value of the threshold, double click by the left mouse button on the relevant box and type a proper value or select the value by arrow buttons.

Fire Temperature:

This option is to be programmed for *zones of the Type #6* representing the value of ambient temperature in ^{o}C measured by the assigned S2000-IP, on having reached which the S2000-KDL generates a Fire Alarm message for the zone. By default, the value of the threshold is equal to 54 ^{o}C and can be increased up to 85 ^{o}C. To set or change the value of the threshold, double click by the left mouse button on the relevant box and type a proper value or select the value by arrow buttons.

Prealarm Temperature:

This option is to be programmed for *zones of the Type #6* representing the value of ambient temperature in ^{o}C measured by the assigned S2000-IP, on having reached which the S2000-KDL generates a Fire Prealarm message for the zone. By default, the value of the threshold is equal to 50 ^{o}C and can be changed in the range of 0 ^{o}C to 81 ^{o}C. To set or change the value of the threshold, double click by the left mouse button on the relevant box and type a proper value or select the value by arrow buttons.

Temperature Decreased Threshold:

This option is to be set for *zones of the Type #10* representing the value of ambient temperature in ^{o}C measured by an S2000-IP detector or S2000-VT sensor upon having dropped to which the S2000-KDL generates a message Low Temperature for this zone. By default, the threshold value is equal to 20 ^{o}C and can be changed in the range of – 55 ^{o}C to +125 ^{o}C. To set or change the value of the threshold, double click by the left mouse button on the relevant box and type a proper value or select the value by arrow buttons.

Temperature Increased Threshold:

This option is to be set for *zones of the Type #10* representing the value of ambient temperature in ^{o}C measured by an S2000-IP detector or S2000-VT sensor upon having reached which the S2000-KDL generates a message High Temperature for this zone. By default, the threshold value is equal to 22 ^{o}C and can be changed in the range of – 55 ^{o}C to +125 ^{o}C. To set or change the value of the threshold, double click by the left mouse button on the relevant box and type a proper value or select the value by arrow buttons.

SEC.RU | Короткий путь к информации Скачано с sec.ru

DO NOT confuse the increased / decreased thresholds defined for Thermostatic zones of the polling loop with the same thresholds defined for its relay outputs

Device Indication Control:

This option defines the way to control own indication of addressable devices equipped with LEDs and supporting the communication protocol *DPLS_v2.xx*. Left click on the box of this parameter of the programmed zone and select a proper value from the dropdown list:

0 – Indication Disabled (as a rule, indication of intrusion detectors are switched off so the attacker could not estimate the detector range and the detection zone);

1 (by default) – Local Tactics, controlling addressable device indication by its built-in logic as described in the device manual

2 – Controlled by the S2000-KDL (as shown in Table 9 of this Manual)

Controlling device indication is provided only for those addressable devices which supports the communication protocol DPLS_v2.xx (see device manuals)

Save Mode:

This option allows managing energy consumption of the addressable device depending on status of its zone. For detectors with microwave transmitter this parameter provides switching off the active element in reducing the impact of microwave radiation on people living in the protected area. An addressable device is switched to the Save Mode when its zone has been disarmed, the value of Disarmed Zone Monitoring being ignored.

Switching to the Save Mode is provided only for those addressable devices which support this mode and the communication protocol DPLS_v2.xx (see manuals for addressable devices)

Counting Threshold:

This threshold is programmed for *zones of the Type #13 (Counting)* which addressable utility meters S2000-ASR2 are monitored through. The threshold implies the number of pulses counted and accumulated in the S2000-ASR2 memory at which the value of counted pulses will be transmitted to the controller S2000-KDL.

This value should not be two small to avoid overloading the polling loop by frequent communications. However, this value also should not be too much in order in case of S2000-ASR2 power failures the number of lost pulses can be ignored. By default, the counting threshold is equal to 1000 and can be changed in the range of 0 to 65535. To set / change the counting threshold, double click by the left mouse button on the field of the parameter and type a proper value or select the value by arrow buttons.

Counter Integral Action Time:

This parameter is to be set for *"counting" zones of the Type #13* which addressable controllers

SEC.RU | Короткий путь к информации Скачано с sec.ru

S2000-ASR2 work at. It provides avoiding counting false pulses and means the time of integration upon filtering noise with a frequency higher than the frequency of counting pulses. By default, the Counter Integral Action Time is equal to 1 millisecond and can be changed for counters of different types in the range of 0.5 to 127.5 milliseconds. The maximum value of the integral action time must half the length of a counted pulse. To set / change the value, double click by the left mouse button on the field of the parameter and type a proper value or select the value by arrow buttons.

Humidity Increased Threshold:

This parameter is to be programmed for *zones of the Type #15* and represents the value of relative humidity in % measured by the relevant sensor S2000-VT, on having reached which the S2000-KDL generates the message High Level for this zone. By default, the threshold is 70% and can be changed in the range of 0% to 100%. To set or change the value of this threshold, double click by the left mouse button on its box and type a required value or select the value by arrow buttons.

Humidity Decreased Threshold:

This parameter is to be programmed for *zones of the Type #15* and represents the value of relative humidity in % measured by the relevant sensor S2000-VT, on having dropped to which the S2000-KDL generates the message Low Level for this zone. By default, the threshold is 60% and can be changed in the range of 0% to 100%. To set or change the value of this threshold, double click by the left mouse button on its box and type a required value or select the value by arrow buttons.

DO NOT confuse the increased / decreased thresholds defined for Humidity Measurement zones of the polling loop with the same thresholds defined for its relay outputs

Linking Inputs of the Polling Loop with its Outputs for Local Control

If events in some zone (zones) of the polling loop are expected to cause outputs of the polling loop to be activated (that is, a tactics of automatic local control by events in the zone is defined), it is necessary to link the zone with those relay output (outputs) which an executive program will be run for. If the link has not yet been programmed on the Outputs tab of the UProg – see Section "*Programming Addressable Outputs of the S2000-KDL*" of this Manual, then left click on those relays (marked in green on the zone map) which are to be linked to the zone being programmed.

In our example (Figure 15) the zone #1 (selected in the upper window) is linked to the output #20 (marked in blue in the bottom window). This means that in case of operating at this zone DIP-34A's having entered some status defined by the executive program given for the output #20, the output will be activated with implementing all details specified for this one (see Section "*Programming Addressable Outputs of the S2000-KDL*" of this Manual).

SEC.RU | Короткий путь к информации Скачано с sec.ru

Copying Settings of Input Addressable Zones

UProg provides copying input addressable zone settings to facilitate configuring the S2000-KDL. To copy settings of a current input zone of the polling loop to descriptors of other zones, enter the numbers of these zones into the right bottom dialog box on the Zones tab (Figure 15) and click Copy. If you need to copy a single parameter rather than all zone settings select this parameter of the current descriptor and set the flag *Copy Only the Current Setting* on. If you need to copy zone parameters along with its input-to-output links, tick the *Copy Input-to-Output Matching* box.

SEC.RU | Короткий путь к информации Скачано с sec.ru

Programming Addressable Outputs of the S2000-KDL

Addressable zones of the polling loop defined as outputs (see Section *Registering Addressable Devices Connected to the Polling Loop* of this Manual) are to be described on the Outputs tab of the UProg (see Figure 16). Here each addressable output is assigned to input addressable zones of the S2000-KDL (in case of local control) as well as to parameters of local control such as an executive program, activation time, and activation delay and so on.

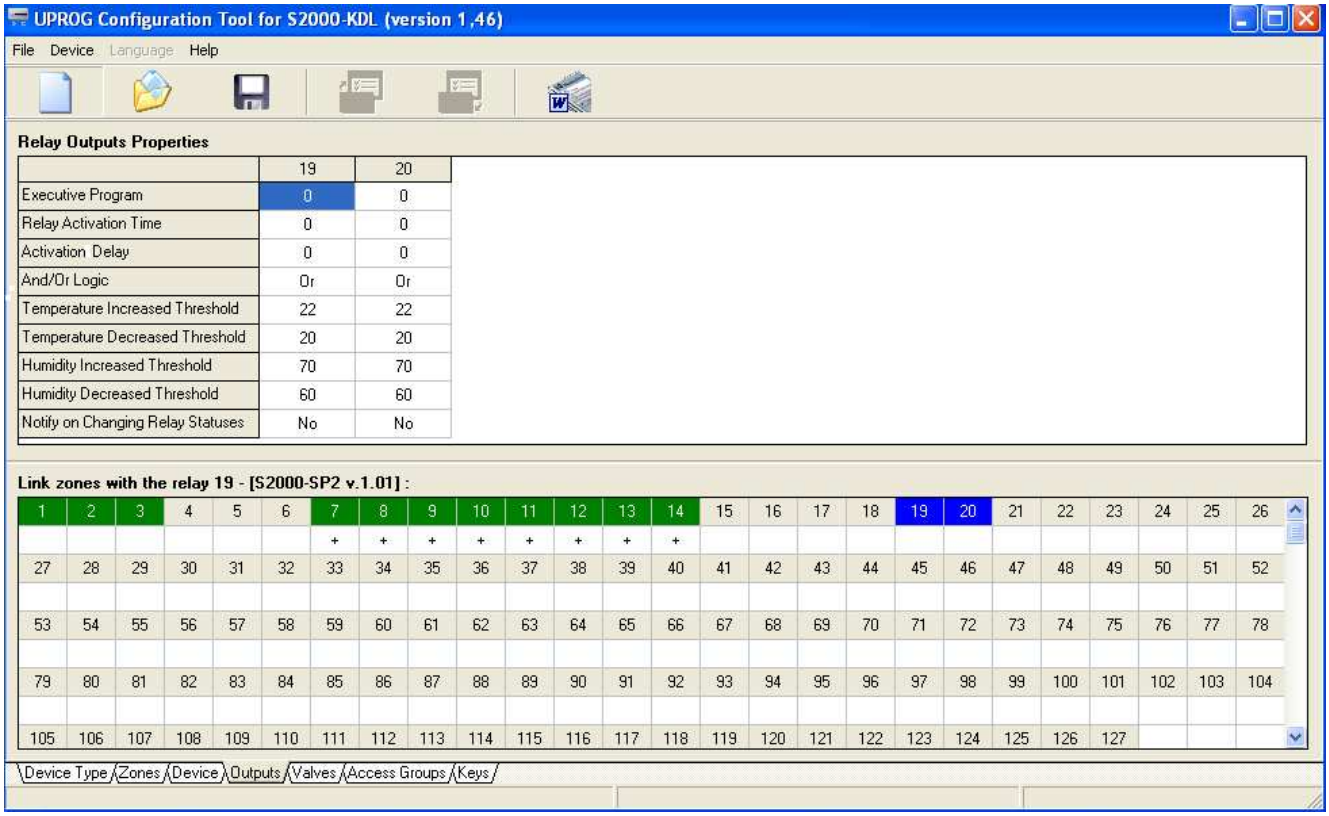

	19	20
Executive Program	0	0
Relay Activation Time	0	0
Activation Delay	0	0
And/Or Logic	Or	Or
Temperature Increased Threshold	22	22
Temperature Decreased Threshold	20	20
Humidity Increased Threshold	70	70
Humidity Decreased Threshold	60	60
Notify on Changing Relay Statuses	No	No

1	2	3	4	5	6	7	8	9	10	11	12	13	14	15	16	17	18	19	20	21	22	23	24	25	26
						+	+	+	+	+	+	+	+												
27	28	29	30	31	32	33	34	35	36	37	38	39	40	41	42	43	44	45	46	47	48	49	50	51	52
53	54	55	56	57	58	59	60	61	62	63	64	65	66	67	68	69	70	71	72	73	74	75	76	77	78
79	80	81	82	83	84	85	86	87	88	89	90	91	92	93	94	95	96	97	98	99	100	101	102	103	104
105	106	107	108	109	110	111	112	113	114	115	116	117	118	119	120	121	122	123	124	125	126	127			

Figure 16. Programming Addressable Outputs of the Polling Loop

The columns at the top part of the window contain descriptors of addressable outputs programmed on the Device Type tab of the UProg (the loop addresses of the relay outputs are shown at the tops of the columns). The upper window displays links between the selected output (column) and input addressable zones of the S2000-KDL which are highlighted in green. The zone which is assigned to the output is marked by the sign “+“.

Programming Outputs for Remote Control

To control a selected addressable output of the polling loop centrally and remotely by means of network controller commands do the following:

- Make sure the output is assigned to no input zone of the polling loop (all fields on the map of Output-to-zone bindings are empty), or clear the bindings, if presented, by left click, and

SEC.RU | Короткий путь к информации Скачано с sec.ru

➢ Set the Executive Program parameter to 0 (Remote Control) for the output or select the program which implies a suitable output status (on or off). To do this, double click by left mouse button on the parameter field, and then select a proper program from the dropdown list.

If there is an addressable zone of the S2000-KDL linked to the output, all remote control commands received from the network controller for this output (over the RS-485 interface) will be ignored. Local controlling the outputs has a higher priority than centralized controlling these ones.

When necessary to send the network controller messages about changing status of an output (upon output's being on or off), set the parameter *Notify on Changing Relay Statuses* to the value of *Yes*.

Programming Outputs for Local Control

For the outputs of the polling loop which are supposed to be controlled locally it is necessary to link each output to those input zones of the polling loop which changing of status should cause activating the executive program given for this output (if such links were not given while programming input zones on the Zones tab – see Section *Programming Input Addressable Zones of the S2000-KDL* of this Manual).

To assign the output to input addressable zones of the polling loop, select the column with the number of this output and left-click the fields of those zones at the bottom which will be linked to this output.

Then give the following parameters for each output:

Executive Program:

This setting defines the tactics of local control for the output (depending on statuses of zones assigned to the output as mentioned above) as well as the initial status of the output after turning the controller power on.

To give an executive program for an addressable output, double click on the field of this parameter for the output and select the required program from the dropdown list.

Table 4 on the page 40 of this Manual presents the list of all executive programs available for the S2000-KDL.

By default, all relay outputs of the S2000-KDL are assigned to the executive program 0 (*Remote Control*).

Relay Activation Time:

This option defines the time for which the output will be turned on or off in case of executing a programmed local program which implies limited executive time. Select the proper value by arrow buttons at the right part of the relevant field.

The maximum activation time for a relay is equal to 65,535 intervals 0.125 s each (8192 s in total). By default, relays are activated for a minute (60 seconds).

SEC.RU | Короткий путь к информации Скачано с sec.ru

For programs *#36 and #37 this parameter defines the time interval for which the output will be activated in a discrete mode* (see description of executive programs in the Section *Local Executive Programs for Controlling Polling Loop Outputs* of this Manual).

In case of centralized control this setting is ignored.

Activation Delay:

For executive programs #1…#8, #11, #12, #17…#35 this parameter defines the time in which the given executive program will be run after S2000-KDL's receiving a message about changing status of a zone linked with the output.

The maximum delay is 65535 intervals of 0.125 s (8192 s) each. By default an output is activated without delay (with the delay equal to 0 seconds).

For *programs #36 and #37 this setting has special meaning* regulating gaps between successive turnings the output on (see the description of executive programs in Section *Local Executive Programs for Controlling Polling Loop Outputs* of this Manual)

In case of centralized control this setting is ignored.

Notify on Changing Relay Statuses:

The parameter is set for each output individually.

If the parameter is set (equal to "Yes"), then a change of the status of the programmed output will cause S2000-KDL' generating the relevant message followed by sending the network controller the message along with the loop address of the output.

By default, the parameter is not set (equal to "No").

The following parameters are programmed only for outputs controlled by executive programs #36 and #37:

And / Or Logic:

By default, the output operated by one of the executive programs #36 or #37 and assigned with several Thermostatic / Humidity Measurement zones is activated if *at least one of the linked* of the Type 10 / 15 has entered the specified status (the value is "OR" ("0")). If the value "AND" ("1") is set for this parameter, the output will be activated if only *all the linked zones have entered the specified status*.

Temperature Increased Threshold:

This parameter defines the value of the ambient temperature (measured by the temperature sensor of an addressable device in the assigned addressable zone of the S2000-KDL) which receiving will cause *turning on the output for the program #36 and turning off the output for the program #37*.

The Temperature Increased Threshold is programmed for each output individually in the range from –55°C to +125°C. By default, its value is equal to 22°C.

SEC.RU | Короткий путь к информации Скачано с sec.ru

Temperature Decreased Threshold:

This setting defines the value of ambient temperature (measured by the temperature sensor of an addressable device in the assigned addressable zone of the S2000-KDL) which receiving will cause *turning off the output for the program #36 and turning on the output for the program #37*.

The Temperature Decreased Threshold can be defined for each output separately in the range of –55°C to +125°C. By default, its value is equal to 20°C.

DO NOT confuse the increased / decreased thresholds defined for relay outputs with the same thresholds defined for input addressable zones of the poling loop

Humidity Increased Threshold:

This setting defines the value of ambient relative humidity (measured by the humidity sensor of the S2000-VT in the assigned addressable zone of the S2000-KDL) which receiving will cause *turning on the output for the program #36 and turning off the output for the program #37*. The Humidity Increased Threshold can be defined for each output separately in the range of 0 % to 100 %. By default, its value is equal to 70 %.

Humidity Decreased Threshold:

This setting defines the value of ambient relative humidity (measured by the humidity sensor of the S2000-VT in the assigned addressable zone of the S2000-KDL) which receiving will cause *turning off the output for the program #36 and turning on the output for the program #37*. The Humidity Decreased Threshold can be defined for each output separately in the range of 0 % to 100 %. By default, its value is equal to 60 %.

SEC.RU | Короткий путь к информации Скачано с sec.ru

Programming Access Groups

Access Groups are used within an Orion system in order to give users the rights to manage the system.

Local Access Groups programmed for the S2000-KDL define management rights for users which keys are registered by the controller to manage addressable zones of the S2000-KDL. Each Access Group is assigned to a number of S2000-KDL addressable zones which will be armed and disarmed upon user's presenting a key with attributes of the Access Group at the reader.

Up to 128 user Access Groups can be programmed for the controller. The built-in Access Group #0 provides users with the authorities to arm and disarm all addressable zones of the S2000-KDL; this access group cannot be reprogrammed.

To program Access Groups of the S2000-KDL, use the Access Groups tab of the UProg.exe (see Figure 17).

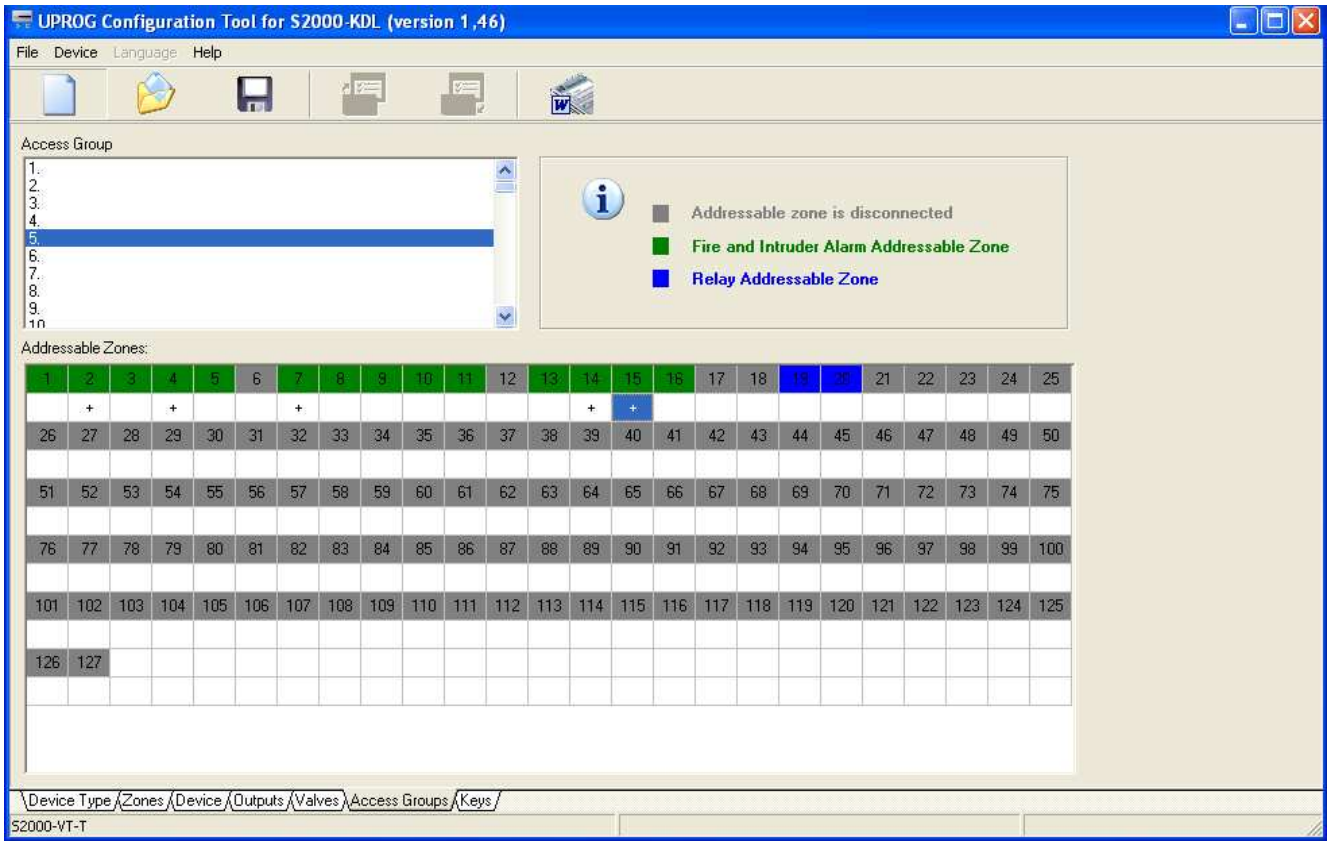

Figure 17. Programming Access Groups of the S2000-KDL

In the top of the window there is a list of Access Groups which can be programmed for the S2000-KDL while in the bottom of the window there is a map of controller addressable zones.

Addressable zones of the S2000-KDL which can be armed or disarmed are highlighted in green. Zones configured as addressable outputs are highlighted in blue while free zones are displayed in grey.

SEC.RU | Короткий путь к информации Скачано с sec.ru

At the right bottom part of the window a name of the device assigned to a current (selected) addressable zone is displayed. White fields under each address can be marked by the sign “+” if the zone is included into the selected Access Group, or, otherwise, be empty if the zone doesn't concern to this Access Group.

To include some addressable zones of the S2000-KDL into an Access Group, select the Access Group number in the upper list and double click each of the addressable zones. Now, upon presenting a key assigned to this Access Group the specified zones will be armed / disarmed.

To eliminate some addressable zones of the S2000-KDL from an Access Group (that is, to prohibit arming / disarming the zones for a key with this Access Group), clear fields of these zones by left double click.

Right click at any place of the bottom window enables including into a selected Access Group all addressable zones of the controller or unselect all zones to facilitate configuration process in some cases.

Figure 17 shows an example of programming the Access Group #5. For the current addressable zone #15 the type of the connected device, the temperature channel of the S2000-VT, is shown below, in the status line. In addition to the selected zone #15, the Access Group #5 includes also the addressable zones #2, #4, #7, and #14 – all these zones will be armed and disarmed upon presenting a key with Access Group #5 at the reader of the controller.

SEC.RU | Короткий путь к информации Скачано с sec.ru

Programming Keys

If addressable zones of the controller are to be armed and disarmed locally, you should enroll in the S2000-KDL memory codes of all the keys (user authenticators) which will be used for this purpose as well as give all necessary parameters of the keys. In case of *centralized control* keys are registered in the database of the network controller and *shall not be enrolled in the memory of the S2000-KDL*.

The S2000-KDL stores in its memory up to 512 user authenticator's codes.

If in an Orion system S2000-KDL controllers are connected to readers with different output interfaces (Touch Memory, Wiegand-26, Wiegand-44, etc.), designed to work with authenticators with the same type, then the code of an authenticator presented on one reader can differ from the code of the same authenticator read by another reader in the system. For example, the code of a Proximity card read by a reader with output interface Wiegand-26 can differ from the code of the same card read by a reader with output interface Wiegand-44 or Touch Memory. Or a PIN entered on a reader with output interface Wiegand-6 or Wiegand-8 (each entered digit of the code is sent to the controller individually) will differ from the same code entered on a reader with output interface Wiegand-26 or Touch Memory (all digits of the PIN are sent to the controller as a single block of data).

So, if the *S2000-KDL operates as a part of system, with other similar controllers, use the following guidelines*:

- ☞ If the keys are enrolled in the S2000-KDL memory remotely being read by the reader connected to another S2000-KDL, the data format of remote reader MUST match the data format of the reader connected to the controller being programmed.
- ☞ The format of PIN codes entered from readers with interface Wiegand-6 or Wiegand-8 (each entered digit of the code is sent to the controller individually) matches the format of PIN codes entered from a PC keyboard (for the UProg or Orion Database Administrator software). So, programming the S2000-KDL which operates with such readers, you can enter PIN codes (in the UProg) through the PC keyboard. For PIN readers with another format of output codes of programmed key MUST be entered only on the keypad of the reader.

To program electronic keys (authenticators), select the Keys tab of the UProg (see Figure 18). The left part of the window displays the list of keys which codes have been already stored in the S2000-KDL memory (if enrolled). Below the list you can see the number of already enrolled keys as well as a reminder that the maximum memory capacity to store keys is equal to 512.

SEC.RU | Короткий путь к информации Скачано с sec.ru

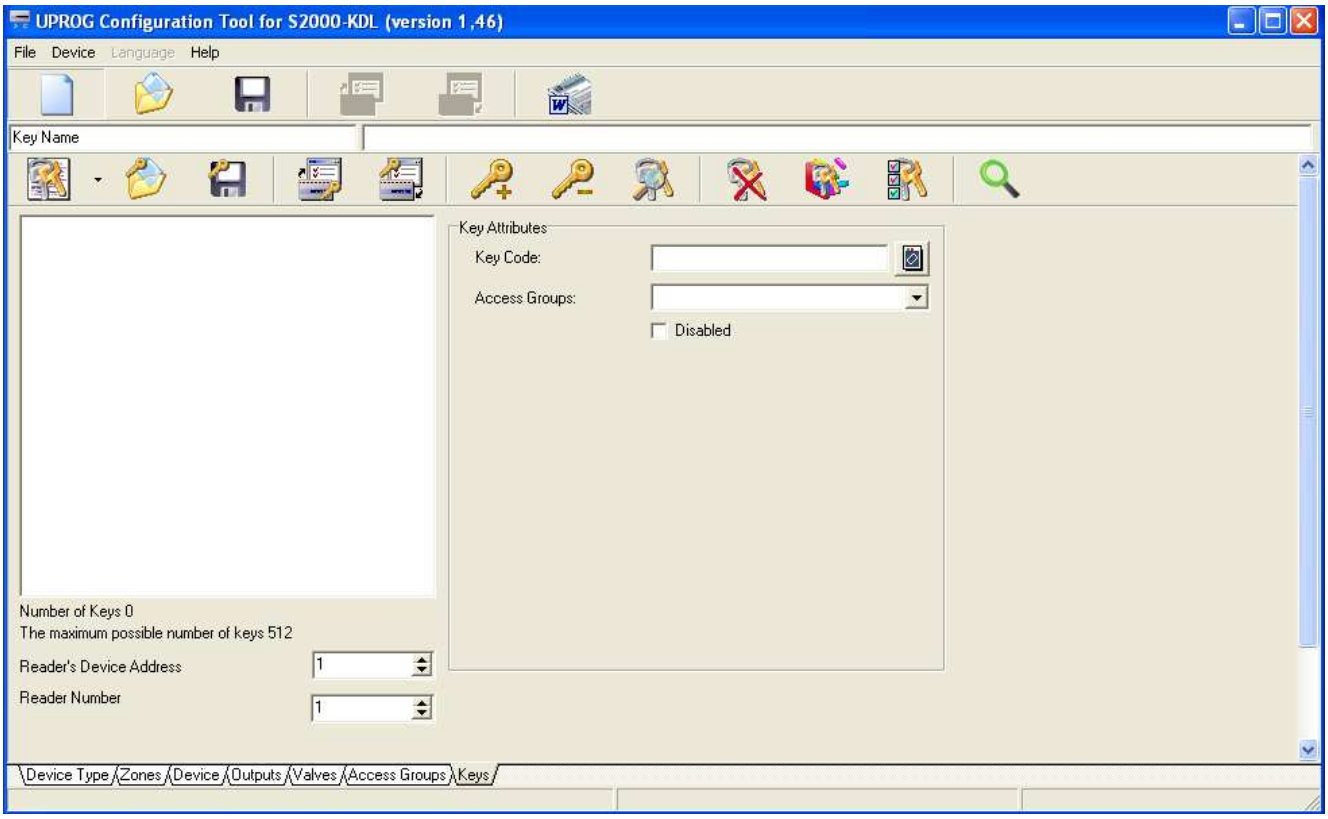

Figure 18. Programming electronic keys in the UProg

Keys tab of the UProg has its own toolbar:

- *Export Key Codes*: This tool enables writing all the keys listed at the left part of the window to a text file or MS Word file. If keys are written to an MS Word file, the keys are written along with all programmed attributes, while if keys are written to a text file, only key codes, names and order number in the list are recorded

- *Read Keys from File*: This tool works like the similar File menu command. The command enables loading to the UProg.exe key codes and attributes from a storage medium in order to change their descriptors and/or load them to the controller memory

- *Save Keys to File*: This tool works like the similarly command from the File menu. The command enables writing codes and attributes of the keys displayed at the left of the window to a special file (to any storage medium). This file then can be used to facilitate adjusting other controllers

- *Read Keys from Memory*: The tool provides loading to the UProg.exe the list of keys which are stored in the memory of the S2000-KDL connected currently to the PC

- *Write Keys to Memory*: The tool enables writing all key codes and attributes shown at the left part of the window to the memory of the S2000-KDL connected to the PC

- *Add Key*: The tool adds a new descriptor to the list of keys (the same can be done by pressing <*Ins*>)

- *Delete/Restore Key*: This tool 'deletes' and restores keys from the key list (the same can be done by pressing <*Del*>). It marks a key as deleted, but the key is not physically cleared from the controller memory and can be restored (see below)

SEC.RU | Короткий путь к информации
Скачано с sec.ru

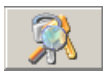

- *Find Key Duplicates*: This tool enables finding descriptors of all the keys that have the same code

- *Clear Keys*: Physically deletes all keys from the S2000-KDL memory

- *Defragment Key Memory*: The tool defragments the key area of the controller memory by clearing the keys marked as deleted followed by rearranging the key order in the list. During defragmentation process the keys marked as deleted are replaced with the legal keys, so after the defragmentation the numbers of the key descriptors are varied

- *Show Deleted Keys*: This switch defines whether the keys marked as deleted are visible in the key list or hidden. If the switch is on (the button is sunken), the keys marked as deleted are displayed in grey color and can be restored by pressing Delete/Restore Key button or <*Del*> button. If the switch is off, only active keys are shown in the list

- *Find Key*: Finds a key descriptor by the given code of the key

The UProg.exe provides adding keys to the S20000-KDL memory as well as deleting them and editing their attributes.

To work with keys stored in the S2000-KDL memory correctly, connect the controller to the PC, then run the UProg.exe, and finally load the keys from the S2000-KDL memory by means of the *button on the Keys tab*.

The UProg also allows handling keys (reading them from a file of a special format or enrolling by a reader) without loading keys already stored in the controller memory. But in such a case upon newly keys' being enrolled to the controller memory all data stored in the memory before are cleared.

Add / Edit a Key

There are two ways to add keys:

- To read keys from a special file by means of icon, or
- To create new key descriptors by means of icon or pressing <*Ins*>

In last case to add a key:

1. Press Add Key button (or <*Ins*>); the new entry named as 'New Key' will appear in the key list.
2. Describe the reader which the key being registered will be presented to. To do this specify in the boxes located below the key list the network address of an Orion system which the reader is connected to as well as the number of the reader if the device has more than one reader.
3. By pressing the button in the Main Key Code field read the code of the key.

SEC.RU | Короткий путь к информации Скачано с sec.ru

Please remember that (see page 105):

- ☞ *If the code of a key is registered by a reader connected to another device of the Orion system, data output format of the remote reader MUST match the data format of the reader? Connected to the programmed S2000-KDL*
- ☞ *If a reader with interface Wiegand-6 or Wiegand-8 is connected to the S2000-KDL, PIN codes can be entered either from the reader keypad or from the computer keyboard run under the UProg. For PIN code readers with other data output formats, while programming the keys enter their cones only from the reader keypad.*

Each key from the key list at Keys tab is assigned to a number of attributes (see also Section *Configuration Parameters of Readers and User Authenticators* of this Manual) which can be specified or revised (see Figure 18):

Key Name (the textual field above the key toolbar): Tape the textual name (or comment) which will be shown in the key list identifying the key.

Access Group: Assign the key to an Access Group which contains addressable zones of the S2000-KDL enabled to be armed / disarmed by a user presenting the key (the Access Group has to be programmed before - see Section *Programming Access Groups* above).

Disabled: This switch provides easy key locking/unlocking. When the flag is set the key is disabled. It can be necessary, for example, if the key is stolen or lost, or should be temporary disused for any reason.

Delete the Key

The term ‘delete’ can have two meanings for keys in the UProg Configuration Tools. A key can be physically deleted from the controller memory, or can be marked as ‘deleted’ when the key descriptor is excluded from the list of keys but is stored in the controller memory and can be easily restored.

To delete *all keys physically from the S2000-KDL memory*, select the button from the toolbar at the Keys tab. The deleted key cannot be restored.

In order to delete any key descriptor from the list of keys (to mark the key as ‘deleted’) select this key in the list and click on the button. If the Show Deleted Keys switch is set on (the button is sunken) then the descriptors of ‘deleted’ keys are shown with grey text; otherwise the ‘deleted’ keys are hidden.

In order to restore a ‘deleted’ key select it in the list of keys (the Show Deleted Keys switch must be set on) and click on the 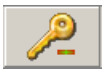 button.

SEC.RU | Короткий путь к информации Скачано с sec.ru

Managing the List of Keys

UProg Configuration Tool offers some additional utilities to handle keys.

The list of keys can be exported to a textual file or MS Word file by means of the button. If keys are written to an MS Word file, the keys are written along with all programmed attributes, while if keys are written to a text file, only key codes, names and order number in the list are recorded.

The UProg is supplied with two find commands, namely the Find Key Duplicates (to find all the keys which have the same code but different descriptors) and Find Key (to find key descriptors by the given code).

Besides, UProg is supplied with the Defragment Key Memory tool (the 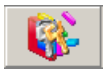 button) intended for reordering the list of keys and the defragmenting the S2000-KDL key memory. Use this command to facilitate key handling and to clear the controller memory from the keys which are marked as deleted if the list of keys are full (the last key in the list has the number 512). The algorithm of defragmentation works by the principle of replacing the first found ‘deleted’ key by an active key. Thus, the numbers of the keys in the list after defragmentation will differ.

Save Results

When key handling is completed, the amended key list MUST BE WRITTEN to the S2000-KDL memory by means of Write Keys to Memory tool (pressing the button).

After activation the described command all previously written keys at the controller memory are cleared.

The key memory area is isolated from other memory areas and is handled separately. To save keys, use only the toolbar Write Keys to Memory tool rather than other UProg save commands

The keys with their attributes can also be written to a special file with the extension of **.ki** which then can be loaded to an UProg at this/another PC, for example, to facilitate setting of other S2000-KDL controllers. The Save Keys to File command (the toolbar button) is to be used for this purpose.

SEC.RU | Короткий путь к информации Скачано с sec.ru

SEC.RU | Короткий путь к информации
Скачано с sec.ru

MAINTENANCE

SEC.RU | Короткий путь к информации Скачано с sec.ru

This Section discusses some possible minor faults while S2000-KDL operating and methods for their removal as well as preventive measures to be carried out during using the controller.

TROUBLESHOOTING

Troubles of the S2000-KDL or its addressable system are indicated by the controlled LEDs as well as transmitted to the Orion system over the RS-485 interface

Locally Indicated Troubles

? READY LED is not lit	No supply voltage on the +U1 and +U2 terminals of the XT1 block. Check the power supply (supplies) for proper operability and proper attachment of wires to the terminals.
? READY LED flashes with yellow twice per second	Power supply voltage at one or both contacts +U1 and +U2 of the XT1 terminal block has dropped below 9.3 V. Replace the faulty power supply (supplies)
? RS-485 LED flashes with green / yellow twice per second	No communications between the S2000-KDL and the S2000(M) console via the RS-485 port. Inspect attachment of the wires of the RS-485 bus to the RS-485A and RS-485B terminals of the XT1 block of the S2000-KDL as well as operability of the console and attachment of the RS-485 bus wires to the relevant terminals of the console
? LOOP LED is not lit provided that the EN 54 Indication is off, or LOOP LED is lit in yellow with short pauses once per second	No connection with any addressable device in the polling loop of the S2000-KDL
? LOOP LED is lit steady with yellow	➢ No communication with addressable devices programmed in the S2000-KDL configuration. Inspect attaching addressable devices to the polling loop and repair their communications with the controller Or ➢ One or more addressable zones are in Error in Response or Unstable Communication status that can result from high distances between the addressable devices and the controller or other design errors of the polling loop (see Section *Connecting the Polling Loop* of this Manual)

SEC.RU | Короткий путь к информации Скачано с sec.ru

? LOOP LED flashes with yellow twice per second	Short circuit failure or another trouble of the polling loop. Repair the trouble
? LOOP LED flashes with yellow once per second or flashes in yellow being lit steady in green	Communication is lost with at least one addressable device via 1 and / or 2 polling loop terminals. Repair the trouble

Troubles of the S2000-KDL Transferred to the Orion System

The following messages about troubles of the polling loop or addressable zones of the S2000-KDL can be displayed by the network controller or system keypads S2000-K, these messages being displayed with specified addresses or names of the controller and the addressable zones:

? ERR IN RESPONSE COMM UNSTABLE DISCONNECTED RELAY DISCONNECT	These messages can be generated at state of poor communications between the controller and the addressable device. The reasons for poor communications can be as follows: ➢ The voltage drop to the last addressable device in case of insufficient wire cross-section or the current-carrying capacity of the polling loop has exceeded its threshold value (see Section "*Connecting the Polling* Loop" of this Manual), or ➢ The total capacity of wires has exceeded the threshold value (see Section "*Connecting the Polling* Loop" of this Manual), or ➢ The addressable device and the polling loop operate in complex electromagnetic environment created by the equipment used at the facility To analyze parameters of the polling loop, you can use the command *Request the Device Voltage* (see Section `*Requesting Parameters of Addressable* Devices of this Manual). The value returned by the command for a zone will show the amplitude of the supply voltage carried to the device. The value of the voltage is considered to be normal if it is equal or above 8 V
? ZONE CONFIG ERR	The type of connected addressable device doesn't match the type of the device programmed for the zone while configuring or the programmed zone type doesn't match the type of the connected addressable device (see Sections *Registering Addressable Devices Connected to the Polling Loop* and *Programming Input Addressable Zones of the S2000-KDL* of this Manual)

SEC.RU | Короткий путь к информации Скачано с sec.ru

? SERVICE REQUIRED	Such a message with the specified zone address is generated for: ➢ An analog addressable smoke detector (zone of the Type #8) if the Contamination Threshold programmed for the zone has been exceeded for at least two hours, or ➢ An addressable smoke detector (zone of the Type #1 or #2) if the internal contamination threshold of the detector has been exceeded Having received this message, clean the smoke chamber of the detector
? FIRE TROUBLE	A failure of the sensor or the measuring channel of the addressable detector, temperature and humidity sensor, or consumption meter
? POWER FAILED	The power supply voltage on one or both terminals +U1 and / or +U2 of the XT1 terminal block has dropped below 9.3 V. Replace the improper power supply (supplies).
? LOOP TRBL OPEN	An open circuit failure in the addressable zone
? LOOP TRBL SHORT	A short circuit failure in the addressable zone; the resistance value is less than 100 Ω
? 2WIRE 1 LOST	No communication between the addressable device and the controller by the branch 1 of the polling loop
? 2WIRE 2 LOST	No communication between the addressable device and the controller by the branch 2 of the polling loop
? 2WIRE LINE SHORT	Short circuit failure in the polling loop (in the branch 1, branch 2)
? 2WIRE LINE TRBL	A trouble of the polling loop: voltage in the loop (branch 1, branch 2) exceeds the level generated by output circuits of the S2000-KDL

SEC.RU | Короткий путь к информации Скачано с sec.ru

PREVENTIVE MAINTENANCE

To make sure the S2000-KDL keeps proper operability it shall be inspected by a competent specialist at least on receipt and annually. The inspection algorithm shall include:

- ☞ Visual checking the S2000-KDL against contamination and mechanical damage
- ☞ Verifying the S2000-KDL for secure mounting and wire connection conditions
- ☞ Inspection of the controller operability in accordance with the techniques shown below

The controller must be tested under the following ambient conditions:

- Temperature: 25°C ± 10°C
- Relative humidity: 45% ÷ 80%
- Atmospheric pressure: 630 mm Hg ÷ 800 mm Hg

Power off the controller before connecting and disconnecting wires

Self-Diagnostic Routine

To start self-diagnostic, remove the S2000-KDL cover and press the tamper switch (see Figure 2) three times shortly and then a time more long. The ‘more long’ means keeping the tamper switch held down for at least 1.5 s while ‘shortly’ means keeping the tamper switch held down for 0.1 s ÷ 0.5 s. The pauses between pressings should be no less than 0.1 s and no more than 0.5 s.

If the controller is operable, all the LEDs (READY, RS-485, and LOOP) shall flash with long pauses one-by-one.

The controller’s not meeting the requirements said above makes it possible to raise a claim to the vendor.

SEC.RU | Короткий путь к информации Скачано с sec.ru

SEC.RU | Короткий путь к информации
Скачано с sec.ru

BOLID ONE YEAR LIMITED WARRANTY

Bolid Company and its divisions and subsidiaries («Seller»), 4 Pionerskaya Str., Korolev 141070, Moscow Region, Russia warrants its security equipment (the «product») to be free from defects in materials and workmanship for one year from date of original purchase, under normal use and service. Seller's obligation is limited to repairing or replacing, at its option, free of charge for parts or labor, any product proven to be defective in materials or workmanship under normal use and service. Seller is not responsible for results where the product is used improperly, where it is used for any application it is not intended for, used under unacceptable environmental conditions and mishandled or stored under improperly. Seller shall have no obligation under this warranty or otherwise if the product is altered or improperly repaired or serviced by anyone other than the Seller. In case of defect, contact the security professional who installed and maintains your security equipment or the Seller for product repair.

This one year Limited Warranty is in lieu of all other express warranties, obligations or liabilities. THERE ARE NO EXPRESS WARRANTIES, WHICH EXTEND BEYOND THE FACE HEREOF. ANY IMPLIED WARRANTIES, OBLIGATIONS OR LIABILITIES MADE BY SELLER IN CONNECTION WITH THIS PRODUCT, INCLUDING ANY IMPLIED WARRANTY OF MERCHANTABILITY, OR FITNESS FOR A PARTICULAR PURPOSE OR OTHERWISE, ARE LIMITED IN DURATION TO A PERIOD OF ONE YEAR FROM THE DATE OF ORIGINAL PURCHASE. ANY ACTION FOR BREACH OF ANY WARRANTY, INCLUDING BUT NOT LIMITED TO ANY IMPLIED WARRANTY OF MERCHANTABILITY, MUST BE BROUGHT WITHIN 12 MONTHS FROM DATE OF ORIGINAL PURCHASE. IN NO CASE SHALL SELLER BE LIABLE TO ANYONE FOR ANY CONSEQUENTIAL OR INCIDENTAL DAMAGES FOR BREACH OF THIS OR ANY OTHER WARRANTY, EXPRESS OR IMPLIED, OR UPON ANY OTHER BASIS OF LIABILITY WHATSOEVER, EVEN IF THE LOSS OR DAMAGE IS CAUSED BY THE SELLER'S OWN NEGLIGENCE OR FAULT. Some countries do not allow limitation on how long an implied warranty lasts or the exclusion or limitation of incidental or consequential damages, so the above limitation or exclusion may not apply to you.

Seller does not represent that the product may not be compromised or circumvented; that the product will prevent any personal injury or property loss by burglary, robbery, fire or otherwise; or that the product will in all cases provide adequate warning or protection. Buyer understands that a properly installed and maintained alarm may only reduce the risk of a burglary, robbery, fire or other events occurring without providing an alarm, but it is not insurance or guarantee that such will not occur or that there will be no personal injury or property loss as a result. CONSEQUENTLY, SELLER SHALL HAVE NO LIABILITY FOR ANY PERSONAL INJURY, PROPERTY DAMAGE OR OTHER LOSS BASED ON A CLAIM THE PRODUCT FAILED TO GIVE WARNING. HOWEVER, IF SELLER IS HELD LIABLE, WHETHER DIRECTLY OR INDIRECTLY, FOR ANY LOSS OR DAMAGE ARISING UNDER THIS LIMITED WARRANTY OR OTHERWISE, REGARDLESS OF CAUSE OR ORIGIN, SELLER'S MAXIMUM LIABILITY SHALL NOT IN ANY CASE EXCEED THE PURCHASE PRICE OF THE PRODUCT, WHICH SHALL BE THE COMPLETE AND EXCLUSIVE REMEDY AGAINST SELLER. This warranty gives you specific legal rights, and you may also have other rights which vary from country to country. No increase or alteration, written or verbal, to this warranty is authorized.

SEC.RU | Короткий путь к информации Скачано с sec.ru

4 Pionerskaya Str., Korolev 141070,

Moscow Region, Russia

Phone/fax: +7 495 775-71-55

Email: info@bolid.ru, overseas@bolid.com

www.bolid.com

SEC.RU | Короткий путь к информации

Скачано с sec.ru