USER MANUAL

PD 6500*i*

MODEL 11684xx

GARRETT™
METAL DETECTORS
www.garrett.com

USA
Security Division
Garrett Metal Detectors
1881 West State Street
Garland, Texas 75042-6797 USA

Phone: 972-494-6151
Fax: 972-494-1881
Email: security@garrett.com
Website: www.garrett.com

OUTSIDE USA
International Division
Garrett Metal Detectors
1881 West State Street
Garland, Texas 75042-6797 USA

Phone: 972-494-6151
Fax: 972-494-1881
Email: international@garrett.com
Website: www.garrett.com

SEC.RU | Короткий путь к информации
Скачано с sec.ru

SEC.RU | Короткий путь к информации
Скачано с sec.ru

MANUFACTURER CAUTION

Read Thoroughly Before Operating

CAUTION! Use of this equipment in a manner not specified by the manufacturer may result in damage to property or injury to persons.

Electrical:	100 – 240 V~ +10% – -15%
	1.0 - 0.5A
	50/60 Hz
Installation Category:	II
Pollution Degree:	2
Maximum Relative Humidity:	95% non-condensing
Operating Temperature:	-4ºF (-20ºC) to +158ºF (70ºC)
Maximum Altitude:	3000 meters

CAUTION! PD 6500*i* must be firmly anchored to the floor or optional adhesive floor mounts attached to reduce the risk of injury to persons or property damage due to accidental knock down.

Warning! Battery Safety: The optional Battery Backup Module and the CMA Interface module contain rechargeable batteries that may contain small amounts of harmful substances.

- Caution: Do not short circuit. Serious burns may result.
- Caution: Do not dispose of batteries in a fire. They may explode.
- Caution: Do not open or mutilate batteries. They may contain an electrolyte which is toxic and harmful to the skin and eyes.
- Caution: Replace batteries with the same type and number of batteries as originally installed in the equipment.

- Caution: Do not put the batteries in trash that is disposed of in landfills. When disposing of the battery, comply with local ordinances or regulations and your company's safety standards.
- Recycling centers and retailers with recycling programs may be found at www.rbrc.org.

SYMBOLS:

Alternating current	Protective conductor terminal	CAUTION! Risk of electric shock	CAUTION! Refer to accompanying documentation	Recycle

Garrett Metal Detectors and garrett.com are trademarks and registered trademarks of Garrett Electronics, Inc. If further assistance is required, please contact the factory using contact information on front cover.

SEC.RU | Короткий путь к информации Скачано с sec.ru

MEDICAL SAFETY

Garrett Metal Detectors makes every effort to ensure its products are safe for use. Extensive research by Garrett has produced no information which would indicate that its products have any adverse effects on medical implants, pregnancy, recording media or magnetic strips. Garrett makes every effort to cooperate with medical device manufacturers and to communicate with agencies such as the United States Food and Drug Administration and Health Canada as a means of assuring product safety. The electromagnetic fields produced by Garrett products are similar to those encountered in the daily environment and meet U.S. and International standards for electromagnetic emissions.

Garrett recognizes that certain medical devices may have additional requirements which may require special care. Any recommendations or directives issued by personal physicians or medical device manufacturers should be followed. If, for any reason, (e.g. doctors orders, etc.), a patron objects to being scanned with a metal detector, it is recommended that alternative procedures be used.

The following should be considered when developing a security checkpoint screening plan.

- **Traffic Flow -** Traffic flow should remain consistent and encourage unrestricted traffic flow as a means of minimizing the time a person remains within the archway of a walk-through metal detector.

- **Alternative Screening -** Alternative screening methods such as scanning with a hand-held metal detector, hand searching or denial of access should be clearly defined in checkpoint screening procedures as approved alternatives to screening with the walk-through metal detector.

- **Personnel Training -** Security screening personnel should be instructed in the care of persons with special medical needs and use of alternative screening methods that meet the requirements of medical practitioners or medical device manufacturers.

SEC.RU | Короткий путь к информации Скачано с sec.ru

TABLE OF CONTENTS

1. GENERAL DESCRIPTION OF PD 6500*i* 6
1.1 TECHNICAL SPECIFICATIONS 7
1.2 REGULATORY INFORMATION 7
1.3 DESCRIPTION OF CONTROLS, DISPLAYS AND ALARMS 9

2. INSTALLATION 11
2.1 SITE SELECTION & REQUIREMENTS 11
2.2 UNIT ASSEMBLY 16
2.3 MULTIPLE WALK-THROUGH SITE INSTALLATION 19
2.4 STABILIZING 22
2.5 INSTALLATION COMPLETION 22

3. CONTROLS & ADJUSTMENTS 22
3.1 MENU TABLE 23
3.2 POWER ON / OFF 23
3.3 SELF TEST 24
3.4 SUPERVISOR AND ADMINISTRATOR LEVEL ACCESS 24
3.5 DETECTOR SETTINGS 24
3.6 FACTORY DEFAULT SETTINGS 24
3.7 CODE RESET 33

4. PROGRAM & SENSITIVITY SETTINGS 35
4.1 PROGRAM SELECTION 35
4.2 SELECTING SENSITIVITY AND ZONE BOOST SETTINGS 35

5. OPERATION 38
5.1 OPERATIONAL TESTING 38
5.2 OPERATOR RESPONSIBILITIES 38

6. MAINTENANCE / TROUBLESHOOTING 40
6.1 LOCATING AND RESOLVING NOISE SOURCES 40
6.2 ERROR CODE TABLE DIAGNOSTICS 42
6.3 REPAIR 44
6.4 REPLACEMENT PARTS 45
6.5 WARRANTY INFORMATION 47

7. RELAY OPTIONS 48
7.1 AC CONTROL 48
7.2 DC CONTROL 48

8. ACCESSORIES 50
8.1 BATTERY PACK MODULE 50
8.2 POWER CORD JUMPER - 10' 50
8.3 DESKTOP REMOTE CONTROL 51
8.4 MAGNADOLLY WHEEL TRANSPORTER 52
8.5 ADHESIVE FLOOR MOUNTS 53
8.6 STABILIZER BARS 53
8.7 CMA INTERFACE MODULE 54
8.8 OPERATIONAL TEST PIECE (OTP) & FLAT TEST PIECE (FTP) 54

SEC.RU | Короткий путь к информации Скачано с sec.ru
PDi User Manual.indd 5 4/12/2007 3:43:49 PM

1. GENERAL DESCRIPTION OF PD 6500*i*

Basic Description

The Garrett PD 6500*i* (Model #11684xx) is a digitally controlled pulse induction metal detector.

Memory

All program selections and settings are maintained in electrically erasable non-volatile memory. The unit will maintain all settings even when disconnected from power. No battery is required for memory retention.

Unique Target Pinpointing

The Garrett PD 6500*i* is an advanced Digital Signal Processor (DSP)-based walk-through metal detector that provides superior target detection with excellent metal discrimination capabilities. Multiple targets are pinpointed on the left, center or right side of the body from head to toe within 33 distinct areas using a unique array of Light Emitting Diodes (LED's) located on the exit side of each panel. Independent zone by zone calibration capability insures optimal archway field uniformity, regardless of installation challenges.

Improved Sensitivity

An improved multi-coil design allows programming for the detection of the smallest of metallic targets regardless of shape and orientation.

Traffic Flow

Pacing lights with international "wait" ( ) and "proceed" ( ) symbols are located on the entrance side of each panel and allow smooth and efficient traffic flow. The PD 6500*i* traffic counter tracks the number of patrons that have passed through the detector, the number of alarms and calculates the alarm percentage.

Security

All settings are secured with a key lock and 3 levels of user access. Further security is accomplished with a cabinet lock which prevents unauthorized access to cables, connectors and circuit boards.

Controls/ Displays

The PD 6500*i* utilizes backlit Liquid Crystal Displays (LCD's) and LED bar graphs for continuous on-line operating status and self-diagnostic reporting. All controls and settings are simplified with menu selections and touchpad controls.

Optional Accessories

Optional accessories include a Battery Back-Up Module for emergency or remote use, Desktop Remote Control, a wheel assembly for easy portability, adhesive floor mounts and a computerized Control Monitor Analyzer (CMA) interface module. CMA software provides network capabilities for remote access to data collection, alarm statistics and real-time "detector events" for monitoring and / or analyzing.

Note: This revised manual describes several new features which are available with software versions 2.23–1.37 or greater.

SEC.RU | Короткий путь к информации Скачано с sec.ru

1.1 TECHNICAL SPECIFICATIONS

1.1.1 DIMENSIONS

• Passage Interior:	Width: 30” (0.76m)	Height: 80” (2m)	Depth: 23” (0.58m)
• Overall Exterior:	Width: 35” (0.9m)	Height: 87” (2.2m)	Depth: 23” (0.58m)
• Shipping:	Width: 35.5” (0.9m)	Height: 92” (2.3m)	Depth: 6.5”(0.17m)
• Shipping Weight:	165 lbs (74 kg)		

1.1.2 OPERATING CONDITIONS

Temperature: -4ºF (-20ºC) to +158ºF (70ºC)
Humidity: Up to 95% non-condensing.

1.2 REGULATORY INFORMATION

The PD 6500*i* meets or exceeds industry safety and electromagnetic compatibility (EMC) standards and conforms to international directives (CE approved).

The PD 6500*i* is made of scratch and mar resistant laminate with resilient end caps, a control panel and heavy-duty aluminum crosspiece. A smooth, rounded corner design ensures no puncturing, cutting or tearing of the skin or clothing or otherwise causing bodily injury. A key lock panel protects critical circuitry, wires, cables, data cables and power connectors to prevent tampering or injury.

1.2.1 ELECTRICAL SAFETY

The Garrett PD 6500*i* has been tested and found to comply with:

- Canadian Standard - CAN / CSA-C22.2 No. 1010.1 and CAN / CSA- C22.2 No. 1010.1B-97 Safety Requirements for Measurement, Control and Laboratory Use, Part 1: General Requirements.
- United States Standard - UL 3101-1 1993 Electrical Equipment for Laboratory Use, Part 1: General Requirements.
- International Standard (CB Certification) - IEC 610010-1 Safety Requirements for Electrical Equipment for Measurement, Control and Laboratory Use, Part 1: General Requirements.
- OSHA Regulation 1910.147 De-energizing Equipment.

1.2.2 MAGNETIC FIELD SAFETY

The Garrett PD 6500*i* has been tested and found to comply with:

- AICGH-0302 (1996), Sub-Radio Frequency (30 kHz and below) Magnetic Fields.
- Institute of Electrical and Electronic Engineers (IEEE) C95.1-1999, “IEEE Standard for Safety Levels with Respect to Human Exposure to Radio Frequency Electromagnetic Fields, 3 kHz to 300 GHz.”
- International Commission for Non-Ionizing Radiation Protection (ICNIRP), “Guidelines for Limiting Exposure to Time-Varying Electric, Magnetic and Electromagnetic Field (Up to 300 GHz).”
- NBS Special Publication 500-101, “Care and Handling of Computer Magnetic Storage Media.”

SEC.RU | Короткий путь к информации Скачано с sec.ru

- Canada Health and Welfare: Performance Standards (Walk-Through), RPB-SC-18 section 3.2.2 which addresses the issue of electromagnetic effects to cardiac pacemakers.

- Occupational and Safety Health Administration: Radiation Protection Guide, CFR 1910.97 section (2) i.

- National Institute of Law Enforcement and Criminal Justice: Standards for Walk-Through Metal Detectors for use in Weapons Detecting NILECJ-STD-0601.00 Section 4.11.

- OSHA Regulation 1910.47 (a) (2) (i) Non-Ionizing Radiation.

1.2.3 ELECTROMAGNETIC COMPATIBILITY

The Garrett PD 6500*i* has been tested and found to comply with:

- FCC 47 CFR, Part 15, Subpart B: 1998, Class A for Power Line Conducted Emissions.

- FCC 47 CFR, Part 15, Subpart B: 1998, Class A for Radiated Emissions.

- EN 55022: 1998, Radiated Emissions for Class A Information Technology Equipment.

- EN 55024: 1998, for Immunity.

1.2.4 PHYSICAL

The Garrett PD 6500*i* has been tested and found to comply with:

- IEC 68-2-27, 29 for Shock and Bump.

- ASTM F1468-95 Section 5.4 Tip Over (requires anchoring).

- IEC 529 IP55 for protection from water and foreign objects.

1.2.5 PRODUCT PERFORMANCE

- The PD 6500*i* is Transportation Security Administration (TSA) qualified to meet the new Enhanced Metal Detector (EMD) specification for walk-through metal detectors.

- The Garrett PD 6500*i* has been tested and found to comply with:

- Federal Aviation Administration (FAA) three-gun test.

- National Institute of Law Enforcement and Criminal Justice Standards #0601.00, levels 1-5.

SEC.RU | Короткий путь к информации Скачано с sec.ru

1.3 DESCRIPTION OF CONTROLS, DISPLAYS AND ALARMS

1.3.1 DESCRIPTION OF VISUAL CONTROLS AND DISPLAYS

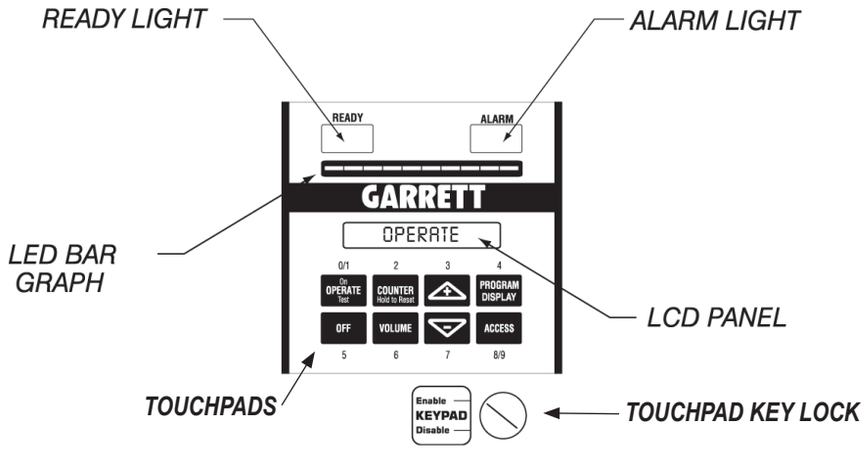

Figure 1-1

1.3.1.1 BAR GRAPH

The LED bar graph is comprised of a series of lights. The bar graph light activity represents the level of metal detection intensity occurring within the archway. The detection intensity is dependent upon the quantity and composition of the metallic object(s), and the program and sensitivity settings of the unit.

The bar graph also indicates the presence of electrical interference and interference from nearby moving metallic objects.

1.3.1.2 READY LIGHT

The green READY light appears when power is on and the PD 6500*i* is ready to detect metal. The ready light must be illuminated before a patron is permitted to enter the walk-through. A rapidly blinking ready light is an indication that AC power has been disconnected and the unit is operating on the optional battery backup system.

1.3.1.3 BACKLIT LCD

The LCD is a visual display located in the overhead panel. The LCD reports calibration and operational information, including program and sensitivity settings, operator functions and fault indication. The LCD displays all self-prompting regulation and control functions as well as traffic count information.

1.3.1.4 ALARM LIGHT

The red ALARM light is a visual indication of an alarm when the unit detects a targeted amount of metal within the walk-through according to the program and base sensitivity settings. When a target is detected the alarm light appears even if audio volume is off.

1.3.1.5 TOUCHPAD KEY LOCK

Disables touchpad to prevent tampering.

SEC.RU | Короткий путь к информации Скачано с sec.ru
PDi User Manual.indd 9 4/12/2007 3:43:41 PM

1.3.1.6 TOUCHPADS

Use to turn unit on, access and adjust setup and programming. Function of touchpad depends upon key lock and user access level.

1.3.1.6.1 *OPERATE (ON / TEST)*

The OPERATE touchpad is used to turn the PD 6500*i* on. The unit will be ready to operate within ten seconds. Activate the manual self-test at any time by pressing OPERATE.

1.3.1.6.2 *OFF*

The OFF touchpad is used to turn the PD 6500*i* off, ensuring that all of the information and settings are stored in memory until the detector is ready to resume full operation.

1.3.1.6.3 *COUNTER*

The COUNTER touchpad is used to obtain an automatic update on the traffic count that appears on the LCD. The counter also reports alarm statistics such as alarm count and alarm count %. If operator access is enabled, the counter may be reset by pressing the COUNTER touchpad for approximately ten seconds.

1.3.1.6.4 *VOLUME*

The VOLUME touchpad is used to access the volume control of the audio alarm.

1.3.1.6.5 *(+) and (–)*

The plus (+) and minus (–) touchpads are used to change numerical settings, activate certain on/off functions and adjust the volume of the audio alarm.

1.3.1.6.6 *PROGRAM*

The PROGRAM touchpad enables the user to view the current program and base sensitivity settings on the LCD.

1.3.1.6.7 *ACCESS*

The ACCESS touchpad is used to initiate the log-in process and to scroll through menu items.

1.3.1.7 PACING LIGHTS

Pacing lights located on side panels of the entrance side indicate whether or not a patron may enter the walk-through. The green “proceed” ( ) symbol indicates the unit is ready for a patron, while the red “wait” ( ) symbol indicates the patron should wait. *(See Figure 1-2.)*

SEC.RU | Короткий путь к информации Скачано с sec.ru

1.3.1.8 PINPOINT LIGHTS

Pinpoint lights are located on the exit side of each panel and provide location information using 11 vertical and 3 horizontal positions for a total of 33 pinpoint areas. These lights help the operator to identify the precise location of a metal object within the walk-through, whether it is on the left, right or in the center of the body, from head to toe. *(See Figure 1-3.)*

ENTRANCE

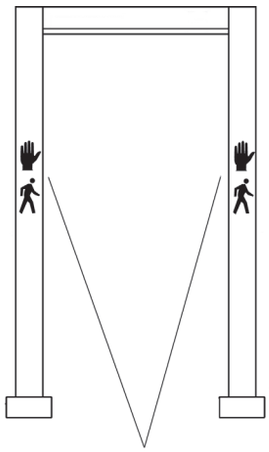

LED pacing lights
(red=wait; green=walk)

Figure 1-2

EXIT

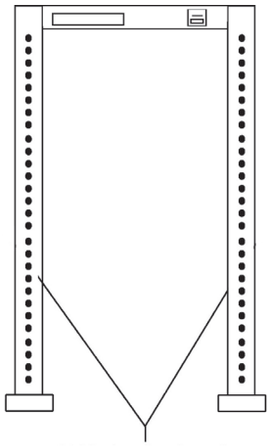

LED pinpoint detection
lights (red)

Figure 1-3

1.3.2 DESCRIPTION OF AUDIO RESPONSES

1.3.2.1 TARGET ALARMS

The steady, single pitch audio alarm indicates that a target has been identified according to the program and sensitivity settings.

1.3.2.2 WARBLE ALARM

A quickly alternating two-tone alarm occurs when a very large metal object, such as a wheel-chair, piece of furniture or metal container, moves through or near the PD 6500*i* and overloads the detector's circuits. The warble sound prompts the operator to correct the situation before allowing anyone to pass through the metal detector.

1.3.2.3 TAMPER ALARM

When the ACCESS touchpad is pressed, the detector beeps for about ten seconds until a valid user is selected and a numeric access code is entered. If a person or object passes through the archway during this time, a loud low-toned alarm will activate. If an invalid code is entered, the message: ACCESS DENIED appears on the LCD, and an audible tamper alarm momentarily sounds and normal operation resumes.

2. INSTALLATION

2.1 SITE SELECTION & REQUIREMENTS

Before choosing a site for the PD 6500*i* Walk-Through Metal Detector, it is important to consider the volume and throughput requirements of patron traffic, space availability and overall environmental conditions. The PD 6500*i* must always be installed on a level, stable floor. The following site requirements are provided as a guide to successful installation.

SEC.RU | Короткий путь к информации Скачано с sec.ru

Garrett Metal Detectors has years of experience designing, installing and operating security screening checkpoints. Garrett's experience ranges from very small—one and two detector checkpoints—to very large, 900-detector Olympic operations. Garrett always prefers to work closely with its clients when designing checkpoints. Every client has a unique situation and needs a somewhat customized solution. Garrett is happy to assist in designing and implementing these solutions. This section is intended to provide general in formation for designing security screening checkpoints.

2.1.1 ELECTRICAL POWER

Electricity is a critical element for successful, trouble-free installations. Garrett metal detectors require 100-240 Volt, 50/60 Hertz power, and draw less than 2 amperes each. Consequently, "power load" is minimal for any group of detectors.

Due to their pulse induction technology, it is required that all PD 6500*i* units within 25' to 100' of each other be connected to the same phase of the AC power source; otherwise, a Master / Slave configuration must be used. *(See Section 2.3.)*

Connecting to a single power source can be easily accomplished using extension power cords connected to the same outlet if existing power does not, or cannot, meet this requirement. An optional 10' power cord jumper is available to simplify this connection. *(See Section 8.2.)*

Garrett metal detectors are very versatile and can be connected to power from either the top or bottom of either side. This makes connecting power very convenient and gives users more options when designing their sites. When "running" power along the ground it is recommended that cords be secured to the ground using highly visible industrial tape or cable trays. This ensures that the cord is visible to patron traffic and prevents personal injury as well as equipment damage. When "running" power overhead it is recommended that power cords be suspended above the detector. This keeps the cord accessible for maintenance, but out of reach of regular traffic.

2.1.2 PHYSICAL SITE

Appropriate selection and preparation of a site is paramount for successful, efficient and effective checkpoint screening operations. The site must be flat, level and free from obstructions. The surface must be solid and free from any vibration or movement. Most indoor surfaces are already adequate. Outdoor surfaces should be asphalt or concrete; wooden or metal platforms can NOT be used. The site should be free from running or standing water and should provide protection from weather elements. An industrial, four-walled tent is the best way to provide shelter from the weather elements when outdoors. The tent must be strong enough to repel rain, snow, sleet and a fair amount of wind.

2.1.3 CHECKPOINT CONFIGURATION

A site must also allow for efficient spacing and configuration of metal detectors. If a site is too small the operation of the checkpoint becomes "choked" and "bottlenecks" form. This severely hampers the flow of "traffic" through a checkpoint and can be troublesome when trying to operate within time constraints. If a site is too big it becomes difficult to oversee the checkpoint, and valuable space is wasted. As a general rule a rectangular block of space,

SEC.RU | Короткий путь к информации Скачано с sec.ru
PD6 User Manual.indd 12 4/12/2007 3:43:42 PM

8' wide and at least 10' deep, should be reserved for every checkpoint lane. There are many ways to arrange detectors at a checkpoint. Garrett has found the following configurations to work best. Please refer to the following illustrations.

See Section 2.3 for additional equipment spacing requirements and set-up information.

SUGGESTED SINGLE LANE CONFIGURATION

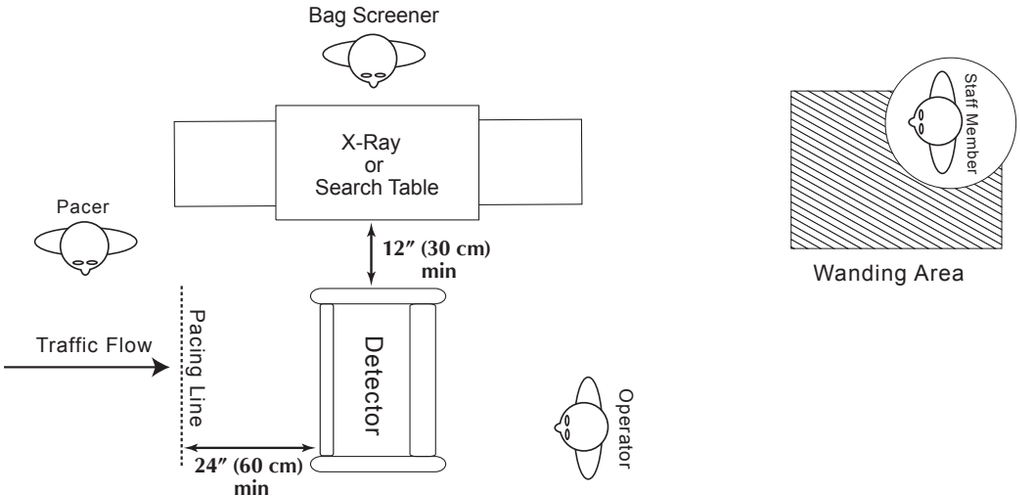

SEC.RU | Короткий путь к информации
Скачано с sec.ru
PDi User Manual.indd 13 4/12/2007 3:43:42 PM

SUGGESTED MULTI-LANE CONFIGURATION–A

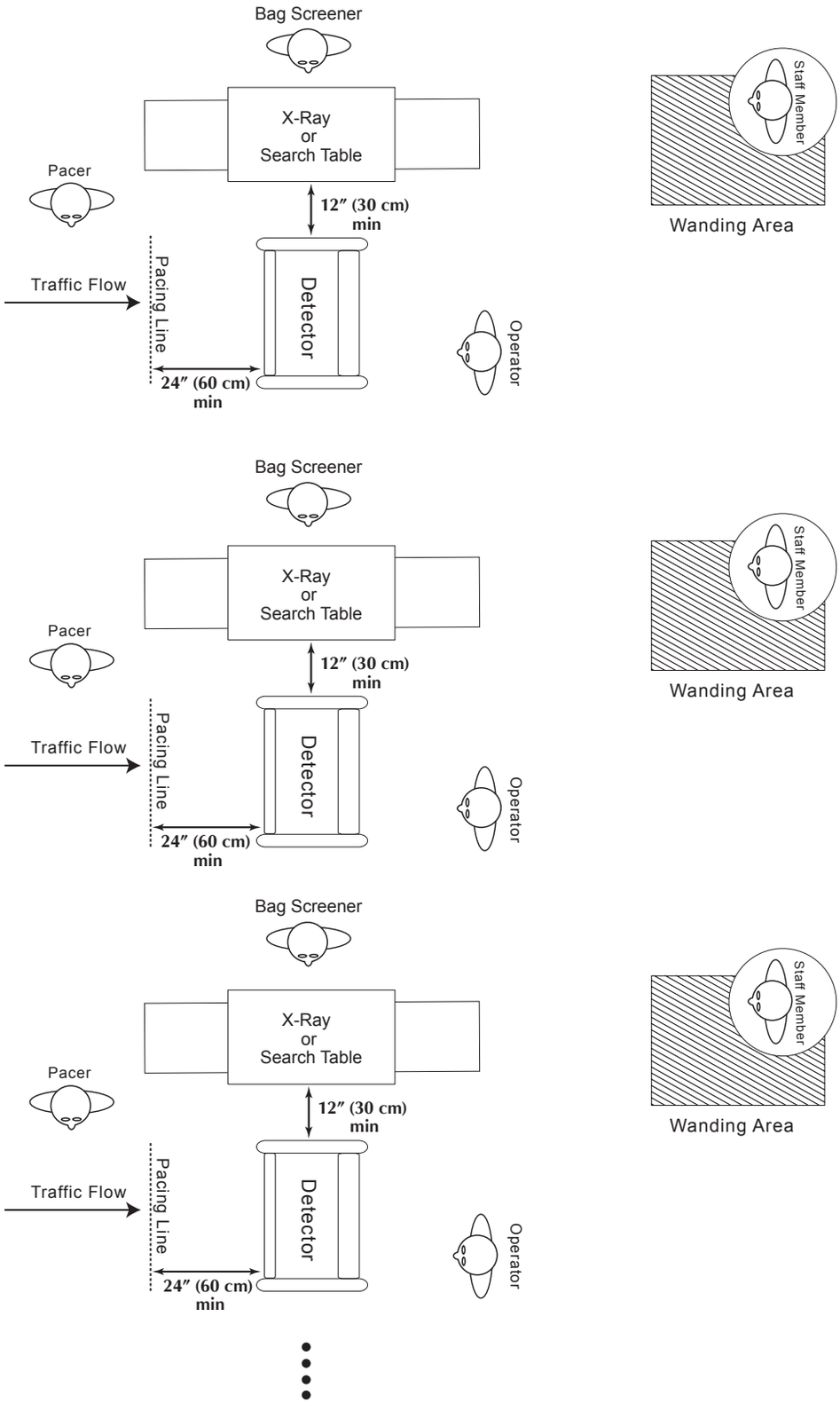

SEC.RU | Короткий путь к информации Скачано с sec.ru

SUGGESTED MULTI-LANE, BACK-TO-BACK CONFIGURATION–B

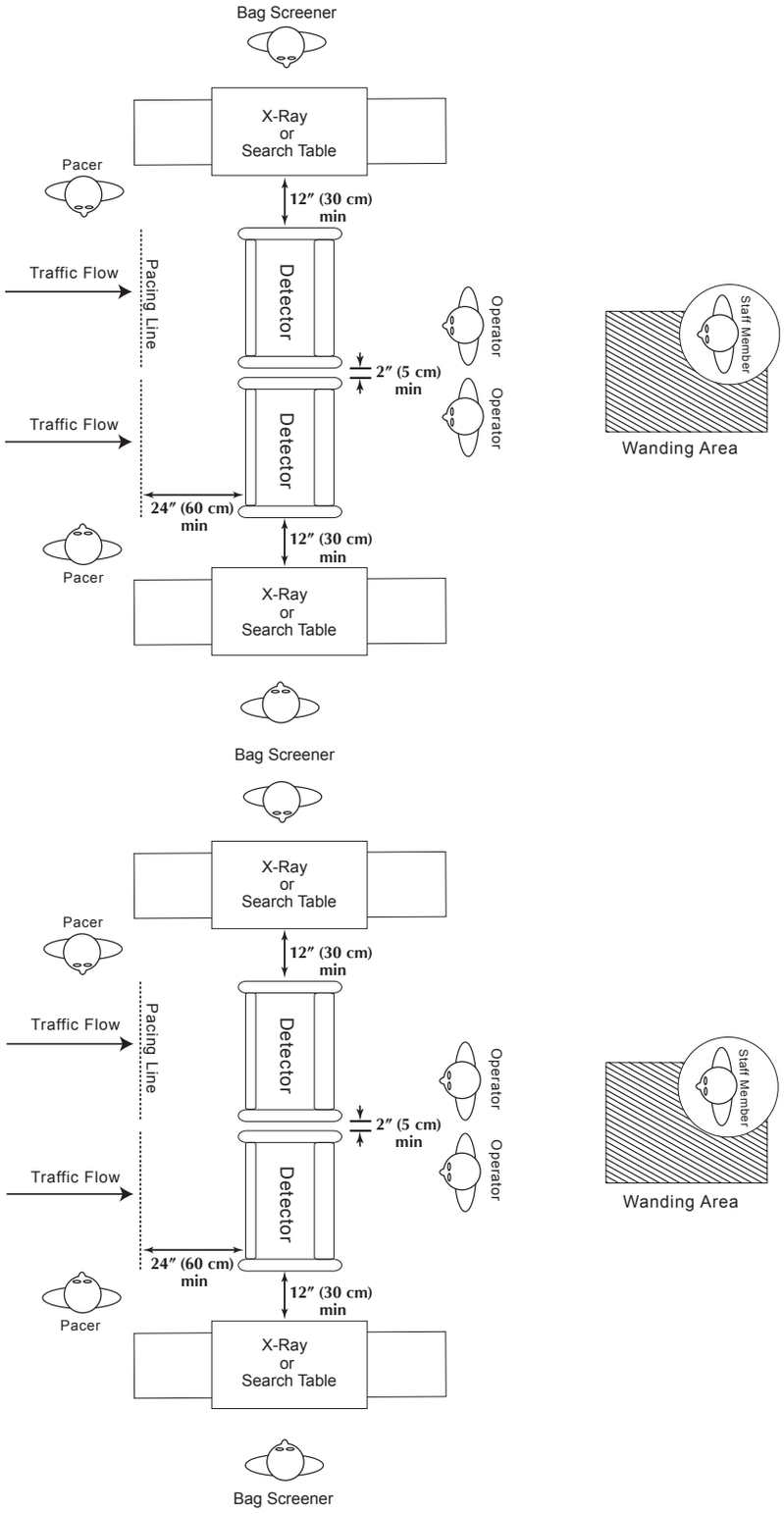

SEC.RU | Короткий путь к информации Скачано с sec.ru
PDi User Manual.indd 15 4/12/2007 3:43:42 PM

2.1.4 INTERFERENCE

Many variables can potentially cause interference with any metal detector operation. However, there are some major variables which may be identified and addressed during site selection. Electrical sources of interference including generators, transformers, electrical panels, etc., should be kept as far away as possible. Large moving or stationary metallic objects such as revolving doors, elevators, garbage cans, barricades, etc., should be kept as far away as possible. Search tables and personnel should be placed a minimum of 6” from the detector. X-ray machines and other complementary screening equipment should be placed a minimum distance of 12” from the detector.

See section 6.1 for information about identifying and resolving sources of interference.

2.2 UNIT ASSEMBLY

Assemble the unit and position at the checkpoint location, connect to power, set desired program / operating procedures, check for interference and perform necessary tests.

2.2.1 ASSEMBLY

The enclosed instructional video provides detailed assembly instructions.

1. Verify that the following contents are included:

- Panel “A”
- Panel “B”
- Detection Unit (Head)
- Crosspiece (Support Brace)
- 2’ AC Jumper Cord
- 10’ Power Cord
- Eight 1/4-20x3” Screws
- Eight Finishing Washers

Accessories:

- User Manual
- Instruction DVD
- Pocket Item Container (Coin Tray)
- Stabilizing Plates (Optional)

2. Arrange the major components as shown in Figure 2–1.

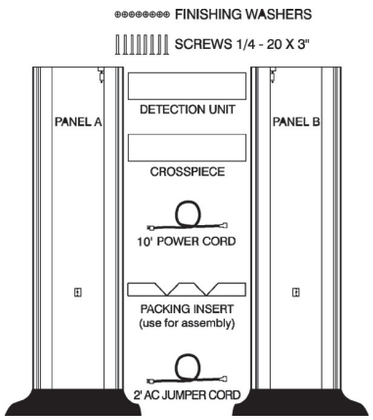

Figure 2-1

SEC.RU | Короткий путь к информации Скачано с sec.ru

3. Place the packing insert on floor as shown in Figure 2–2.
Lay detection unit (with touchpad panel facing down) on packing insert. Connect detection unit to panels A and B using four screws and finishing washers. Do not tighten!

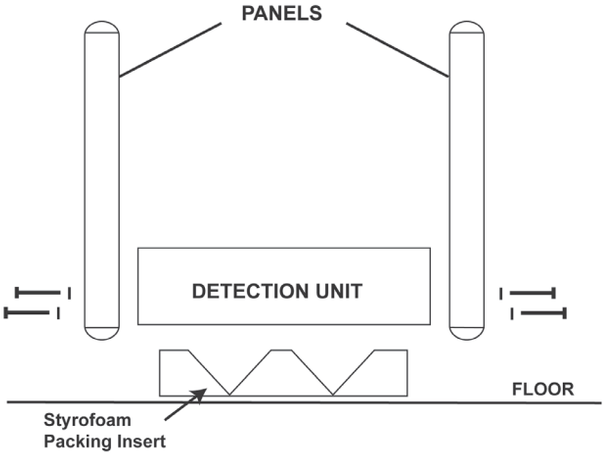

Figure 2-2

4. Connect Panel Cables
Open the door of the detection unit. Connect cables A and B into the corresponding panels. *(See Figure 2–3.)*

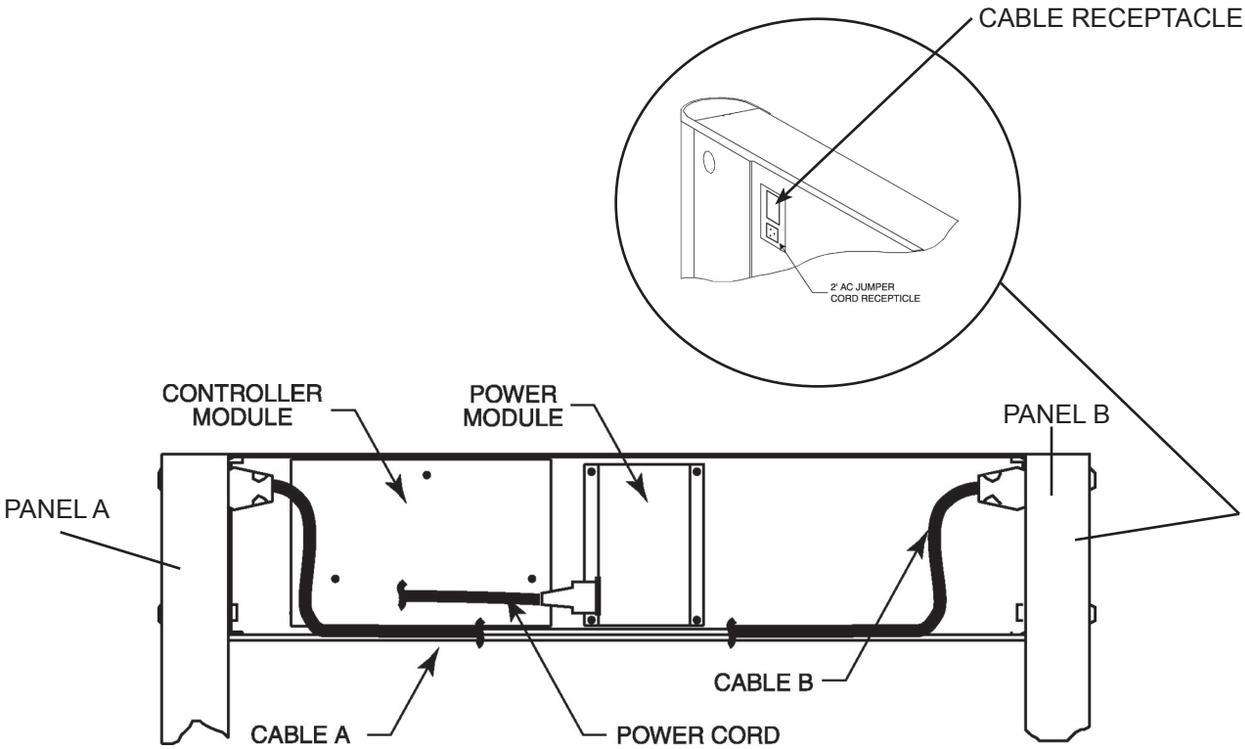

Figure 2-3

SEC.RU | Короткий путь к информации Скачано с sec.ru
PDi User Manual.indd 17 4/12/2007 3:43:45 PM

5. Determine the location of the AC power outlet and select a power connection means. If power is to be supplied from an overhead source, remove the rubber access plug in the top of the detection unit, feed the power cord (or the 2' AC jumper cord if required) into the detection unit and plug directly into the power module.

If power is to be supplied at floor level, determine the panel that is nearest the power outlet. Within the Detection Unit, plug in the 2' AC jumper cord from the selected panel to the power module. Retrieve the power cable at the bottom of the entrance side of the selected panel through the 1½ inch diameter opening in the bottom of the boot. Slip the power cord into the clamp, as shown in Figure 2-4, to prevent pinching and abrasion when the unit is set upright. Secure the connection with electrical tape or other means if required.

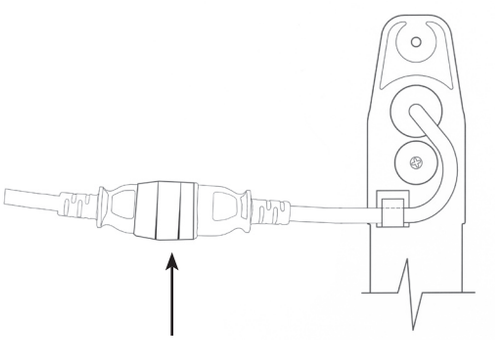

NOTE: Wrap plugs with electrical tape if needed.

Figure 2-4

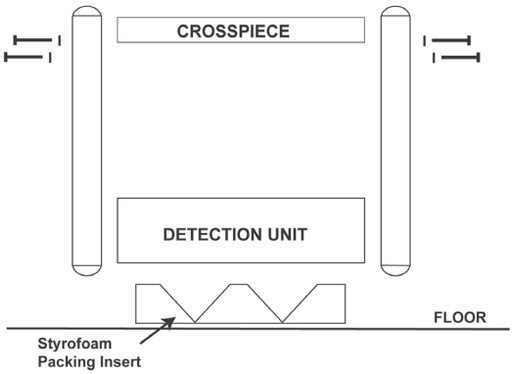

Figure 2-5

6. Use the four remaining screws and washers to attach the crosspiece to the two panels. *(See Figure 2–5.)*

7. If optional adhesive floor mounts are to be used, attach the mounting plates to side panels. Do not remove adhesive protectors at this time. Follow instructions provided in the mounting kit.

8. Use two or more people to lift the PD 6500*i* to a vertical position and move to desired location. *(See Figure 2–6, below.)*

Figure 2-6

SEC.RU | Короткий путь к информации Скачано с sec.ru

9. Ensure the PD 6500*i* is physically stable and does not sit on top of power cord.
10. Tighten all screws with a screwdriver.

2.2.2 POWER CORD WIRING DESCRIPTION

The PD 6500*i* (Model 11684xx) includes a standard American ground power cord. To replace or remove plug, or to hard wire to an AC junction box, use:

Green	To Ground
Black	To line Hot
White	To line Neutral

The PD 6500*i* (Model 1168420) (INTERNATIONAL) includes a European power cord. To replace or remove plug, or to hard wire to an AC junction box, use:

Green/Yellow	To Ground
Brown	To line Hot
Blue	To line Neutral

2.3 MULTIPLE WALK-THROUGH SITE INSTALLATION

For multiple walk-through metal detector (WTMD) operation (units within 25’ to 100’ of each other depending on sensitivity setting), certain power requirements and installation adjustments are necessary to avoid crosstalk (interference) among units.

There are several ways to successfully install multiple walk-throughs in close proximity with no crosstalk. The following examples are aimed to help the installer determine an appropriate method for eliminating crosstalk.

2.3.1 CASE 1

Description:

• All detectors are PD 6500*i*s. *(See Figure 2–7.)*
• All detectors are connected to the same AC-Line Phase.

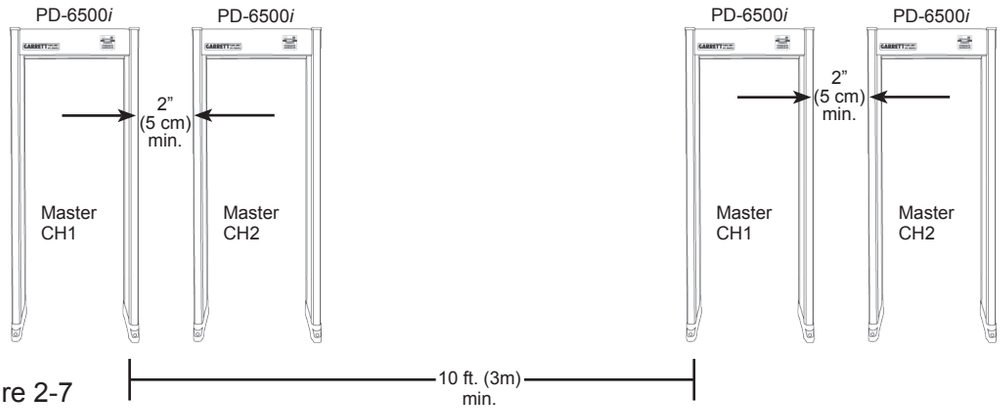

Figure 2-7

Procedure:

1. Set all PD 6500*i*s synchronization to Sync: MASTER.
2. Set end unit to CHANNEL 1.
3. Set next unit to CHANNEL 2.
4. Set next unit to CHANNEL 1.
5. Repeat alternating pattern for channels 1 and 2 for any additional PD 6500*i*s.

SEC.RU | Короткий путь к информации Скачано с sec.ru

2.3.2 CASE 2

Description:

- All detectors are PD 6500*i*s. *(See Figure 2–8.)*
- Detectors are connected to different AC-Line Phases or operating from battery back-up.

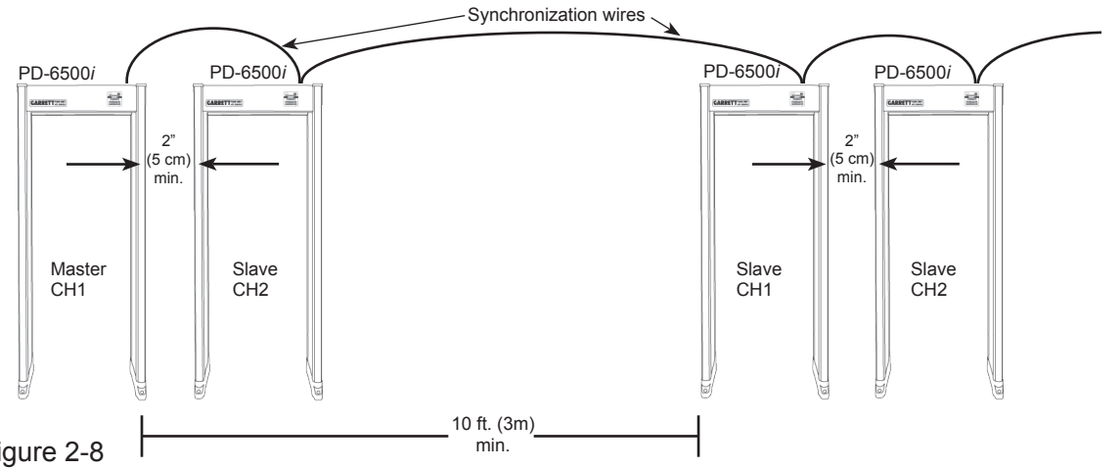

Figure 2-8

Procedure:

1. Switch units off and disconnect PD 6500*i*s from power line.
2. Open access door of detection unit.
3. Remove the three screws that hold controller cover. *(See Figure 2-9.)*
4. Use synchronization wire (18 to 24-gauge, 2 conductor) between units; connect to pins 1 and 2 as shown in Figure 2-10 and on inside of controller cover. Connector block is a plug in and may be removed to facilitate connection of the wires.
5. With the exception of the end units, the SH1 jumper, located on the controller board assembly must be removed. *(See Figure 2-10.)*
6. Replace cover and reconnect power.
7. Set the end unit (i.e., first or last in a series of PD 6500*i*s) synchronization to MASTER CHANNEL 1 and make sure it is always connected to either AC power or battery power.
8. Set all other units synchronize to SLAVE.
9. Set the remaining units alternately to CHANNEL 2 and CHANNEL 1 as shown.
10. Repeat alternating pattern of channels 1 and 2 for any additional PD 6500*i*s.

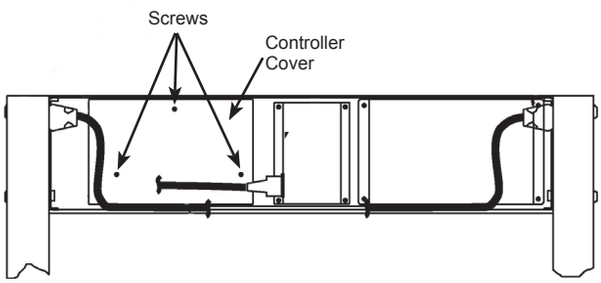

Figure 2-9

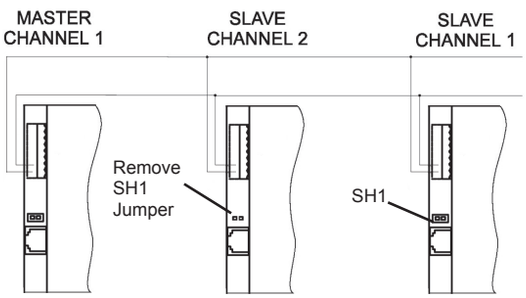

Figure 2-10

SEC.RU | Короткий путь к информации Скачано с sec.ru

2.3.3 CASE 3

Description:

• A combination of PD 6500*i*s and other Garrett walk-through metal detectors.

Procedure:

• This procedure is the same as Case 1 or Case 2 above. The only difference is that with other Garrett models, you may need to use Channel “A” and Channel “B” rather than Channel “1” and Channel “2”.

2.3.4 CASE 4

Description:

• PD 6500*i* walk-through in use with **non-Garrett walk-through metal detectors**.
(See Figure 2-11.)

• ***Note:*** If possible, exchange detectors from other checkpoints so that there is only one brand of detector at each checkpoint. If the PD 6500*i* must operate with another brand of walk-through metal detector, the following procedure will help ensure successful operation.

• ***Note:*** At distances between 20 and 40 inches (0.5 to 1 m) it may or may not be necessary to switch off a transmitter panel of the PD 6500*i*. Leave both transmitters on unless interference is observed after adjusting M Filter and Frequency. Adjustments should be made after the detectors are set to the desired detection sensitivities. See Section 3.5.30 for more detail.

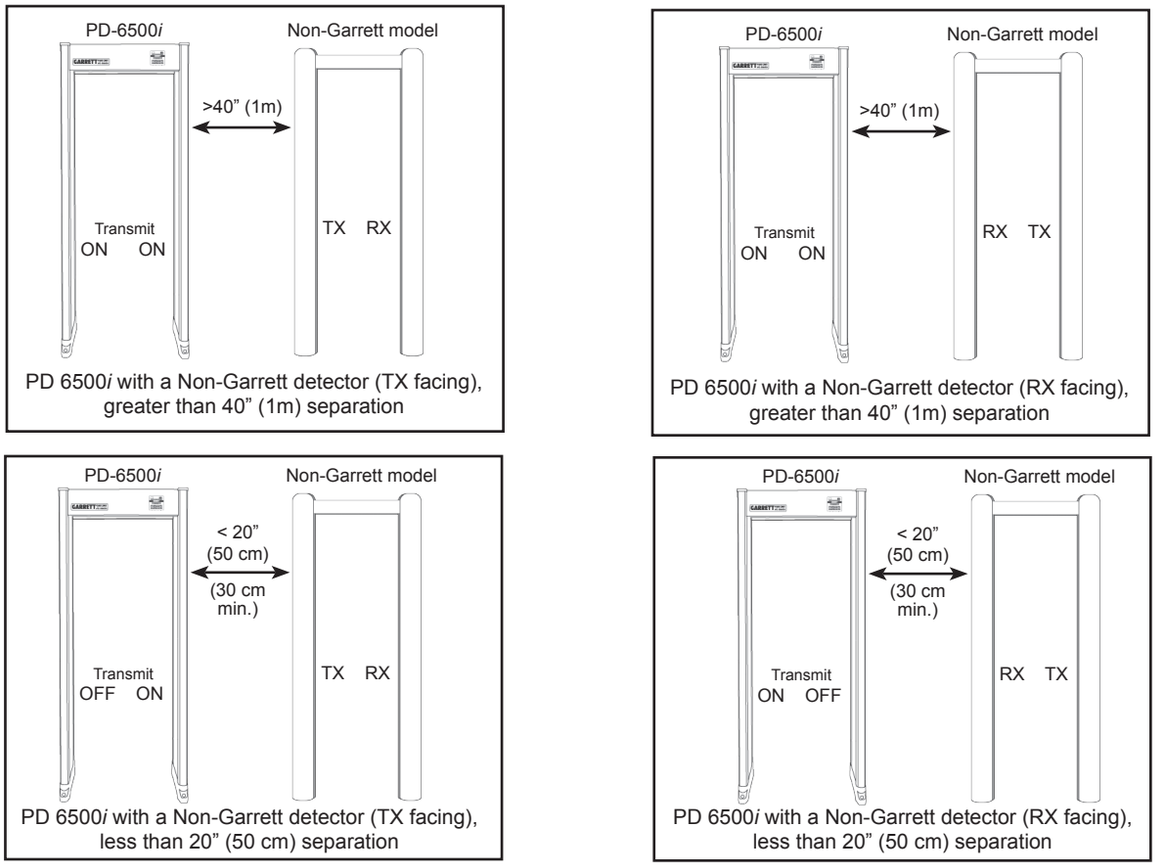

Figure 2-11

SEC.RU | Короткий путь к информации Скачано с sec.ru
PDi User Manual.indd 21 4/12/2007 3:43:51 PM

Procedure:

1. Whenever possible, attempt to separate the PD 6500*i* from non-Garrett walk-through metal detectors as much as possible. Doing so will significantly reduce interference between differing brands of detectors.

2. Switch M Filter OFF and Line Sync OFF. *(See Section 3.5.27 and 3.5.29.)*

3. Select the appropriate transmit configuration based on the four diagrams shown in Figure 2–11. *(See Section 3.5.30.)*

4. Determine quietest Frequency. *(See Section 3.5.28.)*

2.4 STABILIZING

The PD 6500*i* may be bolted to the floor using the holes in the unit's boot or adhesive floor mounting plates are available for securing the PD 6500*i* to the floor without drilling.

Stabilizing the unit is particularly important in locations where the floor slopes or tilts, disorderly crowds, high winds, etc., are possible. It is recommended that the unit be tested for functionality and interference prior to permanent mounting.

2.5 INSTALLATION COMPLETION

Complete the installation of the PD 6500*i* by:

1. Connecting the unit to a power source
2. Selecting the operating setting
3. Establishing the required program and settings
4. Checking for interference and verifying proper operation

3. CONTROLS AND ADJUSTMENTS

There are three access levels of security clearance for the PD 6500*i*.

1. Operator Level: The Operator can view the Program, Base Sensitivity, Patron Count, Alarm Count, Alarm %, Random Alarm % and Sequence settings as well as alter Volume settings and reset the Counter without a User Code. See Monitor Functions *(Table 3-1)*. At any time the Administrator can deny the Operator access to these Monitor Functions.

Press the PROGRAM touchpad to view Program and Base Sensitivity. Press the COUNTER touchpad to view Patron Count, Alarm Count, Alarm % and Random Alarm %. Press and hold the COUNTER touchpad to reset the Counter to zero (0). Press the VOLUME touchpad to view the volume setting; then press the + / - touchpad to increase or decrease the volume setting.

2. Supervisor Level: The Supervisor requires a user code and may require a key to view and adjust authorized functions. *(See Table 3-1 and Section 3.5 for more information.)*

3. Administrator Level: The Administrator requires a user code and may require a key to view and adjust authorized functions. *(See Table 3-1 and Section 3.5 for more information.)*

3.1 MENU TABLE

Table (3-1) on page 23 lists access levels and menu functions.

SEC.RU | Короткий путь к информации Скачано с sec.ru

TABLE 3-1

	Function	Operator	Supervisor	Administrator
	Default Access Code	Not Required	1234	5678
	Power	OFF / ON	OFF / ON	OFF / ON
	Self Test	View	View	View
Monitoring	Program	View	-	-
	Base Sensitivity	View	-	-
	Volume	0-12	0-12	0-12
	Patron Count	View	View	View
	Alarm Count	View	View	View
	Alarm %	View	View	View
	Random Alarm %	View	View	0 - 50%
	Sequence	View	View	View
	Reset Counters	Yes	Yes	Yes
Preferences	Tone	-	-	1-9
	Pacing Lights	-	-	ON / OFF
	Zone Lights	-	-	OFF, 2, 3, 4 Sec
	Alarm Time	-	-	1, 2, 3, 4 Sec
	I / R Analysis	-	ON / OFF	ON / OFF
	Language	-	-	Select
Programming	Rx Balance	-	-	View
	Synchronization	-	-	Master/Slave
	Channel	-	-	1, 2, A, B
	Program	-	Select	Select
	Base Sensitivity	-	1-200	1-200
	Alarm Level	-	View / Reset	View / Reset
	Zone 1 Boost	-	-	+ / - 64%
	Zone 2 Boost	-	-	+ / - 15%
	Zone 3 Boost	-	-	+ / - 15%
	Zone 4 Boost	-	-	+ / - 15%
	Zone 5 Boost	-	-	-63 – +192%
	Zone 6 Boost	-	-	-63 – +192%
	Relay	-	-	NO / NC
	Bar Graph	-	-	Normal/Diagnostic
	Detection Speed	-	-	Normal/Expanded
	M Filter	-	-	ON / OFF
	Frequency	-	-	0 - 2300
	Line Sync	-	-	ON / OFF
	Transmit Configuration	-	-	ON/ON, ON/OFF, OFF/ON, OFF/OFF
Administration	Operator Enable	-	-	OFF / ON W-key / ON
	Alter Code 1	-	-	YES
	Alter Code 2	-	-	YES

3.2 POWER ON / OFF

When you press the OPERATE touchpad for the first time, the READY light appears and the LCD displays the message, GARRETT SECURITY. Press OPERATE again, and the unit will report critical settings and self-test results. The LCD displays the following information, in sequence:

LCD MESSAGE	DEFINITION
1. S/N ########	serial number
2. VER ###	software version
3. SYNC MASTER or SLAVE	synchronization
4. CHANNEL 1 or 2	channel selection
5. PROG: XXXXXXXX	program selection
6. BASE SENSE: ###	base sensitivity setting
7. SELF-TEST...	self test in progress
8. BATT POWER XX%	strength of battery if in use
9. SELF TEST OK	self test reveals no problems
10. OPERATE	resume operate mode

SEC.RU | Короткий путь к информации Скачано с sec.ru

3.3 SELF TEST

The self-test feature within the unit is in constant operation and will reveal “critical failures” instantaneously. Press the OPERATE/TEST button to display the self-test results on the LCD screen. Should the self-test reveal a problem, a “failure” message will appear (e.g., SYNC FAIL; Refer to Table 6.2 for a list of possible failures and remedies). If the unit is in 24 hour, 7-day a week operation, a manual self-test should be conducted at least once every 24 hour period to check for non-critical failures. The operator should inform the supervisor of any problems that appear on the LCD.

3.4 SUPERVISOR AND ADMINISTRATOR LEVEL ACCESS

To log in, the user must press the “ACCESS” touchpad. The unit will prompt the Supervisor or Administrator to enter their password.

3.5 DETECTOR SETTINGS

Each user may scroll through the menu items assigned to their particular access level. Some menu items are available as “view only”. The PD 6500*i* will not allow a user to change any of the “view only” items. To scroll the menu items, use the ACCESS touchpad; to scroll in the reverse order, press the PROGRAM touchpad.

3.5.1 ALARM VOLUME

VOLUME, shown with the current volume setting, appears on LCD. The user may use the + / – touchpads to increase or decrease the alarm volume from 0 - 12.

Press ACCESS for the next adjustment or OPERATE to resume normal operation.

3.5.2 PATRON COUNTER

A built-in and user resetable traffic counter records the number of patrons who pass through the walk-through. This is a “view only” menu item. To reset the counter to zero, refer to section 3.5.9. The Patron Counter will roll over to 0 after 65535.

COUNT, indicates the number of patrons who have passed through the detector.

Press ACCESS for the next menu item or OPERATE to resume normal operation.

3.5.3 REAL ALARMS COUNT

This is a “view only” menu item that displays the number of alarms that have occurred. ***Note:*** The Real Alarms count does not include alarms produced by the Random Alarm feature. The Real Alarms count automatically resets to zero when the patron count is reset or rolls over.

Press ACCESS for the next menu item or OPERATE to resume normal operation.

3.5.4 REAL ALARM %

This is a “view only” menu item that displays the percentage of real alarms divided by patron counts. The Real Alarm % automatically resets to zero when the patron count is reset or rolls over.

Press ACCESS for the next menu item or OPERATE to resume normal operation.

SEC.RU | Короткий путь к информации Скачано с sec.ru

3.5.5 RANDOM ALARM %

This feature provides the ability to randomly alarm on a selected percentage of non-alarming persons. The Random Alarm rate is adjustable from 0 to 50% using the + or – touchpads. If set to 10%, for example, the detector will automatically alarm on 10% of the persons which would otherwise not have alarmed. The interval of these Random Alarms is randomly distributed among the non-alarming persons. Note: Random Alarms are not included in the Real Alarms count or Real Alarm %.

For Supervisor ACCESS level, this is a “view only” menu item that displays the current Random Alarm Setting.

Press ACCESS for the next menu item or OPERATE to resume normal operation.

3.5.6 SEQUENCE

SEQUENCE indicates the number of times the system has been accessed via password. This is a “view only” menu item.

Press ACCESS for the next menu item or OPERATE to resume normal operation.

3.5.7 RESET COUNTER

RESET COUNT allows the Patron and Alarm counts to be reset.

To reset counters to zero (0), press the + touchpad.

Press ACCESS for the next adjustment or OPERATE to resume normal operation.

3.5.8 AUDIO TONE

TONE, which indicates the current tone setting, appears on the LCD. The user may use the + / - touchpads to adjust the tone from 1 (bass) to 9 (treble).

Press ACCESS for next adjustment or OPERATE to resume normal operation.

3.5.9 PACING LIGHTS

Pacing lights located on the side panels of the entrance side indicate whether or not a patron may enter the walk-through. The green proceed symbol ( ) indicates proceed and the red wait symbol ( ) indicates wait.

PACE LIGHTS, shown either ON or OFF, appears on the LCD. The user may use the + (pacing lights on) / - (pacing lights off) touchpads to set pacing lights.

Press ACCESS for the next adjustment or OPERATE to resume normal operation.

3.5.10 ZONE LIGHTS

The zone light duration may be adjusted to two, three, or four seconds, or turned off.

The user may press the + / - touchpads to scroll through the options:
ZONE LIGHT: OFF
ZONE LIGHT: 2 SEC
ZONE LIGHT: 3 SEC
ZONE LIGHT: 4 SEC.

Press ACCESS for the next adjustment or OPERATE to resume normal operation.

SEC.RU | Короткий путь к информации Скачано с sec.ru
PDi User Manual.indd 25 4/12/2007 3:43:52 PM

3.5.11 ALARM TIME

Sets the duration for audible alarms for 1, 2, 3 or 4 seconds. The user may use the + / - touchpads to adjust the time between 1-SEC to 4-SEC in 1 second increments.

Press ACCESS for the next adjustment or OPERATE to resume normal operation.

3.5.12 IR ANALYSIS

An infrared sensor has been designed to help prevent false alarms caused by nearby moving metallic materials such as wheelchairs, elevators, persons possessing metal, etc., and when outdoors by wind causing the unit to rock and then alarm. When IR Analysis is on, the above circumstances will not cause the detector to audibly alarm when no one is passing through the unit. When IR Analysis is off, the unit may audibly alarm under these circumstances even when no one is passing through the unit. Although useful, the IR Analysis is not required for operation and may be disabled if desired.

IR ANALYSIS, shown either ON or OFF, will appear on LCD. Press the minus (–) touchpad to disable or (+) touchpad to activate.

Press ACCESS for the next adjustment or OPERATE to resume normal operation.

3.5.13 LANGUAGE

LANGUAGE, which indicates the current language setting, appears on the LCD. If the user is authorized to change the language setting, the user may scroll through the language selections using the + / - touchpads. Choose from: English, Spanish, Turkish, German, Czech, French, Polish or Italian.

Press ACCESS for the next adjustment or OPERATE to resume normal operation.

3.5.14 RX BALANCE

RX BAL, which indicates the current RX balance number, appears on the LCD. RX balance refers to the balance level of the receiving antennas. Any number less than 50 is acceptable. A number greater than 50 will elicit the message, RX BAL #, and the pinpoint lights within the problem zone will illuminate. Should this occur, ensure that there is no large metal object adjacent to the PD 6500*i*. Then, ensure that the balance number has fallen below 50 and the corresponding pinpoint lights are off. *(Refer to section 6.2 for more help in resolving this issue if necessary.)*

Press ACCESS for the next adjustment or OPERATE to resume normal operation.

3.5.15 SYNCHRONIZATION

Synchronization is factory preset to MASTER. *(Refer to Section 2.3 for a more detailed explanation of synchronization.)*

SYNC MASTER, provides the PD 6500*i* with a self-generated synchronization from the power line.

SEC.RU | Короткий путь к информации Скачано с sec.ru

SYNC SLAVE synchronizes the PD 6500*i* from a secondary signal on the sync terminal located on the left edge of the transmitter controller board. SYNC, which indicates MASTER or SLAVE, will appear on LCD. The user may use the + / - touchpads to change sync to MASTER or SLAVE.

Press ACCESS for the next adjustment or OPERATE to resume normal operation.

3.5.16 CHANNEL

This feature enables multiple Garrett walk-through metal detectors to operate simultaneously in proximity. Use Channels 1 and 2 when two or more PD 6500*i*'s are operating near each other. *(See Section 2.3.)*

CHANNEL, shown with either 1 or 2, will appear on LCD. The user may use the + / - touchpads to change channel to 1 or 2.

Note: If Line Sync is set to OFF, Channel Adjustment has no effect on the detector.

Note: When using any other Garrett walk-through metal detectors with PD 6500*i*s, use channels A and B to coincide with other Garrett walk-through channels A and B.

Press ACCESS for the next adjustment or OPERATE to resume normal operation.

3.5.17 PROGRAM

PROG, which indicates the current program setting, will appear on the LCD. If the user is authorized to change the program, the user may scroll the menu of programs using the + / - touchpads to find the new program. Stop scrolling when the desired program appears on the LCD. *(Refer to Table 4-2 for a listing and description of programs.)*

Press ACCESS for the next adjustment or OPERATE to resume normal operation.

3.5.18 BASE SENSITIVITY

At higher sensitivity settings, smaller metal objects are detected. Conversely, at lower sensitivity settings, only larger metal objects are detected. Keep in mind that the sensitivity should be set high enough so that the smallest forbidden object (depending on your security needs) can be detected.

BASE SENSE, shown with the current base sensitivity setting, will appear on the LCD. If user is authorized to change the base sensitivity, the user may select from 1-200 using the + / - touchpads. To determine proper sensitivity setting, follow ALARM LEVEL setting instructions in section 3.5.19. *(See Section 3.5.20 for instructions on adjusting sensitivity of individual zones.)*

SPECIAL NOTE

A final decision on program and base sensitivity settings is the sole responsibility of the end user and must be determined by keeping the purpose of the security application in mind.

Press ACCESS for the next adjustment or OPERATE to resume normal operation.

SEC.RU | Короткий путь к информации Скачано с sec.ru
PDi User Manual.indd 27 4/12/2007 3:43:52 PM

3.5.19 ALARM LEVEL

Alarm level is a useful installation tool that helps you determine the lowest level of sensitivity required to activate an alarm for a particular metal object. This information can then be used to determine the desired level of sensitivity. Alarm Level is also very useful in evaluating interference and noise levels.

ALARM LEVEL, followed by the current alarm level reading, will appear on the LCD. The following are examples of the use of alarm level.

Using Alarm Level to determine required sensitivity:

1. Press the + (plus) touchpad to reset the reading. The reading should reset to greater than 190 (200 is ideal); otherwise, interference is present.
2. Ensure that you are metal free.
3. Hold the selected test object at the center of your waist.
4. Walk through the metal detector.
5. Note the new alarm level reading.
6. Change the test object's location and/or orientation.
7. Repeat steps one through six several times with the target in various locations until you are satisfied that you've performed enough tests.
8. Choose the highest reading produced by the test object.
9. Return to the base sensitivity menu item and enter the alarm level reading that you chose in Step 8 as the base sensitivity.
10. Confirm the new base sensitivity setting is appropriate by testing the selected test object at varying locations and orientations within the walk-through (alarms should occur with each pass), particularly in critical locations and orientations where you suspect detection is most difficult.
11. If alarms do not occur in the critical locations, preferably increase the zone boost for that location, or increase base sensitivity.

After choosing the base sensitivity, press ACCESS to make another adjustment or OPERATE to resume normal operation.

Using Alarm Level to evaluate interference:

1. Ensure the detector is not moving and there is no movement of nearby metal or people.
2. Gently press the + (plus) touchpad to reset the Alarm Level reading.
3. Observe the Alarm Level reading for several seconds.
4. Repeat steps 2 and 3 several times to determine the background interference level.
5. It is desired that the Alarm Level numbers remain very close to 200, indicating small levels of interference.
6. If necessary, try switching off nearby equipment or moving the detector and repeating steps 2 and 3 in order to determine the source and/or location of interference.

SEC.RU | Короткий путь к информации Скачано с sec.ru
PD6 User Manual.indd 28 4/12/2007 3:43:52 PM

3.5.20 ZONE 1-6 SENSITIVITY BOOST

Individually adjusting the sensitivity of the detector's zones helps establish an optimal detection field. The PD 6500*i* actually contains eleven zones from top to bottom. However, for the sake of simplicity in making individual zone adjustments, these eleven zones are consolidated into six adjustment zones from top to bottom. The top to bottom zones and their corresponding pinpoint lights are referred to as zones one to six, respectively. *(See Figure 3-2, next page.)*

Each zone adjustment is based on a percentage of the base sensitivity. The user may increase or decrease the percentage of the base sensitivity level in 1% increments by pressing the + (to increase) or - (to decrease) touchpads. An adjustment of zero percent means that the sensitivity of a given zone is equal to the base sensitivity.

The following are a few examples of adjustments for a base sensitivity setting of 150.

ZONE 1= 150+0% (Zone 1 is set to the base sensitivity)
ZONE 3= 150+15% (Zone 3 sensitivity is 15% greater than the base sensitivity)
ZONE 5= 150-15% (Zone 5 sensitivity is 15% less than the base sensitivity)

The range of adjustment for the six zones are as follows:
ZONE 1: -64% to + 64%
ZONE 2: -15% to + 15%
ZONE 3: -15% to + 15%
ZONE 4: -15% to + 15%
ZONE 5: -63% to + 192%
ZONE 6: -63% to + 192%

Press ACCESS to make another zone adjustment or OPERATE to resume normal operation.

SEC.RU | Короткий путь к информации Скачано с sec.ru

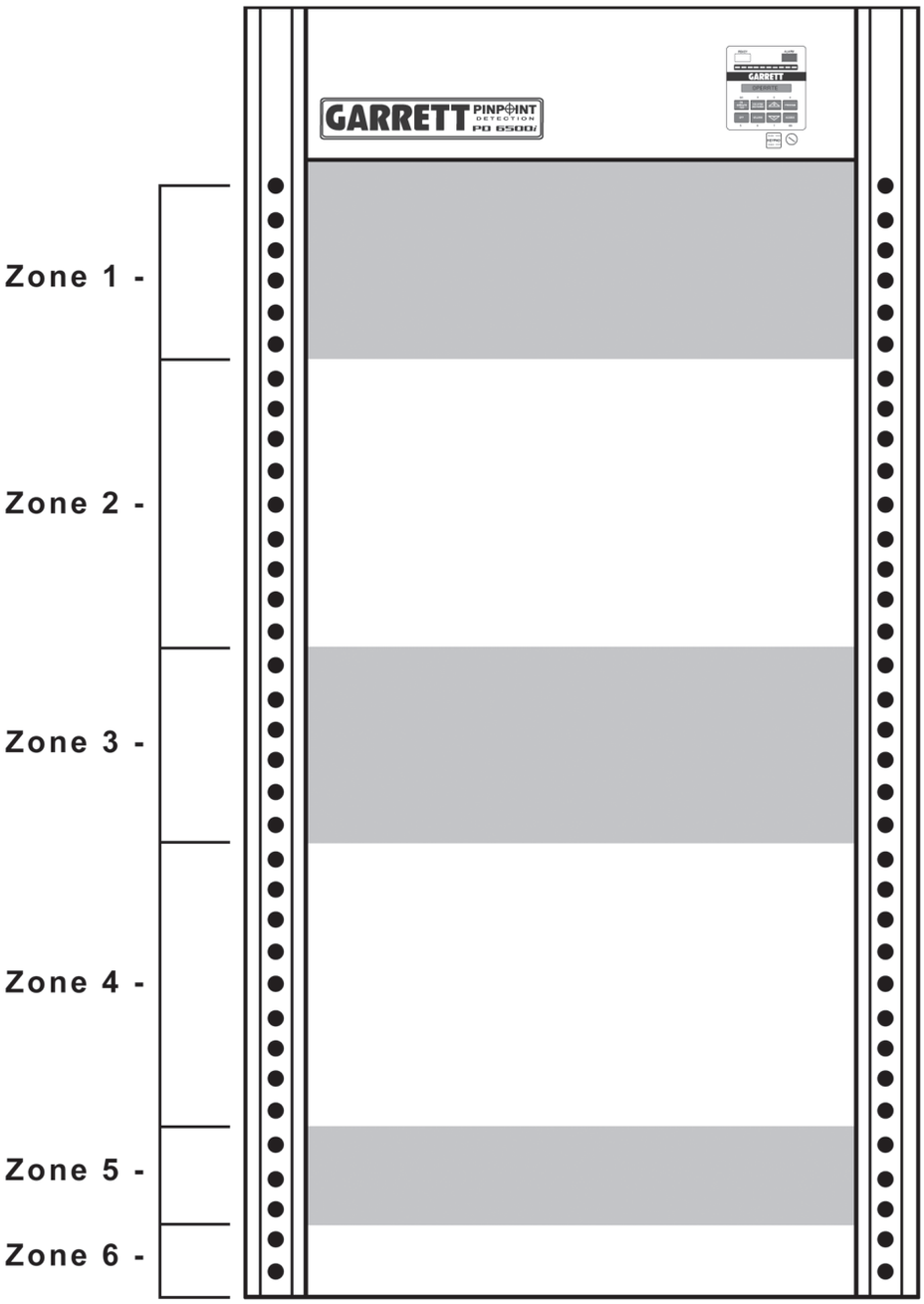

Figure 3-2: Adjustment Zones

SEC.RU | Короткий путь к информации
Скачано с sec.ru

3.5.21 RELAY

This feature enables the user to change the AC and DC relay circuits to “normally open” (RELAY N/O) or “normally closed” (RELAY N/C) depending on the installation requirements. RELAY, with either N/O or N/C, will appear on the LCD.

The user may use the + / - touchpads to change to N/O or N/C

.

Press ACCESS for next adjustment or OPERATE to resume normal operation.

3.5.22 OPERATOR ENABLE

This setting works in conjunction with the “Enable” or “Disable” key position at the Control Panel. It allows the PD 6500*i* to further protect menu settings from tampering. Settings are as follows on this table:

	Key Position	
Operator Enable	**Enable**	**Disable**
ON	All touchpads are OPERATIONAL	All touchpads are OPERATIONAL except ACCESS
OFF	All touchpads are blocked except ON, OFF and ACCESS	All touchpads are BLOCKED
ON w/Key	All touchpads are OPERATIONAL	All touchpads are BLOCKED

Press ACCESS for the next adjustment or OPERATE to resume normal operation.

3.5.23 ALTER SUPERVISOR CODE (+ TO ALTER CODE 1)

The Supervisor Adjustments code (referred to as CODE 1) is factory preset to 1234. To change it:

1. Press the + touchpad.
2. Enter a new four-digit code.
3. When the LCD prompts, REPEAT CODE, re-enter the new four-digit code. The message, CODE ENTERED OK, should appear. (If the message, INVALID ENTRY, appears, repeat steps 2 and 3.)

Press ACCESS for the next adjustment or OPERATE to resume normal operation.

3.5.24 ALTER ADMINISTRATOR CODE (+ TO ALTER CODE 2)

The Administrator Adjustments code (referred to as CODE 2) is factory preset to 5678. To change it:

1. Press the + touchpad.
2. Enter a new four-digit code.
3. When the LCD prompts, REPEAT CODE, re-enter the new four-digit code. The message, CODE ENTERED OK, should appear. (If the message, INVALID ENTRY, appears, repeat steps 2 and 3.)

Press ACCESS for the next adjustment or OPERATE to resume normal operation.

SEC.RU | Короткий путь к информации Скачано с sec.ru

3.5.25 BAR GRAPH

The LED graphical indicator on the front panel is a visual indicator to provide information about the size of metallic objects passing through the archway and provides an indication when interference from nearby moving objects and electrical sources is present. There are two bar graph settings. Press the + or - touchpads to select the desired setting, as follows:

Normal - This default setting is intended for use under normal operation and indicates activity that is significant, relative to the detection setting.

Diagnostic - This setting is intended for technical troubleshooting where a more active bar graph is useful for locating and resolving nearby noise sources.

Press ACCESS for the next adjustment or OPERATE to resume normal operation.

3.5.26 DETECTION SPEED

Detection speed refers to the speed at which a metal object passes through the archway. There are two settings for the detection speed. Press the + or - touchpad to select the desired setting, as follows:

Normal - This default setting accommodates typical transient speeds ranging from a very slow walk to a very fast walk, which are commonly encountered at security checkpoints and as are specified by known international standards.

Expanded - This setting is intended for use in those rare applications where excessive detection speeds are required such as throwing a metal object through the archway. Activating the Expanded Detection Speed setting may increase the level of noise interference.

Press ACCESS for the next adjustment or OPERATE to resume normal operation.

3.5.27 **M Filter -** This is a special filter designed to eliminate low-frequency impulse interference such as produced by the refresh pulse of CRT monitors. Set to OFF when attempting to operate the PD-6500*i* in proximity to non-Garrett walk-through metal detectors. Set to ON when receiving interference from a CRT monitor within 40” (1m). Try both settings to determine which provides the quietest operation.
Note: Press + or – touchpads to adjust. Early software versions have this feature set to ON and there is no menu option.

Press ACCESS for the next adjustment or OPERATE to resume normal operation.

3.5.28 **Frequency -** If Line Sync is set to OFF *(see Section 3.5.29)*, then this feature allows the detector’s operating frequency to be adjusted. Adjustment of the operating frequency is very useful and often necessary when operating the PD-6500*i* in proximity to non-Garrett walk-through metal detectors or other environmental noise sources. The Frequency setting can be adjusted from 0 to 2300 using the + or – touchpads.

When using this feature to eliminate interference, start with a low Frequency of 40 to 50. Then, increase the value by about 2 to 3 steps per second. The interference level, as seen on the bar

SEC.RU | Короткий путь к информации Скачано с sec.ru
PDi User Manual.indd 32 4/12/2007 3:43:54 PM

graph, will begin to reduce as you approach a quiet Frequency setting. Systematically step through the first 300 or 400 settings until you find the quietest Frequency. Even though there are 2300 frequencies available, most noise sources, including other brands of detectors, can be eliminated with a setting between 50 and 400.
Note: This adjustment is most effective with M Filter OFF.
Note: If Line Sync is set to ON, Frequency adjustment has no effect on the detector.

Press ACCESS for the next adjustment or OPERATE to resume normal operation.

3.5.29 **Line Sync -** This feature is used to place the detector into free-run operation, thereby allowing adjustment of the operating Frequency. To place detector into free-run operation, set Line Sync to OFF using the + or – touchpads. To place the unit into its normal line-sync'd operation, set Line Sync to ON.

Note: Line Sync should normally be set to ON, especially when operating in proximity to other Garrett walk-through metal detectors. Line Sync should only be set to OFF (i.e. free-run operation) when operating with non-Garrett walk-through metal detectors or other types of interference sources requiring elimination via Frequency adjustment.

Note: If Line Sync is set to OFF, Channel adjustment has no effect on the detector.

Press ACCESS for the next adjustment or OPERATE to resume normal operation.

3.5.30 **Transmit Configuration -** This feature allows the transmitters in each panel to be independently switched on or off. This feature may be useful when attempting to operate within 20" (50 cm) of non-Garrett walk-through detectors *(see illustrations in Section 2.3.4)*. Specifically, if the RX panel of the non-Garrett detector is closest to the PD-6500*i*, then it may be necessary to turn OFF the PD-6500*i*'s adjacent transmitter to prevent excessive interference in the non-Garrett detector. If the TX panel of the non-Garrett detector is closest to the PD-6500*i*, then it may be necessary to turn OFF the PD-6500*i*'s distant transmitter to prevent overload of the PD-6500*i* (indicated by warble audio). These are the only situations where one of the PD-6500*i*'s transmitters should be switched OFF. **For all other situations, both PD-6500*i* transmitters should be switched ON**. An LCD reading of "ON TRANSMIT ON" indicates both transmitters are on. Press + or – touchpads to adjust.

Note: Switching off the transmitter in either panel does not reduce detection or the ability of the PD-6500*i* to indicate the target's vertical position with its zone lights. However, switching off either transmitter does eliminate the PD-6500*i*'s ability to indicate the target's horizontal position with separate left and right zone lights. With either transmitter switched off, the PD-6500*i* is operating as a single-sided detector. It therefore can not resolve the target's horizontal position, as is the case with conventional, less advanced detectors.

Press ACCESS for the next adjustment or OPERATE to resume normal operation.

SEC.RU | Короткий путь к информации Скачано с sec.ru
PDi User Manual.indd 33 4/12/2007 3:43:54 PM

3.6 FACTORY DEFAULT SETTINGS

The Garrett PD 6500*i* arrives from the factory with the following default settings:

Function:	Value:
Volume	05
Random Alarm %	0 %
Tone	5
Pacing Lights	ON
Zone Lights	2 Sec
Alarm Time	1 Sec
I / R Analysis	ON
Language	English
Synchronization	Master
Channel	1
Program	Airports
Base Sensitivity	165
Zone 1	0%
Zone 2	0%
Zone 3	0%
Zone 4	0%
Zone 5	0%
Zone 6	0%
Relay	N / O
Operator Enable	ON
Supervisor Access Code	1234
Administrator Access Code	5678
Bar Graph	Normal
Detection Speed	Normal
M Filter	ON
Frequency	50
Line Sync	ON
Transmit Configuration	ON / ON

SEC.RU | Короткий путь к информации Скачано с sec.ru

3.7 CODE RESET

Should the administrator access code be forgotten or misplaced, the PD 6500*i* has a mechanical method for resetting the administrator access code to factory preset code.

1. Open the main cover of the detection unit.
2. Remove the three screws attached to the controller module cover.
3. With power turned on and the unit in Operate mode, press and hold the ACCESS CODE RESET button (on the upper left side of the lower circuit board) for ten seconds. *(See Figure 3-3.)*

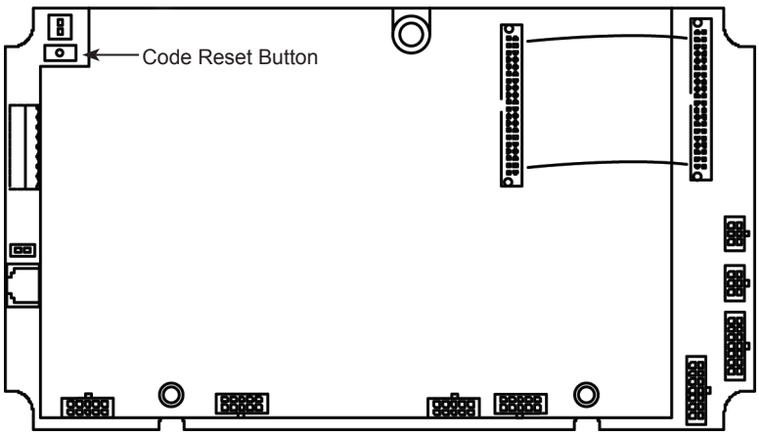

Figure 3-3

SEC.RU | Короткий путь к информации Скачано с sec.ru

4. PROGRAM AND SENSITIVITY SETTINGS

The PD 6500*i* is shipped with program and sensitivity settings which are suitable for many general security applications. It is important that prior to placing a unit in service that the Administrator determine the specific needs of the installation and make necessary changes to the settings described in Section 3.

The required Program and Sensitivity settings of walk-through metal detectors are dependent on individual security screening requirements and therefore must be the responsibility of the checkpoint Supervisor. Program, sensitivity and zone boost settings should be established at a level that permits the detector to detect the forbidden objects that are expected to appear at a particular screening station. Included in the test procedure should be the requirement that the tester be free of all metallic items, including watches, belts, shoe shanks, cell phones, etc. prior to arming himself with the test objects. A hand-held metal detector can be used to confirm that the tester is “clean” of extraneous metallic items.

Careful determination of Program, Sensitivity and Zone Boost settings is important, since lower than required sensitivity and/or zone boosts settings can decrease the ability of the equipment to detect forbidden objects and higher than necessary settings can result in excessive nuisance alarms that may disrupt traffic flow and decrease effectiveness of the equipment and security operation.

4.1 PROGRAM SELECTION

The PD 6500*i* is equipped with several programs to address a variety of security needs. A program whose characteristics are appropriate to the application should be selected. Table 4-2 is a list of available programs and information about the characteristics of the programs. Figure 4-1 shows the detection characteristics of the Loss Prevention programs for various metals.

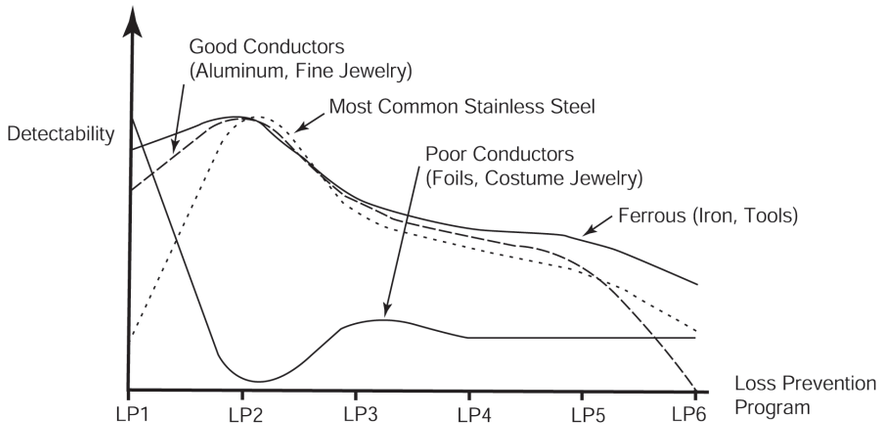

Figure 4-1 Loss Prevention Programs

4.2 SELECTING SENSITIVITY AND ZONE BOOST SETTINGS

The procedure described in Section 3.5.19 (Alarm Level) is helpful in determining the required base sensitivity setting for the selected program. This test is often performed with the test objects carried in various orientations near the center of the body. Once the base sensitivity has been established, continue testing at various elevations to make any necessary zone boost adjustments. It is often helpful to return to the alarm level reading to evaluate the effects of the zone boost adjustments. *(See Section 3.5.20.)*

SEC.RU | Короткий путь к информации Скачано с sec.ru

PROGRAM	DESCRIPTION / USE
Airports Schools Courthouses Buildings Special Events	Designed primarily for detection of guns and other such weapons. Exceeds FAA detection requirements (i.e. FAA 3-gun test). Provides excellent discrimination against innocuous items such as coins, keys, jewelry, shoe-shanks, cigarette packs, foil, etc. Recommended for applications requiring general weapons detection while providing high traffic throughput with minimal nuisance alarms.
Airports Enhanced Airports Enhanced - 2 AENA-1 AENA-2 Nuclear	Designed for the detection of guns as well as knives and other flat or rod-shaped weapons. Meets the Transportation Security Administration's (TSA) Enhanced walk-through Metal Detector (EMD) requirements and European Airport requirements and exceeds FAA requirements. Provides good discrimination against innocuous items such as coins, keys, jewelry, cigarette packs, foil, etc. Recommended for applications requiring comprehensive detection of guns and knives while providing moderate traffic throughput with low-to-moderate nuisance alarms.
Prisons	A specialized weapons detection program designed to detect all metals and provide the highest level of security available. Exceeds FAA and TSA detection requirements. Provides no discrimination against innocuous items and is therefore recommended for applications which allow low traffic throughput.
Loss Prevention 1 Loss Prevention 2 Loss Prevention 3 Loss Prevention 4 Loss Prevention 5 Loss Prevention 6	Loss prevention programs one to six are used to detect metals ranging from conductive and/or non-ferrous to non-conductive and/or ferrous respectively. Loss Prev1 is designed to detect all metals, particularly good conductors such as jewelry, computer components and most coins. Loss Prev 2 is similar to Loss Prev1 except it is designed to ignore poor conductors, such as cigarette or chewing gum foil and keys. Loss Prev3 to 6 are designed to detect items that are increasingly less conductive and more ferrous (i.e., contain more iron), e.g., Loss Prev3 to 5 detects most weapons; Loss Prev6 is most recommended for detecting steel tools. Low–moderate throughput. See Figure 4-1 for a graph representing detection capabilities of Loss Prevention programs, Loss Prev1 to Loss Prev6.
Alternate	For use as an alternative under difficult environmental conditions, including electrical interference. A general weapons program that provides moderate discrimination against pocket items while offering the best balanced response to all metals. Meets FAA requirements (i.e., three-gun test).

Figure 4-2 - Programs Chart

SEC.RU | Короткий путь к информации Скачано с sec.ru
PDi User Manual.indd 37 4/12/2007 3:43:56 PM

5. OPERATION

5.1 OPERATIONAL TESTING

5.1.1 OPERATIONAL TEST PIECE

Actual forbidden objects should be used as targets for initial calibration. Once the detector settings are established it is recommended that a Test Piece be selected which is similar in size, shape and metallic composition to the smallest forbidden object. This Test Piece can be used to generally verify operation on a regular basis without the necessity of having actual weapons on-hand at the screening station.

Garrett offers an optional Operational Test Piece (OTP) that meets the specifications of the U.S. Federal Aviation Administration (FAA) and is a representation of a small handgun. Garrett also offers an optional Flat Test Piece (FTP) which represents a small knife (see Section 8.8.) You may want to consider other test pieces if your screening operation requires detection of objects other than guns and / or knives.

5.2 OPERATOR RESPONSIBILITIES

The Operator must follow the Supervisor's instructions regarding use of the PD 6500*i* and the appropriate response to alarms.

The Operator's ongoing responsibility is to ensure that the PD 6500*i* always operates according to the information displayed on the LCD and to determine the cause of the alarms.

The Operator should ensure that the:

1. PD 6500*i* is always operating properly
2. Program and sensitivity settings are correct by pressing PROGRAM DISPLAY
3. LED bar graph shows minimal interference (two lights maximum)
4. Green READY light is on
5. Operational testing is performed according to the Supervisor's instructions.

5.2.1 READY LIGHT

The Green READY light must appear before a patron is permitted to enter the walk-through for inspection.

If the READY light shuts off and remains off, the Operator should activate the self test report by pressing the OPERATE touchpad; the results will appear on the LCD. During this time, no one is permitted to enter the walk-through. Traffic may resume only when the READY light reappears and remains on. If the READY light does not reappear or a failure message is displayed on the LCD, the Operator should attempt to resolve the problem or consult the Supervisor.

5.2.2 DIAGNOSTIC PROBLEMS

As a general rule, the operator should follow the instructions regarding the appropriate response to failures revealed by the self test. However, the operator may be able to remedy the following failures:

SEC.RU | Короткий путь к информации Скачано с sec.ru

RX OPTIC FAIL: Ensure the openings for the optical sensor (located inside both side panels at approximately 30” from the floor) are not blocked.

RX A or B ZN # BAL FAIL: Ensure there is no large metal object near the PD 6500*i*.

If the self-test reveals a failure that severely limits or prohibits the PD 6500*i*’s performance, the alarm will sound, the LED display will flash and the message SYSTEM FAILURE will appear on the LCD. The LED will continue flashing until the power is turned off or the failure is remedied.

The Operator should inform the Supervisor of any problems that occur.

5.2.3 RESPONDING TO ALARMS

If a patron triggers an alarm and the alarm light appears, the Operator should instruct the individual to step outside the walk-through and remove any metal objects from their body and/or clothing. The Operator should then either scan the patron with a hand-held metal detector, such as a SuperScanner of SuperWand or ask the person to re-enter the walk-through.

If an alarm sounds after the patron reenters the walk-through, he or she must be re-scanned with a hand-held metal detector.

The pinpoint lights facilitate the screening process by indicating the location of ALL alarmable objects within 33 pinpoint areas. In cases, where there is more than one object, the lights appear in each array that requires investigation. This enables the Operator to know from which area(s) objects require removal and to concentrate on the problem areas when hand scanning, resulting in improved overall security and increased throughput.

SEC.RU | Короткий путь к информации Скачано с sec.ru

6. MAINTENANCE / TROUBLESHOOTING

There are several factors that may cause difficulties with the PD 6500*i*. These can include installation, environmental noise, and program selection, as well as failures of the circuitry. Often a problem can be corrected quickly and easily by using the following information without the need for replacement parts or assistance from the factory or your dealer.

The following sections contain specific information and setup and should be read as part of the troubleshooting procedure:

Procedure:	Manual Section:	Page(s):
Site Selection & Requirements	Section 2.1	11–16
Unit Assembly	Section 2.2	16–19
Self Test	Section 3.3	24
Detector Settings	Section 4, 4.1, 4.2	36–37
Operation	Section 5, 5.1, 5.2	38–39

Note: If you are having difficulties during setup, it may be desirable to return the unit to the factory default settings. *(See Section 3.6.)*

If the above-listed sections do not take care of a specific problem, sections 6.1–6.3 cover other issues which can commonly affect performance.

6.1 LOCATING AND RESOLVING NOISE SOURCES

The PD 6500*i* uses the latest digital signal processing technologies to eliminate the effects of most external noise sources. However, the high sensitivity required to detect smaller objects may make the equipment susceptible to interference from a variety of external sources. The presence of these noise sources may be recognized through unusual bar graph activity typically spiking into the yellow or red when no one is being screened. The source of the noise may be mechanical or electrical. Two techniques are often helpful in locating external noise sources.

6.1.1 METHOD TO LOCATE CONTINUOUSLY OCCURRING NOISE INTERFERENCE

1. Enable the keypad by switching the TOUCHPAD KEY LOCK to the enable position. *(See section 1.3.1.5.)*
2. Enter the diagnostic mode by pressing the ACCESS touchpad and then entering the code 8721.
3. Press the ACCESS key incrementally to view the alarm levels for each zone. The numbers on the left and right indicate the ambient noise levels present on the left and right panels for the zone currently being observed. The number in the center indicates the zone currently being observed.
4. The alarm level indicates the peak level of the interference. Press the + key to reset the indicator to allow a new reading. After taking several readings for a given zone, press ACCESS to proceed to the next zone.
5. Observe the alarm levels of each panel for each zone. Lower numbers indicate greater ambient noise. Higher numbers (185-200) indicate low or no external interference. Zones with alarm level numbers approaching or below the selected sensitivity setting

SEC.RU | Короткий путь к информации Скачано с sec.ru
PDi User Manual.indd 40 4/12/2007 3:43:56 PM

should be investigated. Large differences in the left and right numbers indicate nearby noise sources. Smaller differences in the left and right numbers indicate more distant noise sources.

6. Attempt to identify and resolve noise sources by switching off nearby electrical equipment sequentially while observing changes to the alarm levels. Moving the detector to change the distance or angle from nearby equipment or interference sources in the floor or walls is often found to be helpful.

7. The interference may also be resolved by switching M Filter ON or OFF, or adjusting Frequency. *(See Sections 3.5.27–3.5.29.)*

6.1.2 METHOD TO LOCATE PERIODIC "SPIKING" NOISE SOURCES

1. Enable the keypad by switching the TOUCHPAD KEY LOCK to the enable position.
2. Switch the IR ANALYSIS to OFF. *(See Section 3.5.14.)*
3. Observe the Zone indicators to determine the location of the alarm source.
4. Adjust the BASE SENSITIVITY up or down until only a limited number of zone lights are active. This will indicate the location of the strongest interference. *(See Section 3.5.2.)*
5. After identifying the location of the strongest interference, investigate possible mechanical or electrical devices that are in the vicinity. Possible sources of interference are moving gates, loose panels on cabinet x-ray equipment, electrical components in nearby equipment. Remember that nearby sources (within a few feet) are likely to cause the zone lights to activate in only one or two zones, often on only one panel. Sources that are farther removed are likely to cause more zone lights to activate.
6. One method to further identify the source of noise is to switch off, disconnect or move equipment suspected of interference. A second method is to temporarily rotate or move the archway to determine an increase or decrease in interference.
7. The interference may also be resolved by switching M Filter ON or OFF, or adjusting Frequency. *(See Sections 3.5.27–3.5.29.)*
8. Remember to restore the Sensitivity and IR settings prior to placing the equipment back in service.

SEC.RU | Короткий путь к информации Скачано с sec.ru
PDi User Manual.indd 41 4/12/2007 3:43:57 PM

6.2 ERROR CODE TABLE-DIAGNOSTICS

CRITICAL FAILURES AND NON-CRITICAL FAILURES

Failures are classified as either “critical” or “non-critical”. A critical failure prevents the PD 6500*i* from operating and must be corrected immediately. When a critical failure occurs, the audio alarm sounds, the overhead display begins flashing and the message, SYSTEM FAILURE, appears on the LCD.

A non-critical failure does not prevent the PD 6500*i* from operating; however, it should be corrected as soon as possible.

CRITICAL FAILURES	NON-CRITICAL FAILURES
• TX A or B FAIL • POWER MOD FAIL • RX BOARD FAIL • RX A or B ZN # PK FAIL • CABLE MISCONNECT • DSP FAIL	• NO SLAVE OUTPUT • SLAVE SYNC • AC SYNC or SYNC FAIL • RX or TX OPTIC FAIL • RX A or B ZN # BAL FAIL

Verify	Self Test: Possible Failures and Remedies Verify and / or Replace	Special Note
TX A FAIL*	1. Panel A cables & connectors 2. Transmitter control (TX) board 3. Panel A	
TX B FAIL*	1. Panel B cables and Connectors 2. TX board 3. Panel B	
NO SLAVE OUTPUT	1. Verify connections to slave unit 2. Verify TX board	
SLAVE SYNC	1. Verify connections from master unit 2. Verify TX board	
SYNC FAIL	1. Power connections to TX board 2. Power supply module 3. Transmitter control board	
AC SYNC FAIL	1. Make sure AC power is connected	Ensure line voltage is between 100 and 240 VA
TX OPTIC FAIL	1. Make sure panel cables and PC Board are plugged in 2. IR Emitter board assembly in panel A	

SEC.RU | Короткий путь к информации Скачано с sec.ru

Self Test: Possible Failures and Remedies		
Verify	**Verify and / or Replace**	**Special Note**
RX OPTIC FAIL	1. Make sure panel cables and PC board are plugged in 2. IR Detector board assembly in Panel B	Ensure no blockage of IR beam (of Panel A and Panel B) at waist level of archway
POWER MOD FAIL*	Power Module	Ensure line voltage is between 100 and 240 VAC
RXA BOARD FAIL*	40-pin cable connection from Board to Board	Check to see all connectors are properly seated
RX Zn # BAL FAIL	1. Cable and connector to Panel A 2. Circuit Board Connects (# = zone with balance failure)	Ensure no large, metal object nearby. If necessary, move object or relocate PD 6500*i*
RXB Zn # BAL FAIL	1. Cable and connector to Panel B 2. Circuit Board Connects (# = zone with balance failure)	Ensure no large, metal object nearby. If necessary, move object or relocate PD 6500*i*
RXA Zn # PK FAIL*	1. Panel A cable and connectors 2. Circuit Board Connections	Ensure no TX A or B FAIL. Ensure no large, metal object nearby. If necessary, move object or relocate PD 6500*i*
RXB Zn # PK FAIL*	1. Panel B cable and connectors 2. Circuit Board Connections	Ensure no TX A or B FAIL. Ensure no large, metal object nearby. If necessary, move object or relocate PD 6500*i*
CABLE MISCONNECT*		Ensure that the cables are attached to the circuit boards are connected as described in the inside cover of the controller module.

SEC.RU | Короткий путь к информации Скачано с sec.ru

6.3 REPAIR

The PD 6500*i*s modular design facilitates assembly and maintenance.

If problems are site-related, see Section 2.1 or contact the factory for assistance. Often adjusting or relocating the equipment, or removing nearby objects resolves problems.

If the equipment does not perform properly, contact the factory for assistance.

6.3.1 CONTROLLER MODULE

The controller module, located in the overhead panel, contains all of the circuit boards required for operation. The cables that connect the controller module to the side panels are plugged into connectors at the top of each panel. The controller module cover should not be removed except to:

- Connect wires to remote alarm relays or synchronization circuitry (see Section 7);
- Attach the battery pack module. (see Section 8.1);
- Revert access codes to factory setting (see Section 3.6.);
- Attach remote console or CMA Interface Module.
- Perform a repair.

6.3.2 POWER MODULE

The power module supplies the power required for operation. Ensure that the power cord is plugged into the connector on the lower left side of the module.

SEC.RU | Короткий путь к информации Скачано с sec.ru

6.4 Replacement Parts

Replacement parts are available from Garrett. Refer to Table 6-4 and following illustrations to identify parts and part number.

Table 6-4 (Replacement Parts)

ITEM	DESCRIPTION	PART #	QTY
1	Access Code Card	1562300	2
2	User's Manual	1532010	1
3	Video DVD	1678600	1
4	Detection Unit	2233452	1
5	Panel A	2233200	1
6	Panel B	2233300	1
7	TX/Controller Board Pcb Assembly	2340502	1
8	RX Pcb Assembly	2340702	2
9	IR Emitter Pcb Assembly	2342002	1
10	IR Detector Pcb Assembly	2342102	1
11	Light Bar Controller	2341112	2
12	Light Bar Slave Set	2341212	2
13	Power Supply Module	2338612	1
14	Touch panel	9425100	1
15	Speaker Assembly	2404900	1
16	Cable Assembly A Det Unit (Short)	2421000	1
17	Cable Assembly B Det Unit (Long)	2421100	1
18	Ribbon Cable 40 x 3.5 (Tx-Rx)	2416800	1
19	Flex Strip Jumper 14 x 1.2	2420600	8
20	Power Cord 110V 17'	9411500	1
21	AC Cord Jumper	9427600	1
22	Power Cord - Euro Plug	9421300	1
23	Power Cord - NEMA L5-I5P Locking	9411570	1
24	Crosspiece	9968800	1
25	Screw 1/4-20x3	9820400	8
26	Finishing Washer	9820500	8
27	Mount Assembly IR Emitter/Detector	2400202	2
28	Hole Plug	9832300	1
29	Extrusion Lens	9999200	4
30	Boot	9999900	2
31	Battery Gel Cell 12 V 5 AH	9413000	2

SEC.RU | Короткий путь к информации Скачано с sec.ru

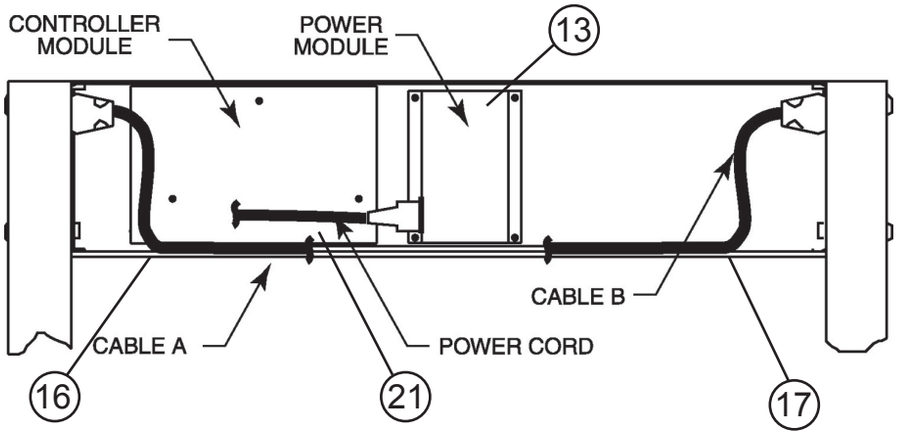

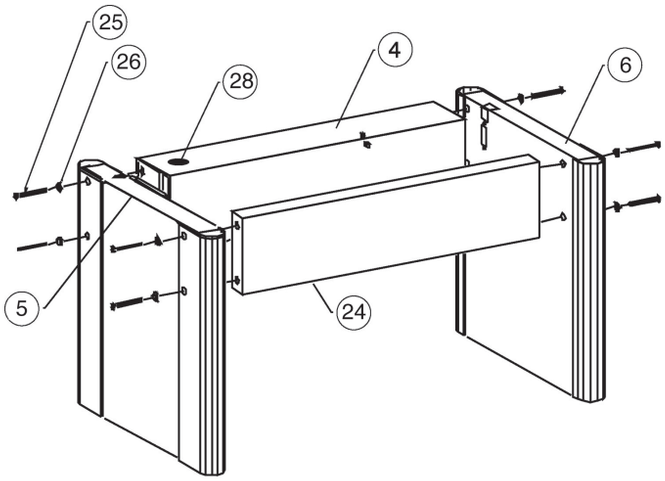

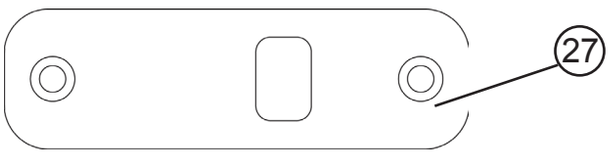

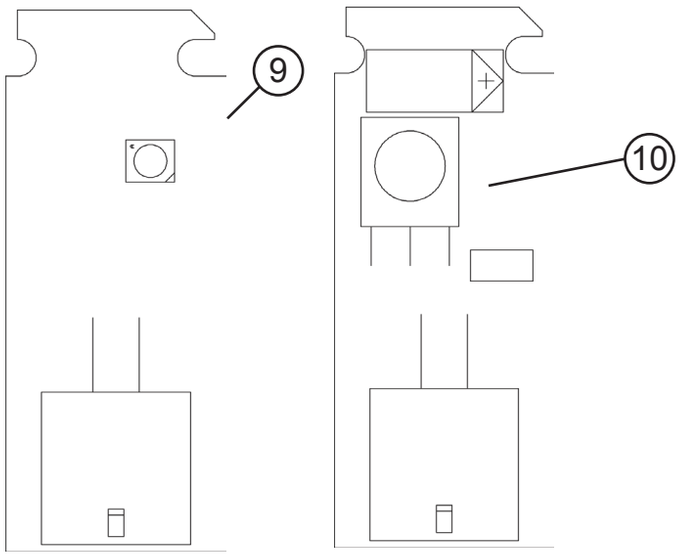

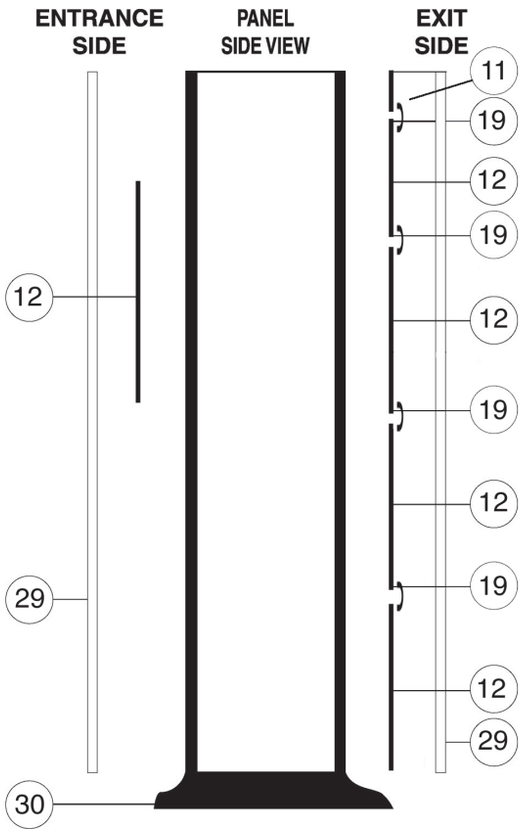

SEC.RU | Короткий путь к информации
Скачано с sec.ru

6.5 WARRANTY INFORMATION

Garrett Electronics, Inc. (“Garrett”) warrants that each piece of security equipment manufactured by Garrett is protected by the following limited parts and labor warranty for a period of 24 (twenty-four) months (the “Warranty”). During this 24-month period Garrett will inspect and evaluate all equipment returned to its authorized repair station or factory to determine if the equipment meets Garrett’s performance specifications. Garrett will repair or replace at no charge to the owner all parts determined faulty. This Warranty does not cover batteries nor any and all failures caused by abuse, tampering, theft, failure due to weather, battery acid or other contaminants and equipment repairs made by an unauthorized party.

THIS WARRANTY IS EXPRESSLY IN LIEU OF ALL OTHER WARRANTIES, EXPRESSED OR IMPLIED, INCLUDING THE WARRANTY OF MERCHANTABILITY OR FITNESS FOR A PARTICULAR PURPOSE. THE BUYER ACKNOWLEDGES THAT ANY ORAL STATEMENTS ABOUT THE MERCHANDISE DESCRIBED IN THIS CONTRACT MADE BY SELLERS’ REPRESENTATIVES, IF ANY SUCH STATEMENTS WERE MADE, DO NOT CONSTITUTE WARRANTIES, SHALL NOT BE RELIED UPON BY THE BUYER, AND ARE NOT A PART OF THIS CONTRACT FOR SALE. THE ENTIRE CONTRACT IS EMBODIED IN THIS WRITING. THIS WRITING CONSTITUTES THE FINAL EXPRESSION OF THE PARTIES’ AGREEMENT AND IS A COMPLETE AND EXCLUSIVE STATEMENT OF THE TERMS OF THIS AGREEMENT.

The parties agree that the Buyers’ sole and exclusive remedy against Seller shall be for the repair and replacement of defective parts. The Buyer agrees that no other remedy (including, but not limited to, incidental or consequential damages for lost sales, lost profits, injury to person or property) shall be available to him.

SEC.RU | Короткий путь к информации Скачано с sec.ru

7. RELAY OPTIONS

The PD6500*i* is equipped with solid state switches capable of controlling external alarms, locking devices, video recorders, etc. Several combinations of switching are available to allow control of low voltage AC and DC circuits as well as control of logic inputs. Control is activated when the red Alarm light on the control panel is activated. The control may be configured to normally open or normally close based on menu settings. *(See Section 3.5.21.)*

7.1 AC CONTROL

To control devices which require low voltage AC follow Figure 7-1. The optically isolated triac output is capable of controlling up to 48 Vrms at up to 100 ma. The output is electrically isolated from the ground.

To connect an external alarm, a locking device, a VCR/video monitor or other AC component, follow Figure 7-1. The optically-isolated triac output conducts only when the red Alarm light is illuminated. Control should not exceed 48Vrms and 100mA. The output is electrically isolated from ground.

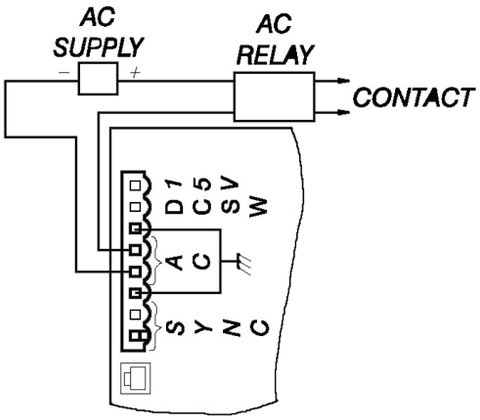

Figure 7-1

Procedure:

1. Disconnect from AC power.
2. Open access door of detection unit.
3. Remove the three screws that hold controller cover. Remove the terminal connector.
4. Connect the relay or device to controller circuit board, as shown.
5. Replace terminal connector cover and reconnect power.

7.2 DC CONTROL

To control devices which require low voltage DC, there are three options for connection.

Cases 1 (internal power), 2 (external power) and 3 (external logic control) (see Figures 7-2, 7-3 and 7-4) show alternatives to connecting an external device that requires a low voltage, direct current. The output is an open collector configuration that can switch 15V at 100mA or less, including connections to computing devices and other equipment requiring low level DC.

SEC.RU | Короткий путь к информации Скачано с sec.ru
PDi User Manual.indd 48 4/12/2007 3:44:00 PM

Procedure for Cases 1 and 2:

1. Disconnect from AC power.
2. Open access door of detection unit.
3. Remove the three screws that hold controller cover. Remove the terminal connector.
4. Connect the relay or device to controller circuit board, as shown.
5. Replace cover and reconnect power.

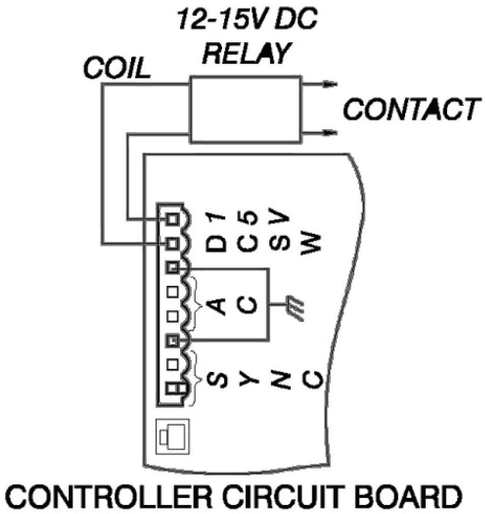

Figure 7-2

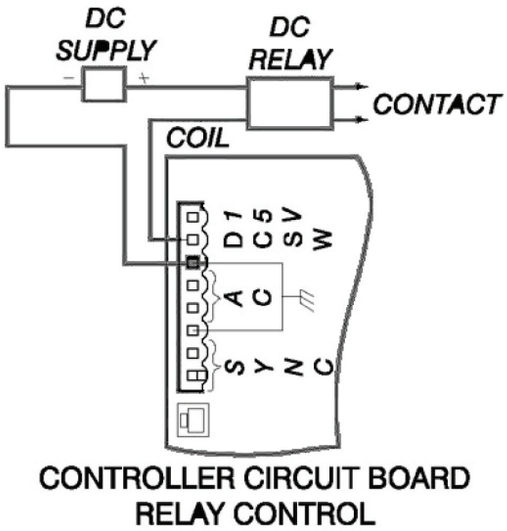

Figure 7-3

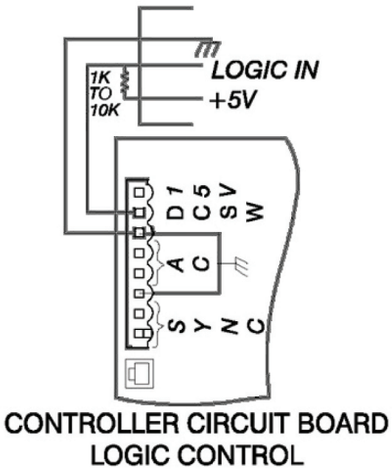

Figure 7-4

SEC.RU | Короткий путь к информации Скачано с sec.ru

8. ACCESSORIES

8.1 BATTERY PACK MODULE PN 2225400 (U.S.) and 2225470 (Euro)

The battery pack module is a field-installable assembly that provides approximately 10 hours of uninterrupted operation. A monitoring circuit ensures the batteries maintain maximum charge without battery damage. An alarm warns the operator when batteries are low.

NOTE: The green ready light rapidly blinks when AC power is disconnected and the unit is operating from battery power.

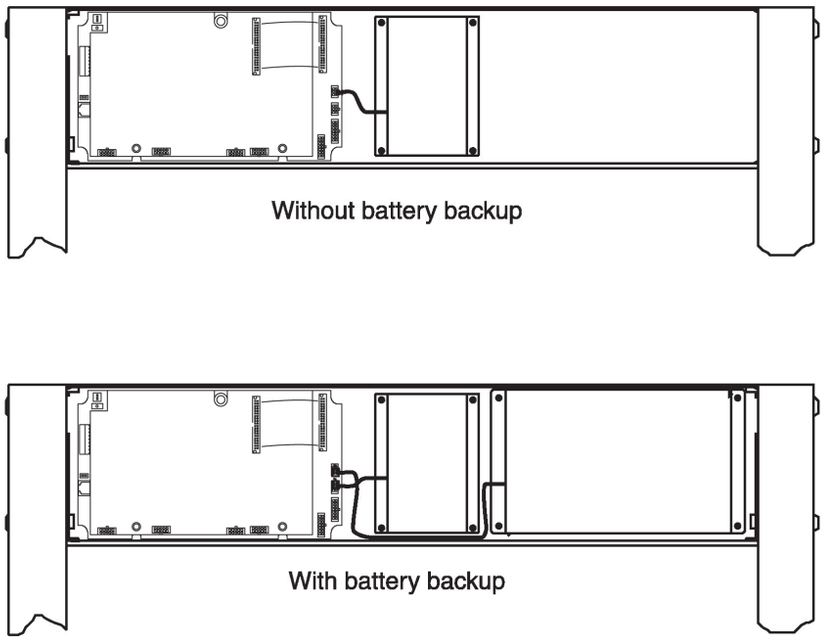

Figure 8-1

8.1.1 BATTERY PACK MODULE INSTALLATION

1. Open the access door of the detection unit.
2. Disconnect the AC power plug from the power supply module.
3. Remove the three screws that hold the controller module cover.
4. Remove the four acorn nuts from the package.
5. Install the battery pack module with the acorn nuts.
6. Disconnect the power supply module connector from the controller circuit board. *(See Figure 8-1.)*
7. Reconnect the power supply and battery pack modules. *(See Figure 8-1.)*
8. Reassemble the system and test.

8.2 POWER CORD JUMPER - 10’

PN 9431900

The Power Cord Jumper is a convenient method of supplying power to multiple units located in close proximity. Cable length allows spacing of up to seven feet between units. Using the

SEC.RU | Короткий путь к информации Скачано с sec.ru

power jumper is an effective method to ensure that nearby units are properly connected to the same power phase. To install, simply remove the rubber grommet in the top of the detection housing and install in series with the power cord jumper. Each PD 6500*i* requires less than two amperes of current and it is possible to safely connect five or more units to a common electrical outlet.

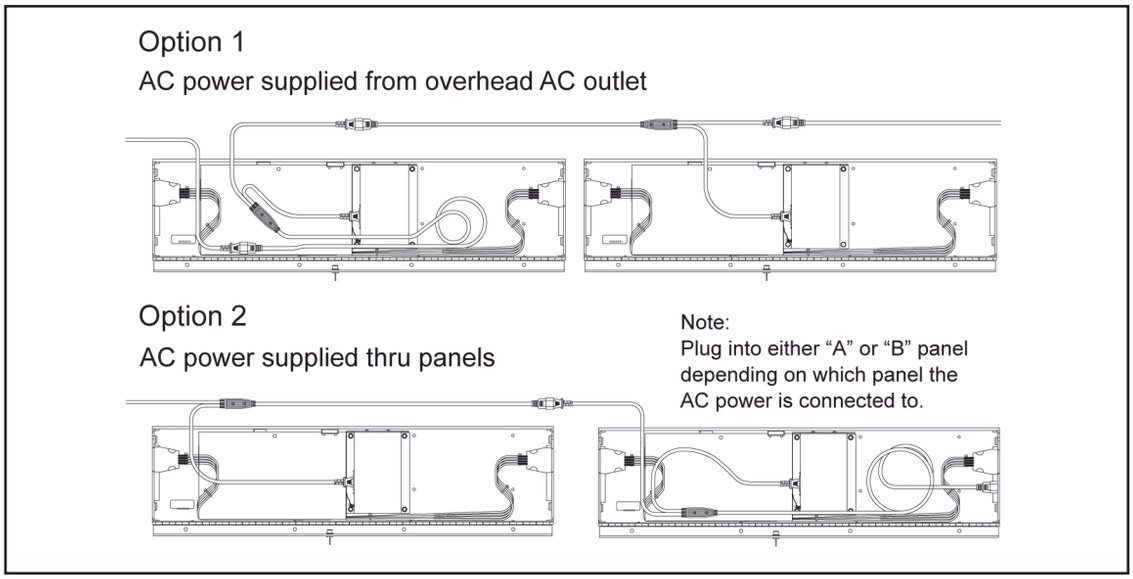

8.3 Desktop Remote Control

PN 2266400

The desktop remote control allows the user to monitor and control the PD 6500*i* from a remote location. The remote includes a full keypad, LCD Panel, LED bar graph, zone indications, and audible alarm. A 50 foot cable is included as a standard length cable. Cables up to 200 feet are available as a special order from the factory.

Installation requires access to the detection unit housing. Remove the rubber plug in the top of the unit to allow the cable to feed into the housing. Remove the three screws that secure the circuit board cover and connect the cable at the lower left corner of the pcb.

SEC.RU | Короткий путь к информации
Скачано с sec.ru

8.4 MAGNADOLLY WHEEL TRANSPORTER

The MagnaDolly transporter system may be obtained in two versions. A permanent version is preferred when frequent relocation of the unit is required. A removable version is used when moves are infrequent or when there is a requirement to move multiple units. The removable version requires no modifications to the panels for installation.

8.4.1 INSTALLATION OF PERMANENT MAGNADOLLY PN 1169000

Follow installation instructions and use drilling template provided with the MagnaDolly to permanently install upper and lower wheel assemblies, support bar and bracket.

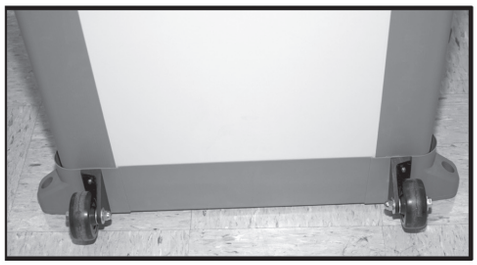
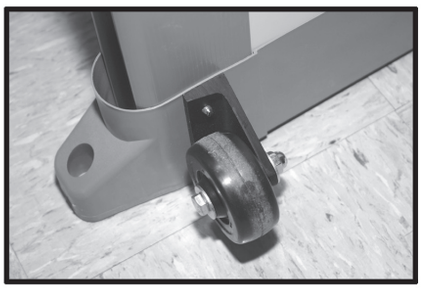
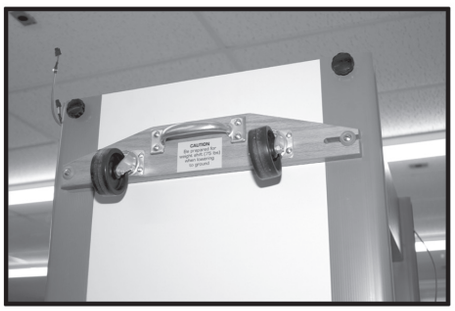

8.4.2 INSTALLATION OF MAGNADOLLY QUICK RELEASE PN 1168000

Using a slotted screwdriver, install the upper wheel assembly. Lift the edge of the detector to slip the lower wheel assembly in place.

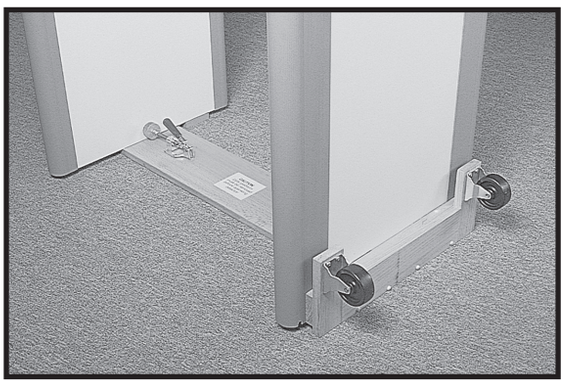

SEC.RU | Короткий путь к информации Скачано с sec.ru

8.5 ADHESIVE FLOOR MOUNTS

PN 1604100

Adhesive floor mounts may be used to fix the location of the PD 6500*i* to eliminate unauthorized relocation and to protect from tipping. The mounts are intended for smooth floors and eliminate damaging finished floors caused by anchor bolts.

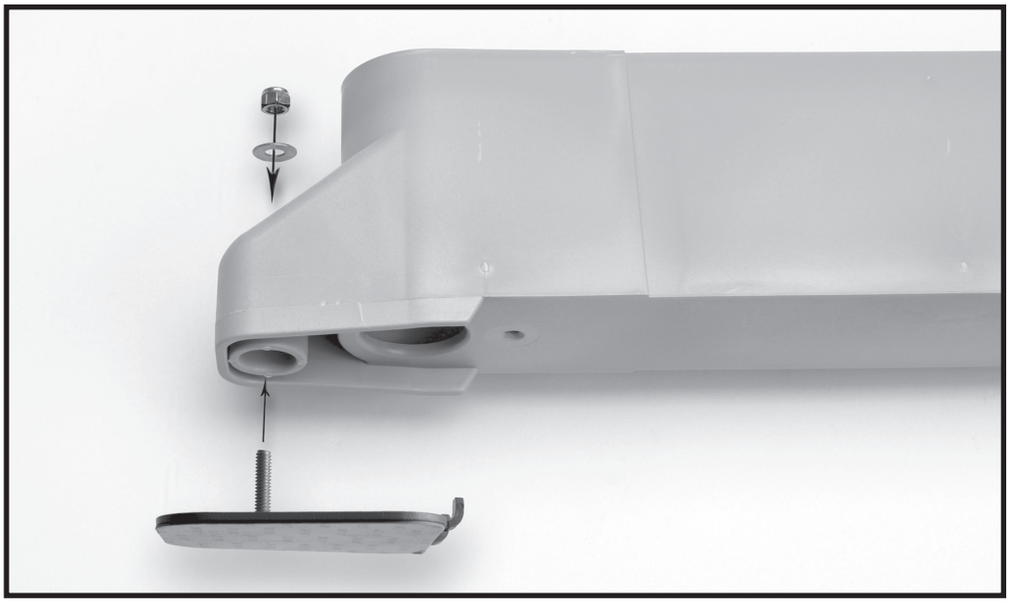

8.6 STABILIZER BARS

PN 1603900

Stabilizer bars may be used to prevent the PD 6500*i* from tipping over.

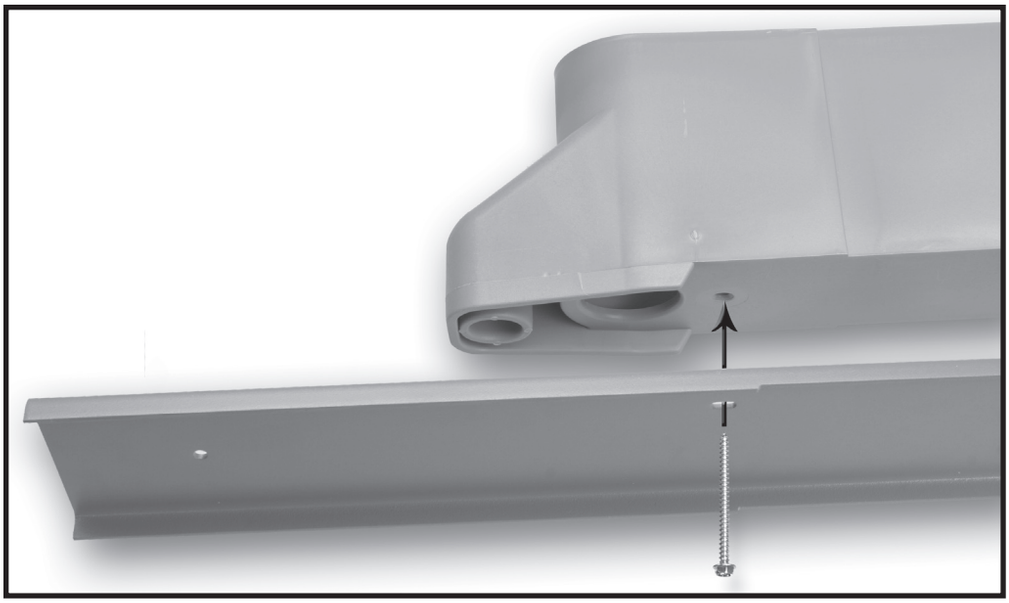

SEC.RU | Короткий путь к информации Скачано с sec.ru

8.7 CMA MODULE

PN 1168310

The CMA Interface Module is used in conjunction with a 10baseT network and a personal computer. It allows control, real-time monitoring and diagnostics from a remote location. The internal memory records all changes to settings and patron traffic and alarm history.

To install the module, first install the short RS485 cable on the circuit board. Attach the CMA module using the screws which attach the circuit board cover. Connect the CMA to a network hub or PC using an appropriate category 5 cable. Follow the configuration instructions supplied with the CMA.

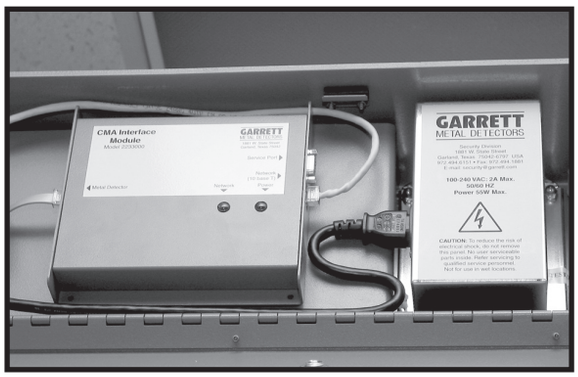

8.8 OPERATIONAL TEST PIECE (OTP) and FLAT TEST PIECE (FTP)

Operational Test Piece (OTP)
PN 1600600

OTP is designed by the FAA to represent a small hand-gun.

Flat Test Piece (FTP)
PN 1620570

FTP represents a small knife or box-cutter.

SEC.RU | Короткий путь к информации Скачано с sec.ru