INSTALLATION
INSTALACIÓN
INSTALLATION
INSTALAÇÃO
安装
取り付け
INSTALLATION
INSTALLAZIONE

ProxPro® II Reader

1 PREPARING / PREPARACIÓN / PRÉPARATION / PREPARAÇÃO / 准备 / 準備 / VORBEREITUNG / PREPARAZIONE

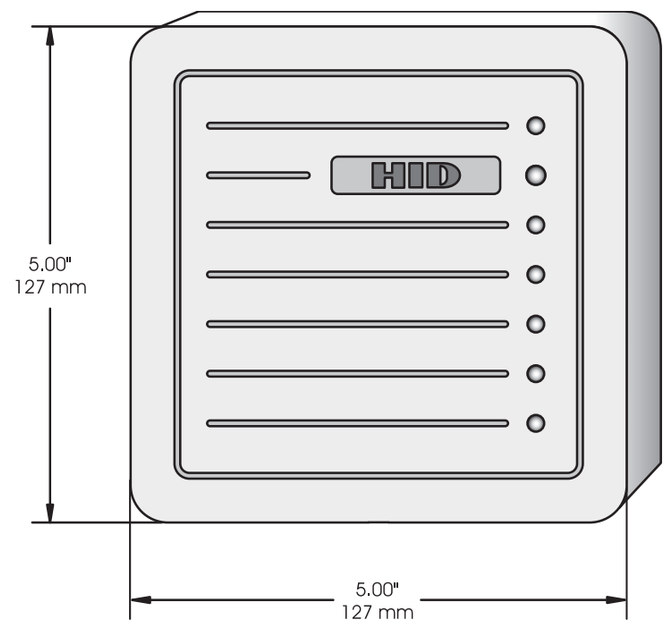

2 CONNECTING / CONEXIÓN / CONNEXION / CONEXÃO / 接线 / 接続 / ANSCHLUSS / CONNESSIONE

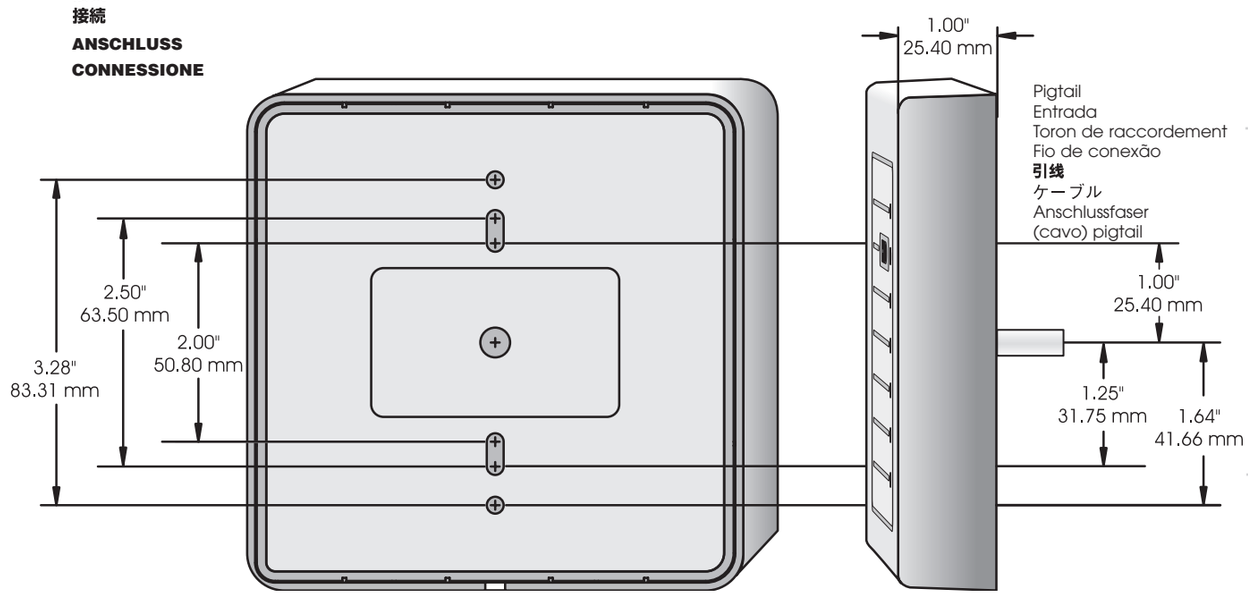

3 TESTING / PRUEBA / TEST / TESTE / 测试 / テスト / TESTEN / TESTARE

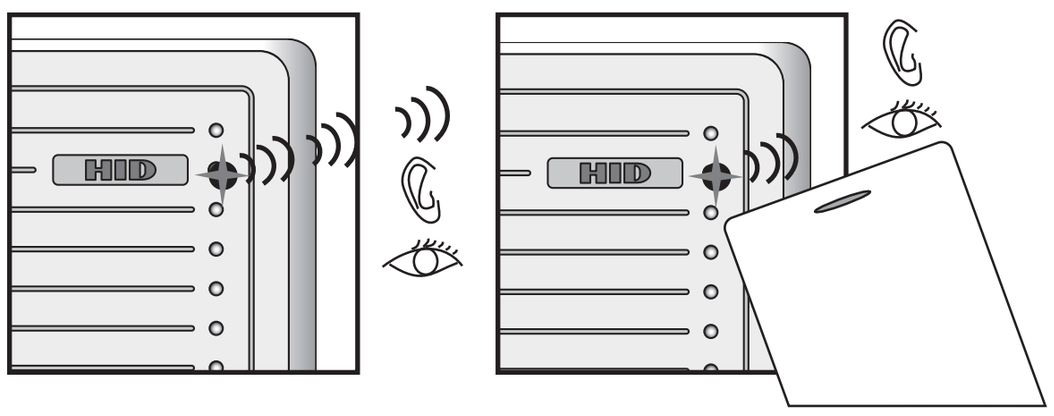

Turn power on
Encienda la unidad
Mettez sous tension
Ligar energia
打开电源／加电
電源を入れる
Strom einschalten
Accendere

Test card
Pruebe la tarjeta
Testez la carte
Placa de teste
测试卡
カードのテスト
Kartentest
Test

FCC WARNING

This device complies with part 15 of the FCC rules.

Operation is subject to the following two conditions:
(1) This device may not cause harmful interference.
(2) This device must accept any interference that may cause undesired operation.

- For regulatory compliance, the drain wire should be disconnected at the power supply end of the cable.
- Changes or modifications not expressly approved by the party responsible for compliance could void the user's authority to operate the equipment.
- The Reader is intended to be powered from a limited power source output of a certified power supply.

ENGLISH Wiring diagram

A	red	+DC (5-16 VDC)
B	black	ground
C	green	Data 0 (data)
D	white	Data 1 (clock)
E	drain	**shield ground
F	orange	*green LED
G	brown	*red LED
H	yellow	*beeper
I	blue	*hold
J	violet	*(card present)

* optional connections
** Drain wire can be "data return" line when a separate power supply is used

ESPAÑOL Cableado

A	rojo	CC+ (5-16 VCC)
B	negro	tierra
C	verde	datos 0 (datos)
D	blanco	datos 1 (reloj)
E	drenaje (drain)	**cable blindado c. tierra
F	naranja	*led verde
G	marrón	*led rojo
H	amarillo	*señal audible
I	azul	*retención
J	violeta	*(presencia de tarjeta)

* Conexiones opcionales
** El cable de drenaje puede convertirse en una línea de retorno de datos si se emplea una fuente de alimentación independiente.

FRANÇAIS Schéma de câblage

A	rouge	+cc (5-16 V cc)
B	noir	terre
C	vert	données 0 ("data")
D	blanc	données 1 ("clock")
E	branch. supp.	**mise à la terre blindée
F	orange	*voyant vert
G	marron	*voyant rouge
H	jaune	*bip
I	bleu	*attente
J	violet	*(carte présente)

* connexions facultatives
** Le branchement supplémentaire peut servir de ligne de « retour de données » en cas d'utilisation d'une alimentation électrique séparée

PORTUGUÊS Diagrama de ligações

A	vermelho	CA+ (5-16 V CA)
B	preto	terra
C	verde	Dados 0 (dados)
D	branco	Dados 1 (clock)
E	dreno	**terra do gabinete
F	laranja	*LED verde
G	marrom	*LED vermelho
H	amarelo	*bíper
I	azul	*reserva
J	violeta	*(placa presente)

* conexões opcionais
**O fio do dreno pode ser a linha de "retorno de dados" quando usada uma fonte de energia separada.

中文 布线图

A	红色	+DC （5-16 VDC）
B	黑色	接地
C	绿色	数据0（数据）
D	白色	数据1（时钟）
E	排流线	**屏蔽接地
F	橙色	*绿色发光二极管
G	棕色	*红色发光二极管
H	黄色	*蜂鸣器
I	蓝色	*保持
J	紫色	（卡在可读范围内）

*可选用连接
**当使用独立电源时，排流线可以作"数据返回"线路

日本語 配線図

A	赤	+DC （5-16 VDC）
B	黒	アース
C	緑	データ0（データ）
D	白	データ1（クロック）
E	ドレイン	**シールドグラウンド
F	オレンジ	*LED緑
G	茶色	*LED赤
H	黄色	*ブザー
I	青	*ホールド
J	紫	（可読領域内のカード）

* オプション接続
**ドレイン接続配線は独立電源を使う際にデータ返送用として使用可能

DEUTSCH Schaltplan

A	Rot	+Gleichstrom (5-16 V)
B	Schwarz	Erde
C	Grün	Daten 0 (Daten)
D	Weiss	Daten 1 (Zeit)
E	Drain	**Schirmerde
F	Orange	*Grüne LED
G	Braun	*Rote LED
H	Gelb	*Signal
I	Blau	*Halten
J	Violett	*(Karte vorhanden)

* optionale Verbindungen
** Drainanschluss kann bei Verwendung separater Stromzufuhr Datenrückleitung sein

ITALIANO Schema di collegamento

A	rosso	+DC (5-16 VDC)
B	nero	terra
C	verde	Dato 0 (dato)
D	bianco	Dato 1 (clock)
E	cavo di terra	**Schermo di terra
F	arancione	*Led verde
G	marrone	*Led rosso
H	giallo	*Ronzatore
I	blu	*Memoria
J	viola	*(scheda attiva)

* Connessioni opzionali
** Il cavo.....può fare da "ritorno dati" se viene utilizzatto un alimentatore separato

реклама
KODOS Максимально надёжное российское оборудование СКУД · СОТ · ОС · ИСБ www.kodos.ru

MULTI-TECHNOLOGY CARD GUIDE

ISOProx II (1386)

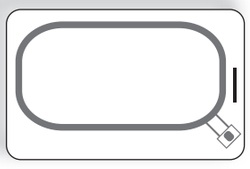

1. 125 kHz Proximity

DuoProx II (1336)

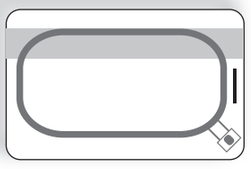

1. 125 kHz Proximity
2. Magnetic Stripe (optional)

Smart ISOProx II (1397)

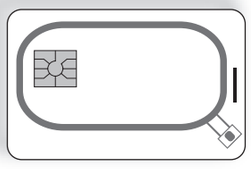

1. 125 kHz Proximity
2. Contact Smart Chip (optional)

Smart DuoProx II (1398)

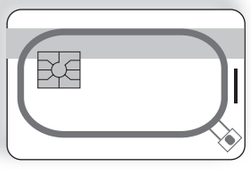

1. 125 kHz Proximity
2. Contact Smart Chip (optional)
3. Magnetic Stripe (optional)

PROXIMITY CARD

Works with existing HID proximity readers. Provides a migration path to a contact-based smart card system.

***iCLASS* Card**

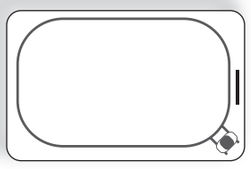

1. 13.56 MHz *iCLASS* contactless smart chip and antenna

***iCLASS* Card**

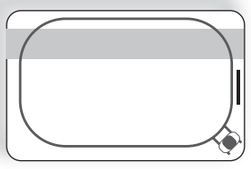

1. 13.56 MHz *iCLASS* contactless smart chip and antenna
2. Magnetic Stripe (optional)

***iCLASS* embeddable Card**

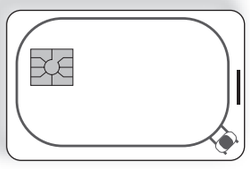

1. 13.56 MHz *iCLASS* contactless smart chip and antenna
2. Contact Smart Chip (optional)

***iCLASS* embeddable Card**

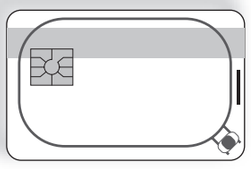

1. 13.56 MHz *iCLASS* contactless smart chip and antenna
2. Magnetic Stripe (optional)
3. Contact Smart Chip (optional)

iCLASS CONTACTLESS SMART CARD

Features 13.56 MHz *iCLASS* contactless smart card technology in various combinations with mag stripe and contact smart chip module.

Contact smart chip module

125 kHz proximity antenna and chip

13.56 MHz *iCLASS* contactless smart chip and antenna

Magnetic Stripe (1, 2 or 3 track, low or high coercivity)

Durable PVC thin card with vertical slot punch and high quality printing surface for photo ID and barcode. (ISO 7816 compliant).

***iCLASS* Prox Card**

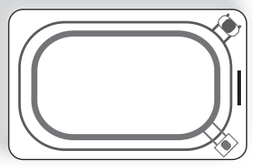

1. 13.56 MHz *iCLASS* contactless smart chip
2. 125 kHz Proximity

***iCLASS* Prox embeddable Card**

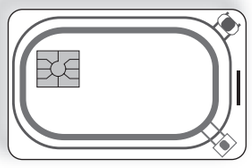

1. 13.56 MHz *iCLASS* contactless smart chip
2. 125 kHz Proximity
3. Contact Smart Chip (optional)

PROXIMITY AND *iCLASS* CONTACTLESS SMART CARD

Works with existing HID proximity and *iCLASS* contactless smart card readers. Provides a migration path to a smart card system.

COMPONENTS

HID Global
9292 Jeronimo Road
Irvine, California
92618-1905 USA

tel:
+1 (949) 598-1600
(800) 237-PROX (7769)
fax:
+1 (949) 598-1690
email:
tech@hidcorp.com

www.hidcorp.com

5455-910 Rev. D 06/06

INSTALLATION
INSTALACIÓN
INSTALLATION
INSTALAÇÃO
安装
取り付け
INSTALLATION
INSTALLAZIONE

PROXPRO II READER 5455

An ASSA ABLOY Group company

ASSA ABLOY

proxpro_II_install_manual.indd 2 6/27/06 11:29:16 AM

- 1 reader
- 2 #6-32x1" self tapping
- 1 instalation manual

Recommended

- 9 wire splices
- 1 grommet
- 1 cable, 5-9 conductor 22AWG shielded
- Linear DC power supply

Specifications

- Voltage range: 5.0-16.0 VDC
- Current: max. average - 40mA
- Corriente: promedio máx - 40 mA
- 500' max. cable distance to host

- 1 lector
- 2 módulos de autodeterminación del N.º 6 81x2,5cm (32x1 pulg) tipo "T"o 23
- 1 manual de instalación

Recomendable

- 9 empalmadores
- 1 grandela
- 1 cable, conductor (5-9) bilindado calibre 22 AWG
- Fuente de alimentación lineal CD

Especificaciones

- Intervalo de voltaje 5-16 VCC
- Corriente: promedio máx - 40 mA
- Longitud máx. del cable al sistema central: 150 m.

- 1 lecteur
- 2 vis
- autotraudauses n° 6 ; 81 x 2,5 cm, de type T ou 23
- 1 manuel d'installation

Recommandations

- 9 épissures de câble
- 1 passe-fil
- 1 câble blindé conducteur 5-9 fils de diamètre 0,35 mm2
- Alimentation linéaire CC

Spécifications

- Plage de tension : 5,0 - 16,0 VCC
- Courant : moyen max. : 40 mA
- Distance de câblage max. avec le système central : 150m

- 1 leitor
- 2 cabos Tipo T ou 23 n° 6 (81x2,5 cm) auto-desivos
- 1 manual de instalação

Recomendado

- 9 fios conectores
- 1 ranel isolante
- 1 cabo, conductor 5-9 22 AWG, bilindado
- Rede elétrica CA linear

Especificações

- Amplitude de voltagem- 5,0 V CA-16,0 V CA
- Media de corrente máx. 40 mA
- 150 m de distância máxima do cabo ao host

- 1 小读卡器
- 2 #6-32 x 1英寸 (81 x 2.5cm)
- 1 张安装指南

建议采用

- 9 个电线接头
- 1 个垫圈
- 1 根屏蔽电缆, 5 至 9 线芯 22AWG
- 线性直流电源

规格

- 电压范围 5.0-16.0 VDC
- 电流 最大平均电流 40mA
- 电缆主机最远距离为 500英尺(150米)

- リーダ 1
- 6-32×1インチ (81×2.5cm) T型または23型 ヒルプラグビンワッシャ 2
- 取扱説明書 1

推奨

- スプライス 9
- グロメット 1
- 5-9芯ケーブル ドケーブル 22AWG 1
- リニアDC電源

規格

- 電圧範囲 5.0-16.0 VDC
- 電流 最大平均40mA
- 本体までの最大ケーブル長 500フィート(150メートル)

- 1 leitore
- 2 #6-32x1" self tapping
- Manuale di installazione

Raccomandato

- Connettore 9 poli
- 1 pressacavo
- 1 cavo, 5-9 conduttore 22AWG schermato
- alimentatore lineare DC

Specifiche

- Range di lavoro: 5.0-16.0 VDC
- Corrente: Max 40 mA
- Max 500 mt di distanza dall'host

- 1 leser
- 2 #6-32x1" Zoll (81x2,5cm) gewindefurchende Schrauben Typ T
- 1 installerung handbuch

Empfohlen:

- 9 Kabelspleißer
- 1 Gummiclichtung
- 1 Kabel, 5-9 Leiter 22 AWG, abgeschirmt
- Linearer Gleichstrom-versorgung

Spezifikationen

- 5,0 V Gleichspannung - 16,0 V Gleichspannung
- 40 mA maximale durchschnittliche spannung
- 150 m maximale Kabelentfernung zum Host

PARTS COMPONENTES PIÈCES PEÇAS 部件 品部 TEILE COMPONENTI

КОДОС Максимально надёжное российское оборудование СКУД · СОТ · ОС · ИСБ www.kodos.ru
реклама