BOLID
SECURITY SYSTEMS

FIRE AND ALARM CONSOLE

S2000M

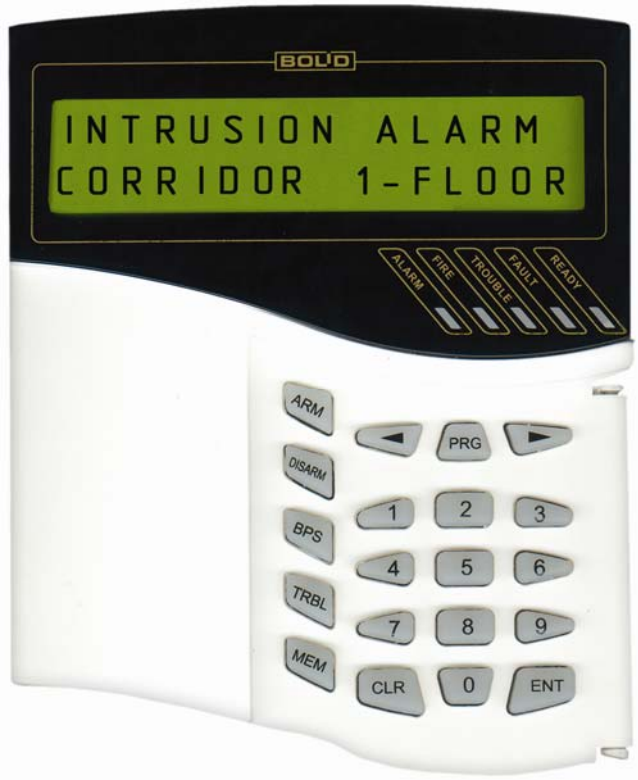

Maintenance guide

SEC.RU | Короткий путь к информации
Скачано с sec.ru

TABLE OF CONTENTS

1 Description of the product and its operability 4
1.1 Purpose 4
1.2 Specifications 5
1.3 Delivery set 14
1.4 Description the product and capabilities 14
2 Maintenance 15
2.1 Preparation the product 15
2.1.1 General information 15
2.1.2 Connection console and devices to RS-485 interface instructions 16
2.1.3 Setting device configuration parameters 18
2.1.4 Address setting of addressable expanders 19
2.1.5 Printer connection to console or ‘ARM S2000’ 19
2.1.6 Using the console for “ARM Orion” redundancy 20
2.1.7 Console configuring 25
2.1.7.1 General information 25
2.1.7.2 Adding devices into console database and partition creation 26
2.1.7.3 Setting partition control rights and password programming 27
2.1.7.4 Setting control by system relay outputs 29
2.1.7.5 Setting message transmission 30
2.1.7.6 Entry zone settings 31
2.1.7.7 Setting user messages 31
2.1.7.8 Controlling ‘S2000-BI’ devices settings 31
2.1.7.9 Using the console for creating of systems controlling gas, powder or aerosol fire extinguishing installations based on "S2000-ASPT" devices 32
2.1.7.10 Using the console with sprinkler or drencher extinguishing units based on devices "POTOK-3N" 33
2.1.7.11 Using the console with the phone communicator "S2000-IT" 33
2.1.8 Console mounting 34
2.1.9 Prevention of the accidents at device installation 34
2.1.10 Console first starting 34
2.2 Using console 34
2.2.1 Displaying, viewing and printing device messages 35
2.2.2 Partition arming and disarming 37
2.2.2.1 Console controlling of partitions 37
2.2.2.2 Partition control at ‘S2000-K’ keyboards 39
2.2.2.3 Touch Memory and Proximity card partition control 39
2.2.3 Device control functions 39
2.2.3.1 Arming/disarming control of device alarm loops 39
2.2.3.2 Device alarm reseting 41
2.2.3.3 Manual external device outputs control 41
2.2.3.4 ‘S2000-ASPT’ device control 42

SEC.RU | Короткий путь к информации Скачано с sec.ru

2.2.3.5 Request for loop state 43
2.2.3.6 Alarm loop resistance measurement 43
2.2.3.7 Console date and time setting 44
2.2.3.8 Printing event buffer 45
2.2.3.9 'S2000-IT' phone communicator message buffer cleaning 45
2.2.3.10 Alarm message indication reset 45
2.2.4 Device and console programming functions 46
2.2.4.1 Date and time settings and clock correction 46
2.2.4.2 RS-485 device address changing 47
2.2.4.3 2-wire devices adresses changing and programming 47
2.2.4.4 Console extra settings 48
2.2.4.5 Password management 49
2.2.4.6 Console address setting in prorgamming mode 51
2.2.4.7 Console address setting in personal computer work mode 51
2.2.4.8 Console RS-232 interface operative mode settings 51
2.2.4.9 The ring RS-485 interface operative mode settings 52
2.2.4.10 Console entering into programming mode 53
2.2.5 Reset settings to default values 53
2.2.6 Console version update 54
3 STORAGE 54
4 TRANSPORTATION 54
5 CERTIFICATION INFORMATION 54
6 INFORMATION ABOUT MANUFACTURER 54
7 WARRANTY 55
Appendix A 'S2000M' console dimensions 56
Appendix B Zone status list 57
Appendix C The list of messages being displayed 61

SEC.RU | Короткий путь к информации Скачано с sec.ru

This maintenance guide is intended to help you to study the operation and maintenance principles of Fire and Alarm Console 'S2000M' version 2.04 (elsewhere the console). Console version is shown on the label on the processor, which can be seen when console back cover is open.

1 Description of the product and its operability

1.1 Purpose

1.1.1 'S2000M' fire and alarm console is designed to work as part of fire-alarm system. It checks device states and gathers information, logs system events, indicates alarms, controls arm, controls disarm, controls by automatics. Console joins connected to it devices in one system, providing interaction between each other. It is necessary for using 'Signal-20P', 'S2000-KDL', 'S2000-SP1', 'S2000-BI', 'S2000-K', 'S2000-IT' devices.

1.1.2 Console can be connected to receive-checking devices 'Signal-20', 'Signal-20' version 02, 'Signal-20P', 'S2000-4', 2-wired line 'S2000-KDL' controllers, keyboards 'S2000-K' and 'S2000-KC', relay's 'S2000-SP1' modules, 'S2000-BI' indication blocks, 'S2000-IT' phone informators, 'S2000-ASPT' extinguish control devices, checking-start 'S2000-KPB' units, 'S2000-2' access control devices. Devices and console are jointed in the system through RS-485 interface. In the system console plays role of central controller, which gathers information from connected devices and controls by arm/disarm alarm loops of devices and by system outputs (relay outputs or 'open collector' outputs). **One can be only one console 'S2000M' in the system!** Receive-checking devices 'Signal-20', 'Signal-20' version 02, 'Signal-20P', 'S2000-4' analyze the state of the alarm loop, control by their outputs, transmit to the console through RS-485 interface information about state of alarm loop and allow arm/disarm alarm loop by console commands through RS-485 interface. Controller 'S2000-KDL' analyzes the state of addressable detectors and connected via 2-wire addressable communication line expanders, transmits the status information to the console and allows to arm/disarm them by console command. Keyboard 'S2000-K' is design for additional partition control points and word under console control. It also allows displaying transmitted by keyboard messages on the liquid-crystal indicator with alarm message sound indication. LED 'S2000-KS' keyboard is also designed for additional control points. It can show up to 20 partitions on the LED indicators. Signal-start 'S2000-SP1' unit allow the console controlling by their relay outputs through RS-485 interface and is design to contact system relay outputs. 'S2000-BI' indication block is design for indication at built-in LED indicators and sound indicator states of system partitions. 'S2000-IT' phone phone communicator is design to transmit console messages through phone lines in form of voice or pager messages, and also ADEMCO ID Contact format messages.

1.1.3 Console displays at liquid crystal display (LCD) messages about fires, alarms, faults, arm, disarm and other system events. There is the opportunity of sound alarm message signaling. Console can log device messages on printer with c sequential RS-232 interface (for example, EPSON LX-300, LX-300+). Console keeps messages in nonvolatile event buffer. Its content can be viewed on LCD. Console may print buffer content on the printer. Console may transmit messages to the 'S2000-K' keyboards for displaying and to the phone informators for transmission through phone.

1.1.4 Console has set of standard messages, displayed on LED indicators and printed, and also allows set non standard alarm loop message displaying.

Console allows one to control by arm/disarm of any alarm loop of connected devices, and also check alarm loop states. Access to the functions is password protected.

SEC.RU | Короткий путь к информации
Скачано с sec.ru

1.1.5 Console may logically group alarm loops in ***partitions***. Partition is a set of alarm loop that is controlled as one unit. This gives next advantages:

– Arm/disarm require fewer users actions take less time, and probability of operators mistake is decreased also. If need to arm the large number of ALs, especially if there are ALs of different devices, joining the alarm loop give very significant event;

– User can arm/disarm just partitions, authorized to him;

– Partition arm/disarm can be controlled not only at console, but also at connected 'S2000-K' and 'S2000-4' devices;

– New opportunity to organize the system outputs (relay's) is added;

– 'S2000-BI' units can be used for partitions state indication.

There are the restrictions:

– Number of alarm loop, that can be included in partitions, is limited;

– Console has to be configured with help of personal computer.

1.1.6 Console allows group partitions in the groups. Partitions group can be controlled (Arm/disarm), and also display their states on indication 'S2000-BI' blocks and LED 'S2000-KS' keyboards.

1.1.7 Console allows one to control by partition arm/disarm and to view their states. Access to the functions is password protected (PIN-code, Touch Memory key or Proximity card). Partitions that authorized to user, and partition control rights (arm/disarm permission), are determined by level of its password. Console indicates arm/disarm operation result. Partition control possible both at console (PIN-code), and at connected to console 'S2000-K' keyboards (PIN-code) and devices'S2000-4' (Touch Memory key or Proximity card).

1.1.8 Console may use 'S2000-BI' devices for partitions state indication.

1.1.9 Console synchronizes time and date in devices. It is necessary for normal time window operability in 'S2000-4' and 'S2000-2' devices. Console provides connection between 'S2000-2' device. It is necessary for normal operability network Anti pass back mode (second passing prohibition) in access control system on the basis of 'S2000-2' devices.

1.1.10 Console controls by 'S2000-SP1' device relay outputs. These output we will call system outputs (in opposite to the alarm panel local outputs, controlled by devices itself). System output reaction depends on state of connected partitions and control program. System relay outputs can be used for control by light and sound notificators, operational device switching, alarm message transmitting to the CGP. Except 'S2000-SP1' device outputs 'S2000-KPB', 'S2000-4', 'Signal-20P' and 'Signal-20' series 02 device outputs can be used as system outputs.

1.1.11 Console allows changing connected through RS-485 interface device addresses, and also programming and changing address expanders addresses 'S2000-AP1', ' S2000-AP2' and address notificators 'IPR 513-3A', 'S2000-SMK', 'DIP-34A ver.01', 'S2000-IP ver.01', connected to the 'S2000-KDL' controller two wired connection line. Programming functions are protected by password.

1.1.12 Console figured for 24-hour work.

1.1.13 Console must be protected from action of atmospheric condensations and mechanical damage.

1.1.14 Temperature range for console is from 274 to 313 K (from +1 to +40 ^{O}C).

1.2 Specifications

1.2.1 Voltage of direct current power supply of the console is from 10,2 to 28,4 V.

1.2.2 Consumed current in standby mode is: if supply voltage 12 V - 70 mA, if supply voltage is 24 V - 35 mA.

1.2.3 Liquid crystal two line indicator, 16 symbols in the line, with green highlight.

SEC.RU | Короткий путь к информации Скачано с sec.ru

1.2.4 Length of the RS-485 communication line is no more then 4000 m.

1.2.5 Length of the RS-232 communication line is no more then 20 m.

1.2.6 Values of created by console radio noise are fewer standards.

1.2.7 Console is stable to the electromagnetic noise.

1.2.8 Average work time is below 20000 hr that correspond the probability of non-break work 0,95 per 1000 hr.

1.2.9 Average console life time is 10 years.

1.2.10 Mass - no more then 0,3 kg.

1.2.11 Dimensions - 140×114×25 mm.

1.2.12 Console's construction satisfies fire rules in the case of malfunction and in the case of violate of maintenance rules.

1.2.13 Number of connected to console through RS-485 interface devices is no more 127.

1.2.14 Current system event console shows on the indicator, print and save in nonvolatile buffer. Messages include event name (shown in appendix D), time (hour, minutes, seconds) and data (day, month). They can also include information about message source (device address, loop number, reader or relay), number and text partition description, number and user text description. Event buffer keep up to 1023 last events. Buffer is ring, i.e. last message is saved instead the oldest. Console can print bath all current messages, but also message categories. There are following categories: 'FIRES', 'ALARMS', 'FAULTS', 'ARM/DISARM', 'LOOP ARM/DISARM', 'ACCESS', 'RELAY', 'SYSTEM INFO', 'AUXILIARY'. Full event list presents (shown) in appendix D. Printer prints messages immediately at receiving. If console worked some time without printer, then after printer connection saved in buffer events will be printed automatically. Also there is a command for printing whole event buffer.

1.2.15 Console allows setting displaying and printing events from device alarm loops and addres notificators. Obligatory condition – these loops should be saved in console database. It has to be set message name, console message receiving sound signal, alarm level and has message to the one of the categories. Message title is an arbitrary text line with length up to 16 symbols. Sound signal is settled by selection from list of standard signals. Alarm level determines message displaying priority on the LED console at receiving different alarm messages. Through message category one can set save the message in the console buffer, display on the LED, print or transmits to the 'S2000-K' keyboards and 'S2000-IT' informators.

1.2.16 Console can translate system messages to the 'S2000-K' keyboards and 'S2000-IT' informators. For any of the devices permitted message categories and partition list can be set.

1.2.17 Partition number in the system is 511. Partition group number is up to 128. The number of alarm loops, that can be grouped in partitions are up to 2048. Alarm loops can be included in partitions in arbitrary order, but any alarm loop can be included in one partition only. Any partition can be included in any group, or in few groups, up to maximal number 128. For each partition or partition group text description from 16 symbols can be set. This description will be included in printing of the events and can be seen on the console LED.

1.2.18 Console has passwords system for access restriction to the arming/disarming and programming functions. Password can has from 1 to 8 digits. Console allows set passwords for 2047 users. For each user text description (name) from 16 symbols can be set. Name or password order number (from 1 to 2047) identify user in the system. User name is included in the event printing and can be seen on console LED.

Password with order 1 is engineer password. It is unique password with the programming function access. Engineer password owner can configure console and device parameters, setting

SEC.RU | Короткий путь к информации Скачано с sec.ru

addresses of devices and address expanders, set, change and remove user passwords, change own password, setup and change console configuration for work with the partitions and relay outputs at personal computer using program '**pprog.exe**' ver. **2.04**. This password has no device and partition control rights! Engineer password can has from 1 up 8 digits. Default value is - <123456>. Change it before starting device operation! Console allows reset the password in default value if it was forgotten.

User passwords can have numbers from 2 to 2047 and designed for arming/disarming control. PIN - codes, and Touch Memory keys and Proximity cards can be used as password. PIN – code is digit code, input from the keyboard. Maximal PIN default length is 4 digits, but can be changed in range from 1 to 8 digits. Touch Memory key and Proximity cards control is made by readers, connected to the 'S2000-4', 'S2000-2', 'Signal-20P SMD' and 'S2000-KDL' devices.

Each user password has access level. According to level password can have partition control rights or device control rights.

Access levels for partition control are determined accessible partitions and permitted for control actions (partition arming/disarming). It can be set up to 252 access levels (numbers from 1 to 252). Partition control rights are described in the item.

Note – Access level can have control rights for any partition number (up to 511) and partition groups (up to 128), but up to 8 access levels can have one partition or group.

Console has three default access levels for device control: 'ARM and DISARM', 'ARM w/o DISARM', 'MAX AUTHORITY'. Access level 'ARM w/o DISARM' gives the right for alarm loop individual or group arming, and also alarm reset and alarm loop state request. Access level 'ARM and DISARM' gives also the right for alarm loop individual or group arming and disarming. Access level 'MAX AUTHORITY' has all control functions rights. Comparing with the level 'ARM and DISARM' there are accessible general arming and disarming, manual device output control, printing buffer events, setting time and data, request ADC. Device control functions are described in item.

Note – Access to the control functions is protected by passwords, if option 'CODE REQUIRED' is on. If option 'CODE REQUIRED' is off loop control functions are accessible without password.

By default console has one user password, with number 2, it has value <1234> and access level 'MAX AUTHORITY'.

Console allows setup password owner to add, remove and change user passwords. Users can change own password by console.

1.2.19 States of LED indicator 'READY' (green) in different modes of work through interface RS-232 are shown in the table 1.

1.2.20 Console provides states indication of all system partitions on LED indicators 'ALARM', 'FIRE', 'TROUBLE' and 'FAULT' according to tables 2 - 5. Indicator's colour is red.

1.2.21 Console sound signals are shown in the table 6.

Table 1 ***Indicator 'READY' (green)***

Mode	State	Indication
Work with printer	Any	On
Work with computer	Norm	On
	No connection with computer through RS-232	Blinks with frequency 1 Hz
Programming mode, Mode PI	Computer does not poll devices	Off
	Computer polls devices	On, if computer sends data to the device, else off

SEC.RU | Короткий путь к информации Скачано с sec.ru

Table 2 ***Indicator 'ALARM' (red)***

State	Indication
Norm	Off
SILENT ALARM	Blink with frequency 2 HZ
ALARM	Blink with frequency 1 HZ
INTRUSION ALARM	Blink with frequency 4 HZ

Table 3 ***Indicator 'FIRE' (red)***

State	Indication
Norm	Off
FIRE	Blink with frequency 2 HZ
ATTENTION	On for ¼ c frequency 1 HZ

Table 4 ***Indicator 'TROUBLE' (red)***

State	Indication
Norm	Off
NOT ARMING	Blink with frequency 1 HZ
LOOP OPEN CIRCUIT LOOP SHORT CIRCUIT CONFIGURATION ERROR OPEN RELAY OUTPUT RELAY OUTPUT SHORT CIRCUIT BATTERY FAILED AC POWER FAILED POWER FAILED	On for 1/8 c frequency 1 HZ

Table 5 ***Indicator 'FAULT' (red)***

State	Indication
Norm	Off
DISCONNECTED ALARM LOOP RELAY DISCONNECTED 2-WIRE LINE SHORT CIRCUIT 2-WIRE LINE TROUBLE ENCLOSURE TAMPERING	Blink with frequency 2 HZ

Table 6 ***Inner sound notificator***

Event or state	Content
Norm	Notificator off
Button pressed	Short sound signal. Notificator is off, if alarm was on
Successful operation	Two short signals (signal 'Confirmation')
Unsuccessful operation	Long sound signal (signal 'Error')
'Intrusion alarm' or 'Silent alarm' messages are received	Sound signal 'Alarm' (interrupted sound signal with signal duration approximately equal to the pause duration)
'Fire prealarm' message is received	Sound signal 'Attention' (periodic sequence of alternate short and long signals)
'Fire alarm' message is received	Sound signal 'Fire alarm' (interrupted sound signal with long signals and short pauses)
'Tamper alarm', 'device restart' messages are received, disconnection the device is occurred	Sound signal 'Break' (interrupted high frequency sound signal)
'Loop trbl open', 'loop trbl short', 'fire trouble', '2wire line open', '2wire line short', '2wire line short', 'power failed', 'battery failed', 'AC power failed' messages are received	Sound signal 'Fault' (interrupted sound signal with short beeps and long pauses (2,5 s) between signals)

SEC.RU | Короткий путь к информации
Скачано с sec.ru

Note - Alarm indication at LED indicator and sound annunciator is made only if option ‘ALARM SOUND’ is on. Default option setting is ‘on’.

1.2.22 Console allow user to control by relay outputs of signal-start ‘S2000-SP1’ blocks, and also by ‘Signal-20P’, ‘S2000-4’, ‘Signal-20’ series 02 device outputs. Total number of controlled outputs is up to 255. Outputs are controlled by given control programs according to the states of the connected partitions. Relay output can be connected with any number of partitions (up to 255), and partition can be connected with arbitrary number of the outputs (up to 255). Console support 35 different relay control programs. Control program determines state of output at different states of connected with it partitions. Relay control program description is shown in the table 3. Description of partition states are shown in the appendix C. Partitions, partition links with outputs and control programs are setup at customizing (see. item. 2.1.7.4).

Table 7 ***Relay executive programs***

Number	Program name	Program description
1	‘On’	If ‘Intrusion alarm’ or ‘Fire alarm’ - ON; else OFF output.
2	‘Off’	If ‘Intrusion alarm’ or ‘Fire alarm’ - OFF; else ON output.
3	‘On for a time’	If ‘Intrusion alarm’ or ‘Fire alarm’ - ON for a time; else OFF output.
4	‘Off for a time’	If ‘Intrusion alarm’ or ‘Fire alarm’ - OFF for a time; else ON output.
5	‘Blinking. Normal state OFF’	If ‘Intrusion alarm’ or ‘Fire alarm’ - blink (0,5 s ON, 0,5 s OFF); else OFF output.
6	‘Blinking. Normal state ON’	If ‘Intrusion alarm’ or ‘Fire alarm’ - blink (0,5 s ON, 0,5 s OFF); else ON output.
7	‘Blinking for a time. Normal state OFF’	If ‘Intrusion alarm’ or ‘Fire alarm’ - blink (0,5 s ON, 0,5 s OFF) during given time; else OFF output.
8	‘Blinking for a time. Normal state ON’	If ‘Intrusion alarm’ or ‘Fire alarm’ - blink (0,5 s ON, 0,5 c OFF) during given time; else ON output
9	‘LAMP’	If ‘Fire alarm’, ‘Fire prealarm’, ‘Intrusion alarm’, ‘Entry alarm’ or ‘Arm failed’, then blink (0,5 s ON, 0,5 s OFF); if ‘Disconnected alarm loop’, “Relay disconnected”, “Fire trouble”, “Loop open circuit”, “Configuration error”, “Open relay output ”, “Relay output short circuit”, “Battery failed”, “AC power failed”, “Power failed”, “2-wire line short circuit” or “2-wire line trouble”, then blink (0,25 s ON, 1,75 s OFF); if there is at least one armed zone, then ON output; if all zones are disarmed, then OFF output.
10	‘Alarm output 1’	If all partitions are armed, then ON (close) outputs; else OFF (open) output.
11	‘ASPT’	ON for a given time, if at least two zones in partition have ‘Fire alarm’ status and there are no zones having states "Auxiliary alarm", "Relay disconnected", "Open relay output", "Relay output short circuit". When the failure removed the relay output will be ON

SEC.RU | Короткий путь к информации Скачано с sec.ru

Number	Program name	Program description
12	‘SIREN’	If ‘Fire alarm’ then blink given time (1,5 s ON, 0,5 s OFF); if ‘Attention’, then blink given time (0,5 s ON, 1,5 s OFF); if ‘Intrusion alarm’, then ON for a given time; else OFF output.
13	‘Fire output’	If ‘Fire alarm’ or ‘Fire prealarm’, then ON (close) outputs; else OFF (open) output.
14	‘Output FAULT’	If there are zones in the states ‘Disconnected alarm loop’, “Relay disconnected”, “Fire trouble”, “Loop open circuit”, “Configuration error”, “Open relay output ”, “Relay output short circuit”, “Battery failed”, “AC power failed”, “Power failed”, “2-wire line short circuit” or “2-wire line trouble” or “Disarmed”, “Disarmed and ready” “Disarmed and not ready”, or “Arming has failed”, then OFF (open) output.; else ON (close) output.
15	‘Fire LAMP’	If ‘Fire alarm’, ‘Fire prealarm’, ‘Intrusion alarm’, ‘Entry alarm’ or “Arming has failed”, then blink (0,5 s ON, 0,5 s OFF); if ‘Disconnected alarm loop’ or ‘Fire alarm’, then blink (0,25 s ON, 1,75 s OFF); if state of all relay associated zones is ‘Zone armed’, then ON; else OFF output.
16	‘Alarm output 2’	If all zones are armed or disarmed, then ON; else OFF output.
17	‘Turn on for a given time before arming’	If at least one zone is in “Arming delay” state, then ON for a given time; else OFF output.
18	‘Turn off for a given time before arming’	If at least one zone is in “Arming delay” state, then OFF for a given time; else ON output.
19	‘Turn on for a given time when arming’	If at least one zone is armed, then ON for a given time; else OFF output.
20	‘Turn off for a given time when arming’	If at least one zone is armed, then OFF for a given time; else ON output.
21	‘Turn on for a given time when disarming’	If at least one zone is disarmed, then ON for a given time; else OFF output.
22	‘Turn off for a given time when disarming’	If at least one zone is disarmed, then OFF for a given time; else ON output.
23	‘Turn on for a given time if arming has failed’	If at least one zone is in the state ‘Arm has failed’, then ON for a given time; else OFF output.
24	‘Turn off for a given time if arming has failed’	If at least one zone is in the state ‘Arm has failed’, then OFF for a given time; else ON output.
25	‘Turn on for a given time when auxiliary alarm’	If at least one zone is in the state ‘Auxiliary alarm’, then ON for a given time; else OFF output.

SEC.RU | Короткий путь к информации
Скачано с sec.ru

Number	Program name	Program description
26	‘Turn off for a given time when auxiliary alarm’	If at least one zone is in the state ‘Auxiliary alarm’, then OFF for a given time; else ON output.
27	‘Turn on when disarmed’	If at least one zone is disarmed, then ON; else OFF output.
28	‘Turn off when disarmed’	If at least one zone is disarmed, then OFF; else ON output.
29	‘Turn on when armed’	If at least one zone is armed, then ON; else OFF output.
30	‘Turn off when armed’	If at least one zone is armed, then OFF; else ON output.
31	‘Turn on when auxiliary alarm’	If at least one zone is in the state ‘Auxiliary alarm’, then ON; else OFF output.
32	‘Turn off when auxiliary alarm’	If at least one zone is in the state ‘Auxiliary alarm’, then OFF; else ON output.
33	‘ASPT-1’	ON for a given time, if at least one zone in partition have ‘Fire alarm’ status and there are no zones having states "Auxiliary alarm", "Relay disconnected", "Open relay output", "Relay output short circuit". When the failure removed the relay output will be ON
34	‘ASPT-A’	ON for a given time, if at least two zones in partition have ‘Fire alarm’ status and there are no zones having states "Auxiliary alarm", "Relay disconnected", "Open relay output", "Relay output short circuit". When the failure removed the relay output will not be on
35	‘ASPT-A1’	ON for a given time, if at least one zone in partition have ‘Fire alarm’ status and there are no zones having states "Auxiliary alarm", "Relay disconnected", "Open relay output", "Relay output short circuit". When the failure removed the relay output will not be on
36	"Turn on with temperature increasing"	ON for a given time when the temperature has exceeded "temperature high" threshold (in “High temperature” status); else OFF output.
37	" Turn on with temperature decreasing "	ON for a given time when the temperature has being below "temperature low" threshold (in “Low temperature” status); else OFF output.
38	"Turn on during launching delay"	ON for a given time during launching delay counting before automatic fire extinguishing system starting (in "Launching delay" state); else OFF.
39	"Turn on during launching"	ON for a given time if launching pulse for automatic fire extinguishing system has been given ("Launching" state); else OFF.
40	"Turn on during extinguishing"	ON if launching has been confirmed (in "Extinguishing" state); else OFF.

SEC.RU | Короткий путь к информации Скачано с sec.ru

Number	Program name	Program description
41	"Turn on if launching failed"	ON if launching has been failed (in "Launch fault" state); else OFF.
42	"Turn on when autoextinguishing is on"	ON in "Auto extinguishing" state; else OFF.
43	"Turn off when autoextinguishing is on"	OFF in "Auto extinguishing" state; else ON.
44	"Turn on if autoextinguishing is off"	ON in "Manual extinguishing" state; else OFF.
45	"Turn off when autoextinguishing is off"	OFF in "Manual extinguishing" state; else ON.

Comments for executive programs:

1) Devices 'S2000-SP1' ver **1.20** and 'S2000-4' ver **1.07** support extended relay output controlling, e.g, delayed controlling or control time being given in the range from 0 to 8191,875 seconds and 1/8 second resolution. In addition these devices support various types of blinking differing by period and pulse ratio. If the equipment does not support extended output relay control, it cannot allow delayed controlling, blinking can be realized with frequency 1 Hz and pulse ratio 2 only, control time can be given in range from 0 to 255 seconds with 1 second resolution.

2) One can give the the delayed controlling for all programs except №№ 9, 10, 13, 14, 15, 16.

3) Outputs with permanent executive programs (e.g, "On" or "Alarm output") are turned on (both for opening and closing) when meeting the appropriate conditions and retain in such state until the condition avoids. After condition disapearing relay outputs return to initial state. On the contrary to permanent executive programs outputs with time given programs (that is with limited control time) return to initial state not only when disappearing conditions but if the time has elapsed. Time given programs will operate identically with permanent programs if given time has the maximum value being equal 8191,875 second.

4) Programs №№ 11, 33, 34 and 35 are designed to control the fire automatic equipment including autoextinguishing devices. According to the autoextinguishing systems requirements one can activated the extinguishing equipment on premises when there is fire alarm in two independent fire alarm loops checking this premises. To avoid the leak of extinguishing compound (gas, powder) it is allowed to start the equipment only if all doors are opened. In addition it is necessary to check the light and audible annunciators control circuits and block up the fire extinguishing launching when such circuits troubles. The door state is controlled by means of alarm loops known as *auxiliary*. If such loop is broken (i.e. the door is opened) it takes the "Auxiliary loop alarm" status but if close door condition restored this loop automatically restore its state after *auxiliary loop recovery time*. To control light and audible annunciators one can use "S2000-KPB" outputs being able to control short or open failures of load circuit. Output executive programs are realized so that launching is blocked up if auxiliary loop or output circuit is failed. As mentioned above to create automatic fire extinguishing controlling the premises is to be controlled by at least two fire alarm loops, the doors are to be monitored via auxiliary alarm loops and annunciators are to be controlled by means of "S2000-KPB". This loops and outputs form one fire partition associated with one or more outputs designated to give the launching pulse and being controlled by "ASPT" program. It two or more fire loops in partition alarm the relay output turns on with given time and delay provided all doors are closed and annunciators are operative. If at least one door is opened or at least one annunciator circuit is failed the relay does not start. If two latter conditions disappear with fire alarm being retain then outputs

SEC.RU | Короткий путь к информации Скачано с sec.ru

supplied with №11 (“ASPT”) and №33 (“ASPT-1”) programs will be turned on with given delay, but outputs supplied with №34 (“ASPT-A”) and №35 (“ASPT-A1”) programs will not be turned on (in the last case will be turned on if control time restrictions are not given). There are other distinctions between programs. Starting of relay outputs supplied with №34 and №35 programs is blocked up if there are blocking conditions in any associated partition. On the contrary output supplied with №11 or №33 programs will be turned on if there is at least one partition met the launching condition (specifically there are fire alarms and there are no broken auxiliary alarm loop and failed outputs) without regard to another concerning partition states.

5) Executive programs №11 (“ASPT”) and №34 (“ASPT-A”) allow to turn output on when either two smoke or heat detectors in partition have been activated or a manual fire detector (IPR) has been started if the type “Manual launch” for IPR controlling zone was configured.

6) Output ‘FAULT’ is used to control the operative status of fire partitions. Output opening follows with:

- ✓ short circuit, open circuit or fault of fire detector,
- ✓ short or open circuit of output relay,
- ✓ connection loss between the console and RS-485 lined control receiving device or relay unit, or between 2-wire connected addressable detector or relay unit and “S2000-KDL” controller,
- ✓ short circuit or trouble of 2-wire addressable line,
- ✓ primary or backup power supply troubles,
- ✓ “Disarmed” or “Arming has failed” status of partition.

As this output is normalle closed the relay unit power down or open relay output circuit are considered to be fault signals.

7) “Fire LAMP” output differs from “LAMP” by turning on only when all assigned partitions are armed.

8) Program №17 (‘Turn on for a given time before arming’) can be used for 4-wired detectors auto reset when arming. To do this the detectors are powered through normally closed contact of ‘S2000-SP1’ device relay output. This output is given by the executive program №17 and control time sufficient to reset detectors. For 4-wired detectors alarm loops the arming delay is to be given. Arming delay must be more then the sum of resetting time and maximum restore time of detectors after power reset. As a result when arming command is given the relay will turn on for given time with 4-wired power circuits being broken and thus reset activated detectors.

9) Programs № 38-45 can be used in gas, powder or aerosol fire extinguishing systems based on “S2000M-ASPT” devices. These programs allow turning on or off device outputs both for given time or as long as on/off condition is in effect. Controlling without time restrictions is realized by givening the maximum control time value being egual to 8191,875 seconds.

Program № 38 "Turn on during launching delay" can be used for activating audible alarms and light boxes “GET OUT!” and “KEEP OUT!” when launching delay.

Program № 39 also can be used in gas extinguishing system for several areas with the common extinguishing installation with each area being protected with singular “S2000-ASPT” device. “S2000-ASPT” devices control fire detector statuses and in case of fire generate launching message and open gaseous discharge valve to protected area. The console can activate the fire extinguishing system in “Launching” condition for any area giving out launching pulse to output provided with executive program № 39 "Turn on during launching".

Program № 41 "Turn on if launching failed" can be used for launching of redundant fire extinguishing installation.

1.2.23 Console allows assigning up to 32 entrance zones. Entrance zone represents alarm loop with alarm delay ability. Alarm delay permit to enter the protected area through entrance zone without immediate alarm and to disarm the premises. The delay factor can be given from 0 to 254 s. Entrance alarm loop being broken the console gets out the message ‘ENTRY ALARM’.

SEC.RU | Короткий путь к информации Скачано с sec.ru

If after delay elapsing entrance zone has been retaining in alarm, that is was not armed or disarmed, the console generates “INTRUSION ALARM” message. Relay controlling programs operate ‘INTRUSION ALARM’ and ‘ENTRY ALARM’ states by different ways (see Table 7). For example, ‘SIREN’ programmed output is not turned on in ‘ENTRY ALARM’ partition state with ‘Alarm output’ having being opened. Entrance zones assigned with the help of the console effect only console controlled output operating algorithm and does not effect on outputs controlled by intrusion and fire alarm panelss.

1.3 Delivery set

1.3.1 List of delivery set components of the console “S20000M” is shown in table 8.

Table 8 ***Delivery set of console ‘S2000M’***

Name	Quantity	Note
Check and control fire-alarm ‘S2000M’ console	1	
Check and control fire-alarm ‘S2000M’ console. Maintenance guide.	1	
Screw with 1-3x20.016	3	
Dowel 8x35	3	
Printer cable	1	Supplied for additional price
Personal computer communication cable	1	Supplied for additional price

1.4 Description the product and capabilities

1.4.1 Console has the plastic case. The printed-circuit board is mounted inside the case. Wires are to be screwed connected to the terminal board. There is the LCD display at the top of case. Under indicator from the right the LED indicators ‘READY’, ‘ALARM’, ‘FIRE’, ‘TROUBLE’ and ‘FAULT’ are located. Indicator ‘READY’ has green lighting with the others ones have red lighting. Below indicators there is a keyboard with 20 keys. Keyboard has supplied with the cover for dust and casual pressure protection. The layout, overall and mounting dimensions are presented in appendix A.

SEC.RU | Короткий путь к информации
Скачано с sec.ru

2 Maintenance

2.1 Preparation the product

2.1.1 General information

Console uses RS-485 interface to connect fire-alarm system devices, RS-232 interface to connect printer with consequence interface or personal computer, and contacts to connect reserved DC power supply. For additional price printer and computer connection cables are supplied. Typical connection circuit is shown on the Figure 1.

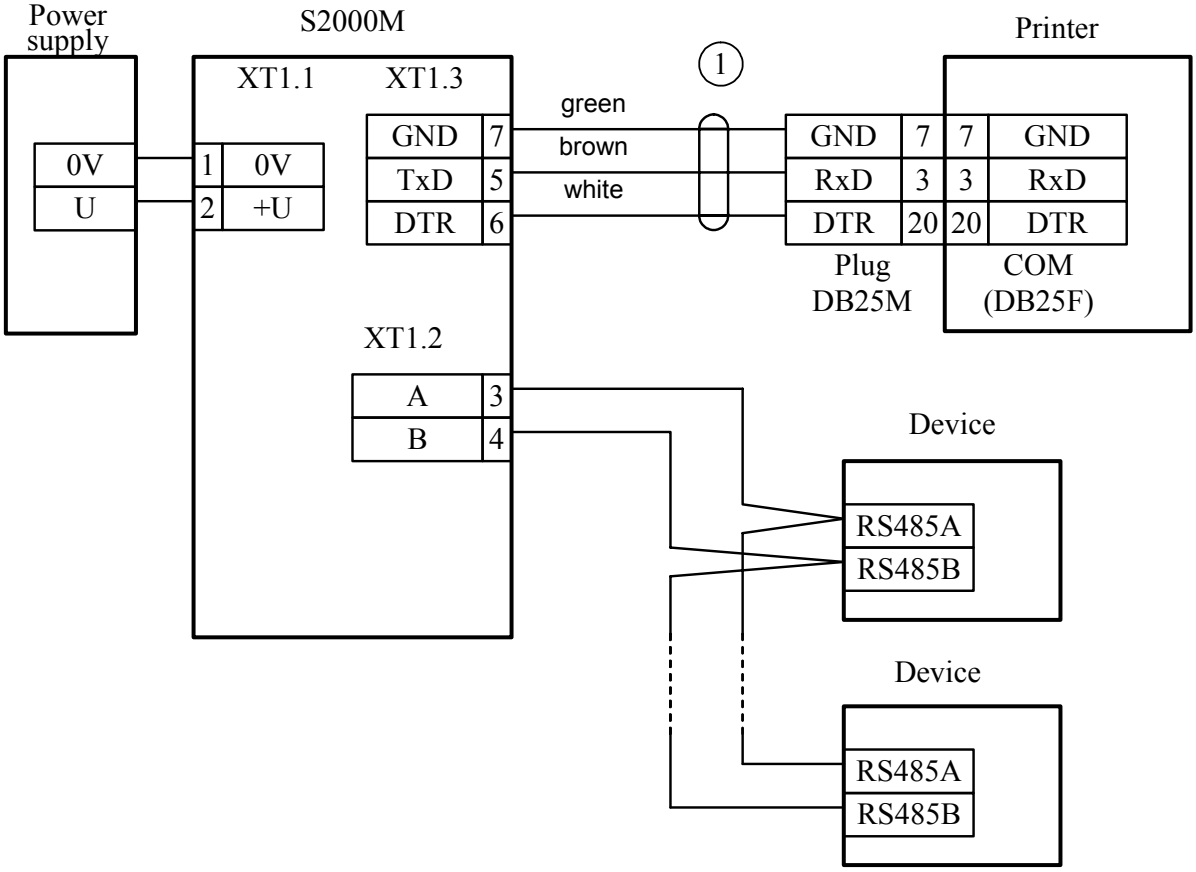

C2000M – fire check and control console;
Device – one of the "Signal-20", " Signal-20P", "S2000-4", "S2000-KDL", "S2000-SP1", "S2000-K", "S2000-KS", "S2000-BI", "S2000-IT" or "S2000-2";
Printer – printing device with serial interface RS-232 (e.g, Epson LX-300 or LX-300+);
1 – printer connection cable;
Power supply – DC power supply from 10,2 to 28,4 V current supply no more than 150 мA.

Figure 1 Typical maintenance connection 'S2000M' console circuit

Attention! On the console board there is 5-pin auxiliary slot. It is prohibited to set pin tampers or shortly connect the pins if console power is on.

At mounting fire-alarm signal system console and other devices has to be customized. First of all, each device connected to console through 'RS-485' interface has to have unique network address. Panel cannot poll devices if they have identical addresses. Address values from 1 to 127 are valid. See item 2.1.2 for details. More over, each device has set of configuration parameters, which determine its work algorithm. Changing values of the parameters, devices work algorithms can be changed according system requirements (item 2.1.3). Addresses for

SEC.RU | Короткий путь к информации Скачано с sec.ru

devices, which connected to 2-Wire addressable line of ‘S2000-KDL’ devices, must be also configured (item 2.1.4).

To customize the control by relay units ‘S2000-SP1’, indicator units ‘S2000-BI’, keyboards ‘S2000-K’ and ‘S2000-KS’, informators ‘S2000-IT’ console have to be configured. Also at configuration user passwords and their rights, partition and user text descriptions have to be set. See details in the item.

If in the system ‘S2000-4’, ‘S2000-2’ or ‘S2000-KDL’ devices are used, which contain Touch Memory keys and Proximity cards for local control by loops or by access, it is recommended to program these keys in console and to set test description for them. Otherwise, device event do not contain user identificator.

2.1.2 Connection console and devices to RS-485 interface instructions

To connect devices and console to the RS-485 interface their contacts ‘A’ and ‘B’ need to be connected to the A and B interface lines. It is supposed that RS-485 interface use connection of type ‘bus’ between devices, that is all devices connected through interface by one pair of wires (A and B lines), matched at two sides by matching resistors (Figure 2). Resistor rating value is 620 Ohm. They are set at first and at last devices in the line. In ‘Signal-20’, ‘Signal-20’ series 02, ‘Signal-20P’, ‘S2000-4’, ‘S2000-SP1’ and ‘S2000-KDL’ devices matching resistance is set on the board and can be connected in the line by setting jumper. In ‘S2000’, ‘S2000-K’ and ‘S2000-KS’ devices matching resistance – jumper - is absent. So it is recommended for the first and the last device in the line to set jumper (for ‘Signal-20’, ‘ Signal –20P’, ‘S2000-4’, ‘S2000-SP1’) or resistor 620 Ohm between contacts ‘A’ and ‘B’ (for ‘S2000’, ‘S2000-K’ and ‘S2000-KS’). At all other devices jumpers should be removed.

‘S2000M’ console can be set at any place in the RS-485 line. If it is first or last device in the line, then between contacts ‘A’ and ‘B’ matching resistor 620 Ohm need to be set. Branches in the line are not undesirable, because they increase reflection signal in the line. But they can be if length of branch is short enough. Matching resistor is not setup at separate branches.

Resistance of each interface line (A or B) from console to the most remote device has to be no more 200 Ohm. In the presence of strong external electromagnetic field it is recommended to use winding pair. Devices and console ‘0 V’ circuits have to be connected. It is no need to connect ‘0 V’ circuits, if console and devices connected to the one power supply.

To extend connection line length RS-485 interface repeaters with automatic area transmission switching can be used (Figure 3). For example, ‘S2000-PI’ interface converter - repeater with galvanic isolator allow to extend line length up to 2000 m, implement galvanic isolation between line segments and automatically off short circuit segments of RS-485 interface. ‘0 V’ circuits of isolate segments do not connected. Also repeaters can be used to build ‘star’ configuration (Figure 4).

Attention! Each console connected through RS-485 interface device must have unique network address. Network address saved in the nonvolatile device memory, it is default value is - 127. For each connected device unique address must be set. To do this follow sequence of actions shown below:

a) connect one device to the console;

b) when panel detected device, set personal network address by address set command (item 2.2.4.2). Address values from 1 to 127 are valid;

SEC.RU | Короткий путь к информации Скачано с sec.ru

c) connect next device and by identical way set another network address, different from first one;

d) by this way connect the rest devices, setting unique addresses.

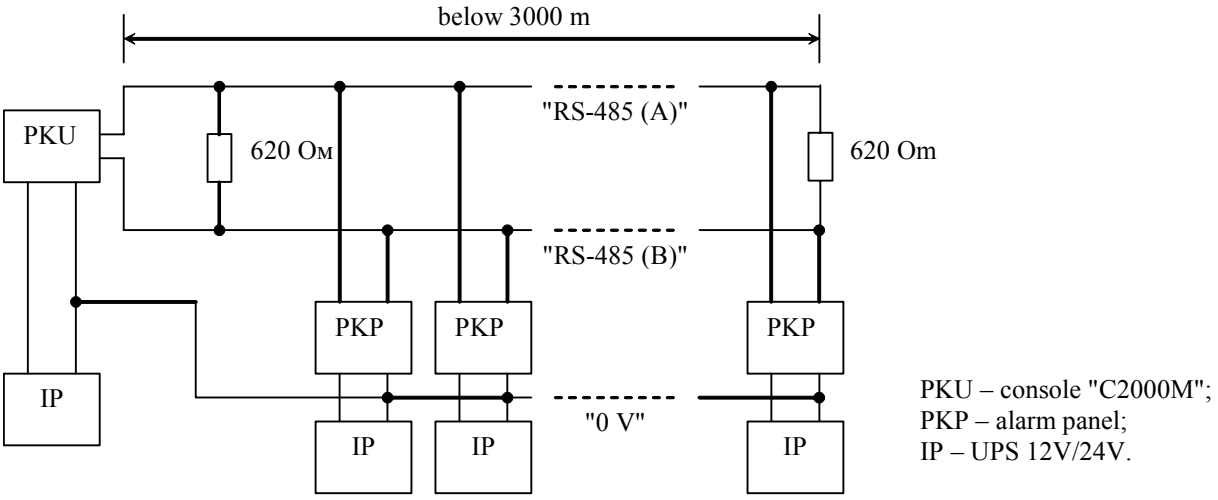

Figure 2 Device RS-485 interface connection circuit.

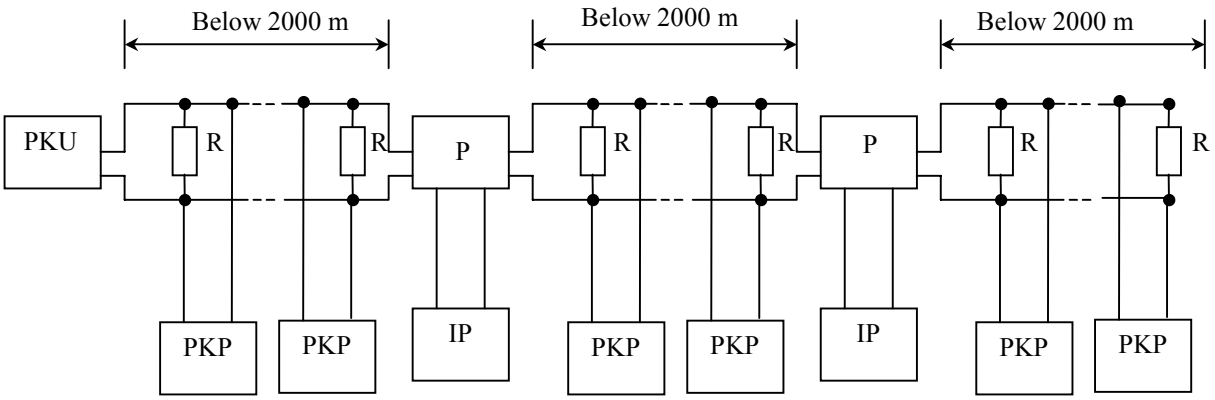

PKU – console "S2000M";
PKP – alarm panel;
P – interface repeater;
IP – power supplier;
R – matching resistance 620 Ohm.

Figure 3 Extend line length with the help of RS-485 interface repeaters

SEC.RU | Короткий путь к информации Скачано с sec.ru

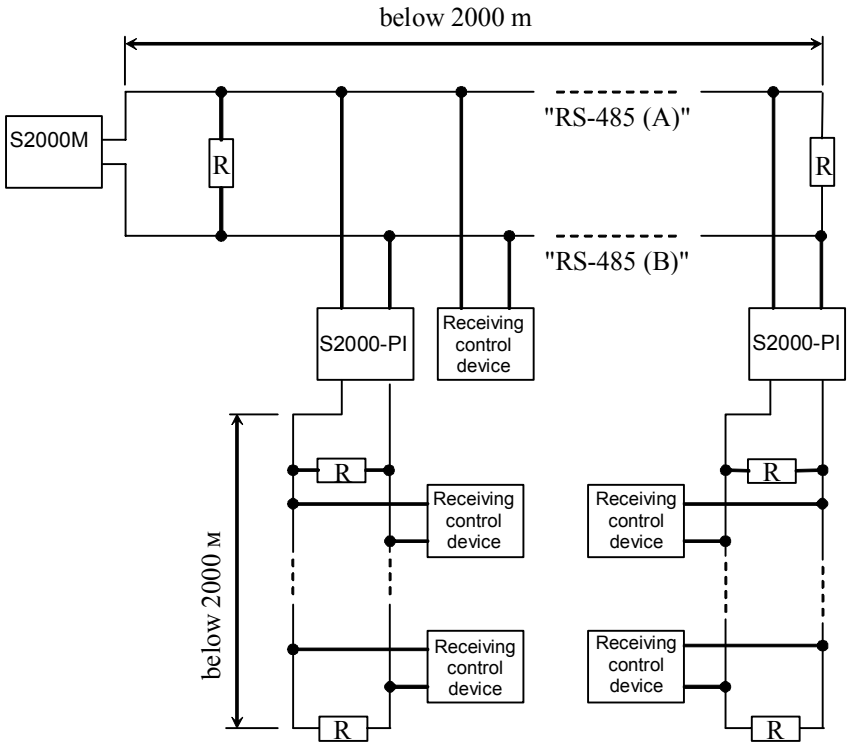

Figure 4 Built 'star' configuration with the help of interface repeaters

Sometimes there is need to connect console to devices through radio channel, radiorelay channel, fiber or other connection lines. To interface RS-485 channel with connection channel equipment with RS-232 input or 'RS-485' input and having next data transmission parameters and: speed transmission 9600 bit/s, word length 8 bit, without check even parity, 1 stop bit. If equipment with RS-232 output RS-485 interface signals have to be converted in RS-232 interface signals by RS-232 – RS-485 converter (for example, 'S2000-PI'). Similarly at the other side of the connection line RS-232 signals need to be converted in the RS-485 interface signals. As a rule, at data receiving-transmission equipment has own noises. More over, it may have significant receive-transmit switching time. If the timeouts are above acceptable values, console will not detect devices or connection will be unstable. For example, if transmission equipment imports delay 3 ms, then 'S2000M' console receive reply from device more then 6 ms after request. Because console waits reply from device no more 5 ms, device will not be detected. To solve these problems few connection parameters made customizable. There are standby time at duty cycle poll, device search, at command, and set of customizable delays before transmission. If equipment distortion is only data transmission delay, it is just enough to increase polling latency time. In more complicated cases, it is need to increase device delay before reply and console pauses, if equipment switches from receive to transmission too long. It is need to keep in mind that if pauses values increase then device polling time decrease. Console connection parameters are customized by '**pprog.exe**' program, device connection parameters – by '**uprog.exe**' program. Programs '**pprog.exe**' and '**uprog.exe**' are free and can be downloaded at site www.bolid.ru.

2.1.3 Setting device configuration parameters

One can configure such device parameters as alarm loop type, transmission delays from one operating mode to another (arm delay or fire delay), alarm loop connection with output keys, work algorithm (control program) of output keys and others. Configuration parameter values saved in the device nonvolatile memory. Program and control device configuration can be done

SEC.RU | Короткий путь к информации Скачано с sec.ru

with the help of personal computer and utility ‘**uprog.exe**’. To connect devices to personal computer RS-232 – RS-485 interface converter needed (‘PI’, ‘PI-GR’ or ‘S2000-PI’). ‘S2000M’ console can be used as interface converter, transmitted in program mode. Connection circuit of devices in programming at personal computer with ‘S2000M’ using shown on Figure 5.

2.1.4 Address setting of addressable expanders

If ‘S2000-KDL’ controller used in the system with address devices connected to the 2-wire addressable communication line each device unique address (address set) has to be set Expanders ‘S2000-AR1’ and ‘S2000-AR2’ addresses can be set with the help of console or ‘**uprog.exe**’ program. It is strongly recommended to program extender’s addresses before mounting, because when address is programmed controlled extender circuits is used. Description of the extender address changing with the help of console is shown in the item 2.2.4.3.

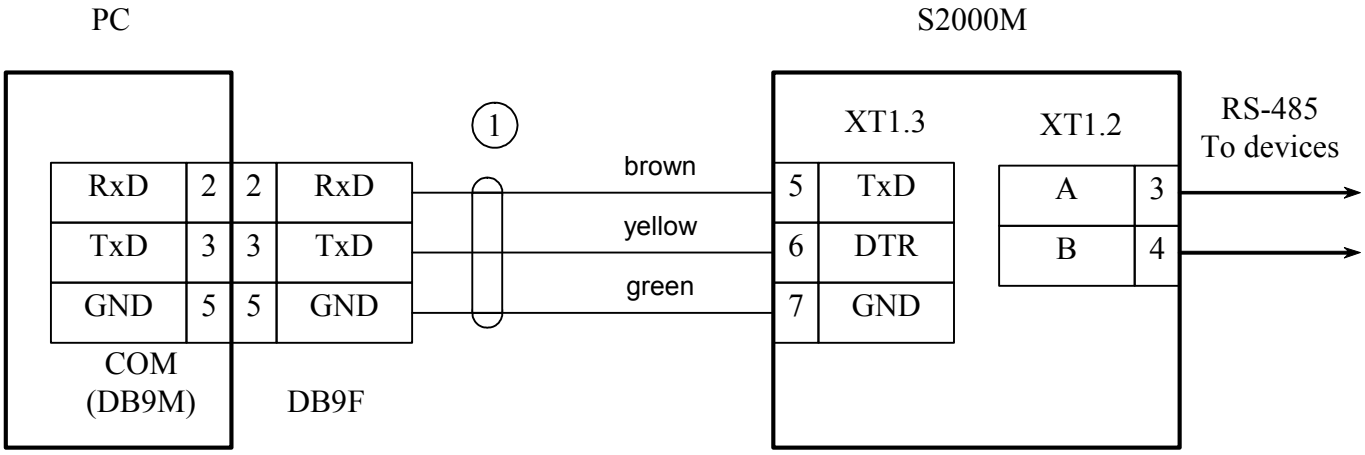

PC – personal computer,
S2000M – check and control console "S2000M",
1 – connection cable "S2000" to the personal computer

Figure 5 ‘S2000’ console connection circuit. It is configured by personal computer through RS-232 interface. Also it is shown using it as RS-232 – RS-485 interface converter.

2.1.5 Printer connection to console or ‘ARM S2000’

If console is used with printer, the last one has to be set for next parameters according instruction:

Description	Setting name in LX-300+	Value (in LX-300+)
Interface type	I/F mode	Serial or Auto
Transmission type	Baud rate	1200 BPS
Number bit	—	—
Parity check	Parity	None
Code page	Character table	PC 866
Auto line feed	Auto line feed	Off

On the site *www.bolid.ru* one can download instruction for configuring ‘S2000M’ consoles for working with printer Epson LX300+. Epson LX300 and Epson LX300+ printers have built-in customizing instruction.

Printer is connected to ‘S2000M’ console with the help of Printer cable (see section 1.3). Connection circuit is shown on the Figure 1.

SEC.RU | Короткий путь к информации Скачано с sec.ru

It is possible use personal computer instead printer to log events. To do this, for example, program Hyper Terminal from Windows or Telemax from Norton Commander 5 can be used. COM – port must have next parameters: transmission speed - 1200 bit/s, 8 bit, without parity. Console is connected with help of printer cable and connector to free computer COM - port. If computer has 9 – contact COM – port socket, connector DB-25F – DB-9F required, and for 25 - contact COM – port socket DB-25F – DB-25F connector. At connection to the 9 – pin computer COM – port contact console outputs hav to be connected next way: console output 'TxD' is connected to 2 output COM – port contact , 'DTR' output – to 4 output, output 'GND' – to output 5.

'ARM S2000' program is much more convenient, provided by 'Bolid'. The target of the program is display and preview console events. More over, program has additional features:

- Adding in event log additional information from device and console configuration files: partitions and zones names, user names;
- Highlighting by different color messages of different categories (fires, alarms, faults and so on);
- Displaying states of partitions, zones and devices;
- Event filter allow select events (by time and date, partition number, event categories);
- Connection of several clients operational places working with event log. Connection is made by TCP/IP protocol;
- Printing event log and export in the HTML format.

Program can work periodically to read messages from 'S2000' console. It is possible 'S2000' has buffer for 1023 events.

Connection console to personal computer with 'ARM S2000' is shown on the Figure 5. In program 'ARM S2000' 'S2000 1.2x' source message and address should be set. By perforce console address can be changed (see item 2.2.4.7).

Attention! For work with 'S2000M' consoles of version 1.20 'ARM S2000' program must be version 1.06 or above.

2.1.6 Using the console for "ARM Orion" redundancy

'S2000M' console can be used in systems running 'ARM Orion' for stand-by controlling when PC fails. It is very important with the aim of surviving and robustness for fire alarm and fire auto extinguishing systems.

There are two approaches or modes to build the backup controlling with the help of 'S2000M' console, each heaving some conveniences and disadvantages.

The **first backup mode** named **'S2000 / PC'** is to make 'ARM Orion' monitors all devices and registers states of them with 'S2000M' console being aside. If the computer has failed the console automatically connect the devices and take over the control. When recovering the computer assume the control again.

This backup mode is suitable for using the console coupled with any 'ARM Orion' software version providing the unlimited computer controlling of the system.

The disadvantages of this mode are as follows:

1) The console and 'ARM Orion' are in operation without reference to each other. Messages receiving by the console cannot be obtained by the computer when having restored. On the other hand messages receiving by 'ARM Orion' are not registered by the console.

SEC.RU | Короткий путь к информации Скачано с sec.ru

2) There is some switching delay required when the control is taken over for false switching protection, device detection period and for initiation. The more system is greater the more switching delay is needed.

The switching criterium is the absence of computer polling during given time.

There are two ways of switching the control from PC to the console: 1) by means of self-acting mechanically RS-485 lines switching with the help of "S2000M-SP1" relay units and 2) using the *special* console operating mode, that is *interface converter mode* with automatic transit to redundant mode.

The first way supposes the console to be physically disconnected and is described by the "S2000M-SP1" maintenance guide. One shoulde use the "S2000M-SP1" device version 1.20 or above.

The second way supposes the console to be directly connected to the computer via RS-232 interface, with the the devices being connected to the console through RS-485 interface.

Being operative 'ARM Orion' polls all the system devices but the console execute the RS-232/RS-485 convertor function without galvanic separation. The console doesn't control devices, doesn't show their states and is unresponsive to key pressions. LCD displays the "S2000 / PC" string and the "READY" indicator blinks to show the data transmission.

If the computer doesn't poll the devices during a given time period then the console automatically switches to the active mode. The switching delay is nesessary against false switchings due to the polling intervals.

To configure this switching way set the RS-232 operating mode to the "S2000 / PC" value and give the switching delay as described in section 2.2.4.8. It is recommended to set the switching delay at least 60 seconds.

Two above switching ways are just alike in terms of capabilities. Their benefits in comparison with each other are as follows:

switching by means of 'S2000-SP1'	switching from "S2000 / PC" mode
1) The galvanic isolation is like to be at less cost	1) in case of sophisticated system it is more suitable for usage of several consoles for redundancy
2) Old messages stored by the console in backup mode are available	2) when switching the controlling from the console to the PC the console will not give messages about device disconnections
3) It is possible to connect printer to the console	

The **second reserving mode** called as **'S2000 & PC'** is that the console is to be directly connected to the computer via RS-232 interface, with the the devices being connected to the console through RS-485 interface. The console monitors all the devices and gets their states, with the computer polling the concole (or consoles) and getting the device operative information. Both the console and the computer can control the relay outputs and indication units. If the computer fails the console will retain to execute the controlling functions. This reserving mode has the following advantages:

1) The devices are available for controlling by the console when the PC operates normally. If the PC supplied with 'ARM Orion' software failes the event messages are storied in the console buffer and can be readed after the computer restoring.
2) As a result of absence of switching between the console and PC there is no switching delay.
3) Delegating the console some controlling functions unloads the PC.

SEC.RU | Короткий путь к информации Скачано с sec.ru

To realize the second reservation mode it is necessary to assign the console with the address and set the RS-232 operating mode to the value “S2000 & PC”. Refer to the section 2.2.4.8 for more details.

The following Table 9 summarizes the essentials of all available backup techniques.

Table 9 ***Available backup techniques***

№	Technique	Technique description	Configuration method
1	Disconnected console and relay switching	The monitoring and controlling are carried out from the computer. The console is active but disconnected from the system. When the PC has stopping poll the devices for given time the console has automatically connected to the devices with the help of “S2000M-SP1” relay unit.	In accordance with the “S2000M-SP1” relay unit maintenance guide
2	Passive console and automatic switching	The monitoring and controlling are carried out from the computer. The console is directly connected to the computer via RS-232 interface, with the the devices being connected to the console through RS-485 interface. The console doesn’t control devices, doesn’t show their states and is unresponsive to key pressions. When the PC has stopping poll the devices for given time the console has automatically switches to the active mode.	In accordance with the 2.2.4.8 section ot this maintenance guide set RS-232 operating mode to the “S2000 / PC” value and give the switching delay
3	Active console	The console is directly connected to the computer via RS-232 interface, with the the devices being connected to the console through RS-485 interface. The console monitors all the devices and gets their states, with the computer polling the concole (or consoles) and getting the device operative information. Both the console and the computer can control the relay outputs and indication units. If the computer fails the console will retain to execute the controlling functions.	In accordance with the 2.2.4.8 section ot this maintenance guide set RS-232 operating mode to the “S2000 & PC” value and give the own console address

Note that the techniques 1 and 2 are obsolete but technique 3 is recommended.

Figure 5, Figure 6 and Figure 7 demonstrates the connection diagrams.

Figure 5 shows the simplest way to connect the console to the computer. The defect of this way is the galvanic coupling between the PC and system devices through the RS-232 interface. This galvanic coupling result to the devices or RS-485 interface and the PC interfere to each other.

To isolate the PC from intrusion and fire alarm panelss the RS-485 interface repeaters with galvanic isolation, e.g, “S2000-PI”, can be used. The connecting diagram providing galvanic isolation RS-485 line by ‘S2000-PI’ device is shown on the Figure 6. Note that to provide isolation the console and interface repeater should be powered by separate source without ‘0 V’ circuit of this source coupling with the ‘0 V’ devices circuit.

SEC.RU | Короткий путь к информации Скачано с sec.ru

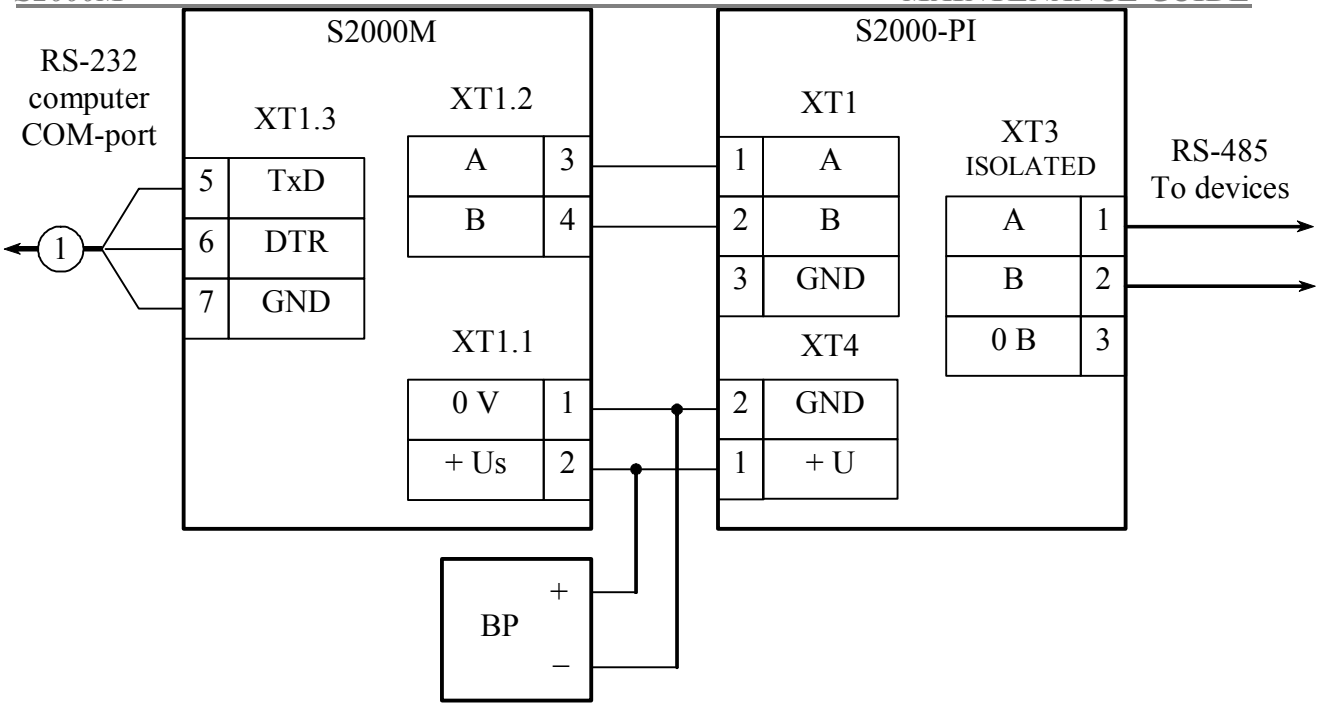

S2000M –‘S2000M’ alarm panel;
S2000-PI – interface converter repeater "S2000-PI";
BP – power supply.

Figure 6 ‘S2000M’ PC with AUP ‘Orion’ with galvanic isolation of interface RS-485 connection diagram

The ‘S2000M’ database storage is far less then ‘ARM Orion’ database. It prevents the creation of backuping if system has more than 2048 alarm loops and 511 partitions. It is possible to reserve the PC by several ‘S2000M’ consoles. One can connect only single console to the PC RS-232 interface therefore it is necessary to convert RS-232 interface to the RS-485 interface by means of ‘S2000-PI’ which several consoles are connected to. The consoles are connected to the RS-485 interface line by their RS-232 outputs via ‘S2000-PI’ convertors. The devices are connected to the RS-485 outputs of consoles.

Figure 7 displayes the way of connecting several ‘S2000M’ consoles to the computer. In addition to the capability of several consoles the ‘S2000-PI’ convertors provides the galvanic isolation between the PC and the console. When ‘ARM Orion’ reserving by several consoles the system device number should not exceed 127 and all system devices should have unique addresses. If the computer failes each console will control own connected devices, i.e, the system will disintegrate to several unrelated subsystems.

For regardful reserving the consol configuration should correspond to 'ARM Orion' or 'ARM Orion Pro' one given by “Database Administrator” program. The structure and the names of the zones and partitions should be the same in both configurations. The user names given for the same password are to be identical.

It is recommended to to write the console configuration from the computer by means of “Database Administrator” program.

SEC.RU | Короткий путь к информации Скачано с sec.ru

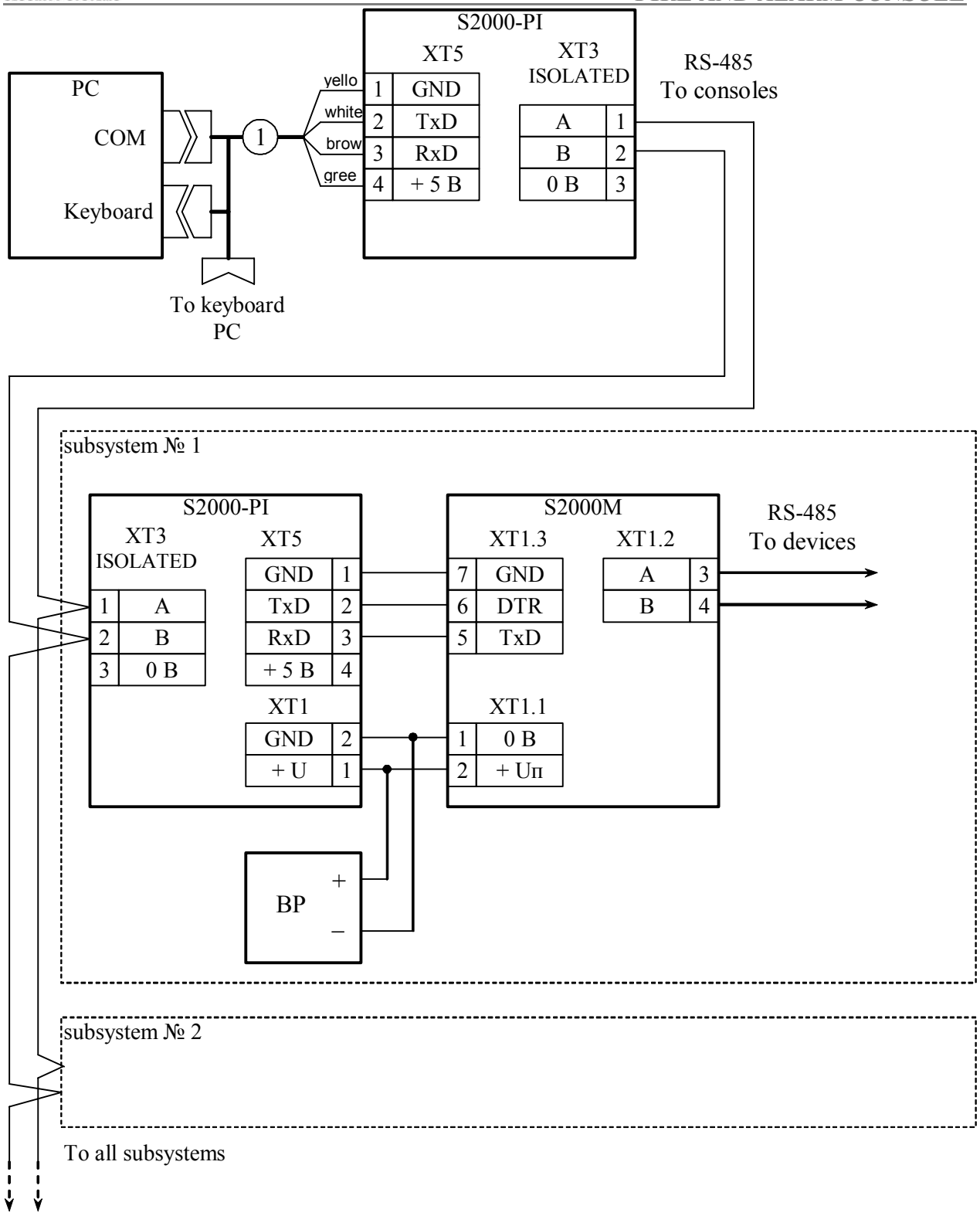

S2000M –‘S2000M’ alarm panel;
S2000-PI – interface converter repeater "S2000-PI";
BP – power supply;
1 – connection cable "S2000-PI" and PC.

Figure 7 Connection of several ‘S2000M’ to the PC with ‘ARM Orion’ with galvanic isolation of interface RS-485 diagram

SEC.RU | Короткий путь к информации
Скачано с sec.ru

2.1.7 Console configuring

2.1.7.1 General information

If it is required to use ‘S2000-SP1’, ‘S2000-BI’, ‘S2000-K’, ‘S2000-KS’, ‘S2000-IT’ devices in the system, then console must have control rules of the devices. These rules are setup when console is configuring.

Creating the console configuration can be done only with the help of personal computer and program ‘**pprog.exe**’ version 2**.04** and above. The program is free. It is available on the site www.bolid.ru

Console configuration steps are:

1) Run program ‘**pprog.exe**’. Read configuration from console or file, or create new one;

2) Correct it if necessary and save in file;

3) Write ready configuration in file.

To create new configuration by means of ‘pprog.exe’ select command ‘Create’ in menu ‘File’, or press button ‘Create new configuration’. Select console version, and press ‘OK’. The default configuration will be created and it can be edited if necessary.

To read present configuration select command ‘Open’ in menu ‘File’, or press button ‘Open configuration file’. In window ‘Open file’ select file type, select file and press button ‘OK’. There are two available types of configuration files: text (with TXT extension) or encrypted (with GPC extension). To read encrypted configuration file it is necessary to enter engineer password.

To write configuration in the file select command ‘Save’ or ‘Save as’ in ‘File’ menu, or press button ‘Save configuration file’. Configuration can be saved in text or encrypted file.

Edited configuration can be saved in a file, loaded from a file, written to the console nonvolatile memory, or read from the console memory. To write or read the configuration ‘S2000M’ console has to be connected to personal computer. The console can be connected both via RS-232 or RS-485 interfaces. In the first case console is connected to computer as shown on the Figure 5, and the second case is shown on the Figure 8.

Set console programming mode:

	press ‘PRG’ key;
ENTER CODE:	enter engineer password (default value - <123456>) and press ‘ENT’ key;
⬍5 SETTINGS	select menu item ‘SETTINGS’ by keys ‘▲‘ and ‘▼‘ and ‘ENT’, or press key ‘5’;
⬍ REMOTE PROGRAM	select menu item ‘REMOTE PROGRAM’ by keys ‘▲‘ and ‘▼‘ and ‘ENT’, or press key ‘6’;
PROGRAMMING MODE	the LCD will display ‘PROGRAMMING MODE’ indicating the console status.

Console in programming mode allow to write and to read the configuration by means of program ‘**pprog.exe**’. When in programming mode the console should have a unique address in ‘RS-485’ interface address range. Its default value equal 127 and can be changed (see. item 0). Refer to the ‘**pprog.exe**’ user’s manual for procedures for console configuring. To exit from programming mode press console key ‘CLR’. The console will return to operating mode and

SEC.RU | Короткий путь к информации Скачано с sec.ru

request the states of all connected devices loops and so on. It can take few dozen seconds (typically) or even few minutes (maximal value). After that procedures console is ready.

Before reading and writing of ‘S2000’ console configuration by program ‘pprog.exe’, the communication between console and program has to be set. Select ‘Devices’ tab, shoose the console communicated COM-port number and press key ‘Start searching’. Program searchs the connected devices, showing addresses and types of founded devices in the lower window. If the console will be founded the reading and writing of the console configuration will be able. Main menu of ‘S2000M’ include functions ‘Write configuration’ and ‘Read configuration’ for reading and writing current configuration to the console memory. Read operation takes about 4 minutes, Write operation - about 4 min 20 sec.

Attention! During writing of the configuration it is prohibited cut off the power of the console or exit from programming mode. If it is happened, writing operation has to be repeated.

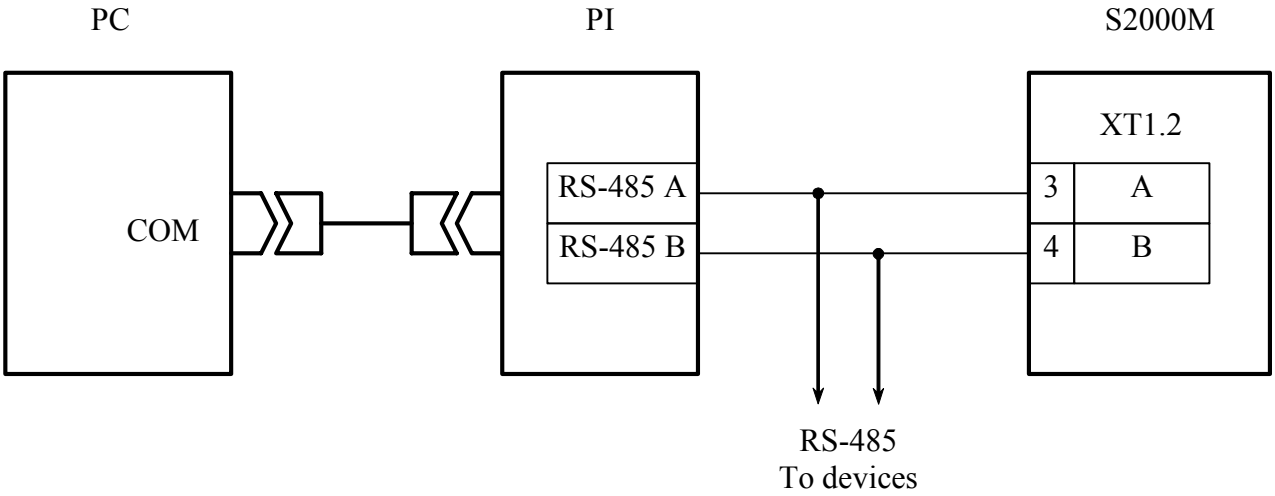

PC - computer,
PI – interface converter RS-232 – RS-485
(for example, ‘PI’, ‘PI-GR’, ‘S2000-PI’),
S2000M - ‘S2000M’ alarm console

Figure 8 ‘S2000M’ connection for configuration by personal computer through RS-485 interface

Configuration creating steps:

1) Add required devices into console data base and create the partition;
2) Define the authority levels for partition controlling, assign reguired PIN codes and registered corresponding Touch Memory keys or Proximity cards;
3) Set the relay output controlling;
4) Set the event reporting to ‘S2000-K’ keyboards and ‘S2000-IT’ informators;
5) Set the entry zones;
6) Create user messages, if it's needed.

These steps are described in sections 2.1.7.3 - 2.1.7.7.

2.1.7.2 Adding devices into console database and partition creation

Device loops can be included in partitions, and their outputs can be automatically controlled by ‘S2000M’ console, if these devices are presented in console database. To add the device specify it address and type.

SEC.RU | Короткий путь к информации
Скачано с sec.ru

Select ‘Devices’ tab of program ‘pprog.exe’. It can be done by two ways: manually and from list of polling devices. To obtain the devices list press ‘Start searching’. Program detects connected devices. Devices are added to the console database by dragging from window ‘Search’ to window ‘Devices’. To add device manually press ‘Add device’ button in the top right corner of the ‘Devices’ window. In ‘Inspector’ window click the address line and type the required address (the digit from 1 to 127). Click the type line and select the required value from the available list. If it is necessary add the description that will be shown only from the configuration program. New device will be added to the database.

To create partition it is necessary to add new partition, assign it number (from 1 to 4 digits) and to include required zones. The total number of partitions cannot be more then 511. Optionally one can assign any text descriptor (no more 16 symbols) to zones and to partition.

To add new partition select the tab ‘Partitions’. This tab has two windows. Top window ‘Partition zones’ contains a partition’s tree with zones, the bottom window ‘Device zones’ contains the device tree with zones. Press button ‘Add partition’ in the upper right corner of the ‘Partition zones’ window. In ‘Inspector’ window click the line ‘Number’ and type the unique number (from 1 to 4 digits). If it is necessary assign the text descriptor to the partition in ‘Description’ line (up to 16 symbols). Parameter value input is finished by pressing key ‘Enter’ on computer keyboard. Adding zones to partition is made by drug-and-drop of zones from bottom device tree in correspondent brunch of upper partition tree. Program allows dragging both one zone and group of zones. For group selection use left mouse button with keyboard buttons ‘Shift’ or ‘Ctrl’. Key ‘Shift’ is used for selecting zone range but ‘Ctrl’ is used for selective marking. If it reguires to drag all device zones into the partition one can drag the device itself from device tree.

Zones can be assigned with the text description. Select the reguired zone in ‘Device zones’ window and click the ‘Description’ line in ‘Inspector’ window. Enter the text string up to 16 symbols.

Partitions can be integrated into groups. There can be created up to 128 partition groups. To create partition group it should add new group, assign it with a group number (from 1 to 4 digits) and include required partitions. Partition groups can be assigned with the text description (up to 16 symbols). One group can contain up to 511 of partitions and a partition can member into several groups.

Note: Group controlling takes more time then partition one especially when a partition is included into few groups. So it is not recommended if it is not really needed.

To add new partition group select the ‘Partition groups’ tab. This tab has two windows. Top window ‘Partition groups’ contains a partition group’s tree with partitions, the bottom window ‘Partitions’ contains the partition list. Press button ‘Add group’ in the upper right corner of the ‘Partition groups’ window. In ‘Inspector’ window click the line ‘Number’ and type the unique number (from 1 to 4 digits). If it is necessary assign the text descriptor to the group in ‘Description’ line (up to 16 symbols). Parameter value input is finished by pressing key ‘Enter’ on computer keyboard. Adding partitions to the group is made by drug-and-drop of partitions from bottom partition list in correspondent brunch of upper group tree.

2.1.7.3 Setting partition control rights and password programming

Access to partition control functions is granted to users at password entering at ‘S2000M’ console, ‘S2000-K’ keyboards or ‘S2000-KS’, or at using Touch Memory key or Proximity card with ‘S2000-4’ or ‘S2000-2’, ‘Signal-20P SMD’ version 2.01 and above, ‘S2000-KDL’ version 1.15 and above. User gets access to partition control functions if he has corresponded control rights for these partitions and control is permitted for controlled device, if he has rights. User’s

SEC.RU | Короткий путь к информации Скачано с sec.ru

rights is determined by *access level* of its password. Access level determines permitted partition list and control rights for each partition. Device's rights are determined by permitted control partition list of this device. All partition control right information (access levels, password and device rights) are programming in the 'S2000M' console. Access levels and device rights can be given by program '**pprog.exe**' only. Passwords can be set by both program '**pprog.exe**', and by console.

In console up to 252 access levels with partition control rights can be set. Access levels should be given before passwords programming. At adding for each access level number from 1 to 252, list of permitted partition for control, for each partition in the list control rights (permit or not arm, disarm) have to be set. If for access level arm and disarm are not permitted, then password owner can only view the states of accessible partitions. It has to take into account the restriction that just 8 access levels can have control rights for the same partition.

To create access level choose 'Authority levels' tab of program '**pprog.exe**'. This tab consists of two windows. Top window 'Authority levels' contains tree of added to the console configuration access levels, where each level has partition list, that he gives right to control. Bottom window 'Partitions' contain list of all partitions, added in configuration. To create authority level press button 'Add athority level'. In the inspector window in line 'Number' select authority level number (Number has to be in the range from 1 to 252), and in line 'Description' type text name (this parameter is additional and not saved in console). Further in created level it is need to add partitions for control. Partition is added by 'dragging' from bottom window 'Partitions' in selected level of top window 'Authority levels'. The partition will be added in the authority level partition list. Selected partition, in the inspector's window control privilegies of the partition can be set, enabling or denying arm or disarm.

Adding and editing of passwords are made on the 'Passwords' tab of program '**pprog.exe**'. At password setting user number, password type, code value and the password access level have to be set. Also user text identificator can be given. Also user text identificator (name) can be set. All these parameter are set in the inspector window controls. For new password press button 'Add password' and in the inspector window in line 'Number' set identificator number, in line 'Code' set identificator value, in line 'User' set user text description, in line 'Authority levels' set password authority level. To edit parameter select line by double mouse click and input new value.

User number is number from 1 to 2047, which with text description identify user in the system. Password with number one 1 – is main password always (set up password). It has type 'main password' (PIN – code from 1 to 8 digits) and used for programming only. User passwords can have numbers from 2 up to 2047. It is recommended to type text description also. User name – any text string with length up to 16 symbols.

Console support two user identification ways: PIN - code (digit password) at console or 'S2000-K' or 'S2000-KS' keyboards and Touch Memory key or Proximity - cards at 'S2000-4' and 'S2000-2'. Respectively, there are differ two type of identificators: PIN - code (password of 'S2000-K', 'S2000-KS' keyboards and 'S2000M' console) and Touch Memory key or Proximity - cards (password of 'S2000-4' and 'S2000-4' devices). Identificator type determined by program automatically. Entered at 'S2000-K' keyboard password has to contain 4 digits. If password entered at 'S2000' console, then it can contain from 1 to 8 digits. Maximum length of user password for 'S2000' console determine by value of the 'CODE LENGTH' parameter.

SEC.RU | Короткий путь к информации Скачано с sec.ru

Console finished password enter if number typed symbols equal to value of the parameter. Parameter ‘CODE LENGTH’ can be in range from 1 to 8 symbols (see item 2.2.4.4).

Identity code is input from the computer keypad or ‘S2000-K’, ‘S2000-KS’, ‘S2000-4’,‘S2000-2’,‘Signal-20P SMD’, or‘S2000-KDL’ devices, provided that they are polled by means of program ‘pprog.exe’. Reading identifiers from the polled device is faster and more useful then manual input. Device must be polled by program ‘pprog.exe’ to input identificator code. If device is not polled, search this device on the tab ‘Devices’ in window ‘Search’. To set code on tab ‘Password’ press button ‘Read code’ and touch Touch Memory key (Proximity-card) to the reader. Key (card) code should be read and showed in ‘Code’ field. ‘S2000-KS’ or ‘S2000-K’ keyboard PIN-code should consisit from 4 digits. Such password can be programmed without ‘pprog.exe’, from console ‘S2000M’. Password programming is described in the item 2.2.4.5.

To set device partition control privilegies select ‘Controlling abilities’ tab of ‘**pprog.exe**’ program and drag reguired partition from ‘Partition’ window to the corresponding device in the ‘Controlling abilities’ window. In such a way each device is to be assigned with the list of partitions available for controlling.

Note that TM or Proximity authority level should have controlling privilegies only for single partition.

2.1.7.4 Setting control by system relay outputs

Console allows organizing up to 255 system outputs (‘open collector’ or relay) which controlled according to the given algorithm on the basis of the partition states. Because ‘S2000’ console control by system outputs let call such control external (to differ from internal control when receive-check device control by their outputs itself). To customize outputs it is necessary select physical relays (device address and relay number in device), which will be used for system control. Determine partitions that controlled by relay’s state (connect relay and partition). Determine relay state dependence from state of connected partitions (select control program). These settings are run by program ‘**pprog.exe**’ when console configured. Control program number is selected according Table 7. If output belongs to device, that support extended output control (for example, S2000-SP1 version 1.20 or S2000-KPB), switching timeout can be set. For outputs with time restricted program time control should be set. Control time and switching delay are given in the range from 0 to 8191,875 seconds with interval 1/8 seconds. If control time equal to 8191,875 seconds, then output will be switching on without time limitation. Setting these parameters run by program ‘**pprog.exe**’ when console configured. If device do not support extended relay control, then their outputs will be switched without delay, and switching time will be equal to the value of configuration parameter ‘Control time’ this relay. ‘Control time’ parameter is set with the help of the console or program ‘**uprog.exe**’. Also, for relay outputs of ‘S2000-SP1’ it is necessarily to set value of ‘Control program of initial state’ parameter. This parameter output state after switching on power of the device. It should be 0 (‘off’) or 1 (‘on’) depending on console output program. If output control by programs, operated on switching on (for example, programs ‘On’, ‘On for a time ‘, ‘Siren’, ‘ASPT’), ‘Control program of initial state’ parameter value have to be 0 (‘off’). Output ‘S2000-4’, ‘Signal-20P’ and ‘Signal-20’ series 02 device initial state determined by parameter ‘Control program’. If output initial state has to be ‘off’, parameter ‘Control program’ has to have value 1, if ‘on’ - value 2. Parameters value ‘Control program of initial state’ and ‘Control program’ can be programmed in device both with the help of console and with the help of program ‘**uprog.exe**’.

SEC.RU | Короткий путь к информации Скачано с sec.ru

Attention! When output external control of ‘S2000-4’, ‘Signal-20P’ and ‘Signal-20’ version 02 devices is used internal control has to be removed, that is outputs have to be not connected to loops. If internal output control is used it is prohibited to use external control, that is outputs have to be not connected to partitions.

Relay output is set on the tab ‘Relay’ of program ‘pprog.exe’. Tab contains two windows: in top window ‘Partitions (relay)’ is displayed partition tree, where for each partition is shown connected relay list. Bottom window ‘Devices (relay)’ contains tree of all system devices with relays. To connect relay output with partition, ‘drag’ the relay from device tree (window ‘Devices (relay)’) in corresponded partition in the tree (window ‘Partitions (relays)’). At that relay will be added to the connected partition list. If output should be controlled by few partitions, connect it with other partitions the same way. It is possible group connection partitions and outputs. Few output can be selected by left mouse button and pressed key ‘Shift’ (for range selection) or ‘Ctrl’ (for selective marking), after that there can de added to the partition. At ‘dragging’ output or few outputs on the tree ‘root’ ‘Partition (relays)’ will be connected to the all partitions in the system. At ‘dragging’ device to the partition all device outputs will be connected to the partition. Also control program, start delay, and control time for the outputs should be set. For that in the window ‘Devices (relays)’ in device tree select relay, in the inspector window are displayed current parameter values, correct them if necessary.

2.1.7.5 Setting message transmission

It is possible transmit events to ‘S2000-K’ keyboard version 1.04 and above. Keyboards allow indicating received events on LCD, signalize by internal sound annunciator at alarm event, have nonvolatile event buffer. Messages can be transmitted to ‘S2000-IT’ phone informators. Messages should not sent to the other devices, because they are not needed them for work and delay system operability! For setting events transition to the devices select the devices, which will receive messages from the console. Messages can be sent independently (translation to the address), or like broadcast message to all devices at once (common translation). For each device message categories and partitions for transmission can be set. It allows permitting some type message transitions (for example, alarms and fires) and prohibit another ones (for example, arm/disarm alarm loop). Message categories are in appendix Г. Partition list allows send only the messages from loop of this list.

Message transition is set on tab ‘Event translation’ program ‘pprog.exe’. Top window ‘Event transition’ contain list of devices for message transition from console. Each device has to have transition permitted partition list. Bottom window can display either system device list (‘Devices’), or partition list ‘Partitions’. Device list is used for adding devices in message device list (in window ‘Event transition’). At adding device tree node ‘To all devices’ console messages will be receive all system devices. Its unload RS-485 line at transmission the same messages to the large number of devices, but exclude individual message send. For each device, added in window ‘Message transition’, in inspector next message categories are pointed, which will be transmitted to it. Also for each device list of permitted message sources (partitions) should be set. For that in bottom window select partition list and ‘drag’ selected devices.

Also, event transmission to printer can be required. This setting is selection of event category that has to be printed. Default value is all events are printed.

Attention!

1) Message transition heavily load RS-485 interface, that decrease system operation speed. To unload interface need to transmit just rare events (such as alarms, fires, faults), use transmission ‘To all devices’, to transmit messages large number of devices.

SEC.RU | Короткий путь к информации Скачано с sec.ru

2) For displaying console transmitted events by ‘S2000-K’ keyboards their configuration parameters ‘Event indication’ and ‘Alarm indication’ have to be customized.

3) ‘S2000-K’ keyboards may not support come of the console messages. Such messages will not be displayed.

4) Transmission speed through phone lines by ‘S2000-IT’ informators is low. That is why to avoid informatory buffer overflow it is recommended to transmit to informatory just the most important and rare messages (alarms, fires). To do this needed event categories has to be permited for transmission, and others have to be forbidden. At informatory buffer overflow it should be cleared (see item 2.2.3.9).

2.1.7.6 Entry zone settings

Console support up to 32 input zones. Each of them is determined by device address, alarm loop number in device and alarm delay. Any alarm ALs connected to the device console can be used as input ALs. Delay can has value from 0 to 254 seconds.

Input zones are setted on tab ‘Entry zones’ ‘**pprog.exe**’ program. In the top window ‘Input zones’ contains alarm loop list, set up as input zone. In botton window ‘Devices (loops)’ there is a list of system devices and its alarm loops. To create input zone ‘drag’ alarm loop from ‘ Devices (loops)’ window in the window ‘Entry zone’ and in the inspector window ‘Alarm delays’ set (in seconds) transition delay alarm loop from ‘intrusion alarm’ mode in the ‘alarm’ mode.

2.1.7.7 Setting user messages

Console allows create user messages, which will be displayed and transmitted instead standard messages. Standard messages rename rules are determined in scripts. Rename script for each standard message gives new name, sound signal, alarm level and category. Script allows rename up to 4 standard messages. Console allows create up to 32 rename scripts. Script can be set for any alarm loop (or few ALs), from console database. If loop rename script is set, then standard messages of the loop will be replaced to user defined messages, if such replace is in script. Message renaming is actual for auxiliary alarm loops, which are usually checking state of an equipment. This possibility permits display, for example, instead of standard messages ‘AUX ZONE ALARM’ and ‘AUX ZONE RESTORE’ other messages, for example, ‘VALVE OPEN’ and ‘VALVE CLOSE’.

Message renaming is defined on the tab ‘Message renaming’ of **‘pprog.exe’** program. Create renaming script, select base messages to be renamed, select sound signals, set alarm levels and select categories of renamed messages. Alarm level determines the priority order for displaying message by the console LCD if few alarm messages are received. Higher alarm level value corresponds to the higher displaying priority of alarm messages. Message category is intended to classify messages with the aim of printing or transmitting to the ‘S2000-K’ keyboards or ‘S2000-IT’ phone communicators. Renaiming script having been created should be associated with corresponding zones.

2.1.7.8 Controlling ‘S2000-BI’ devices settings

‘S2000M’ panel with programmed partitions can be connected to ‘S2000-BI’ indication units. Prior, configuration of indication blocks with the help of ‘S2000M’ console or program ‘**uprog.exe**’ has to be set. Minimal setup is programming partition number for each indicator. At connecting indication units to ‘S2000M’ console LED ‘S2000-BI’ indicators will show states of partitions.

SEC.RU | Короткий путь к информации Скачано с sec.ru

2.1.7.9 Using the console for creating of systems controlling gas, powder or aerosol fire extinguishing installations based on "S2000-ASPT" devices

The console is suitable in gas, powder or aerosol fire extinguishing systems based on "S2000-ASPT" devices especially in case of using several extinguishing areas at once. The console can be used in such systems as follows:

1) To indicate system status by means of "S2000-PT" devices each displaying the current status of 10 areas of extinguishing. For each area several status are displayed, among them fires, faults of fire loops, output circuits, primary and standby power supply, launch blocking, fire extinguishing launching mode (manual or auto), various statuses of launching ("Launching delay", "Launching", "Extinguishing", "Launch fault").

2) To control the status of fire extinguishing area, turn auto/manual launching mode and activate/cancel remote launching from console itself or "S2000-PT" device. These functions require password-based access.

3) The console has a number of relay control programs designed for operating in fire extinguishing systems. Programs "Turn on/off when auto extinguishing is on/off" monitor the launching mode of fire extinguishing units and can be used in particular for controlling "Manual extinguishing" light box. Programs "Turn on during launching delay" and "Turn on during extinguishing" can be used for "Keep out!" и "Get out!" light annunciator controlling. The program "Turn on during launching" can be used for launching of extinguishing installation for several areas. The program "Turn on if launching failed" can be used for standby fire extinguishing installation launching.

It is recommended to use "S2000-ASPT" versions 2.03 and above along with "S2000M" console. The controlling of "S2000–ASPT" devices with versions less than 2.00 is limited by automatic launching control mode and remote launch in local control mode only (out of partitions). Such control doesn't require the configuring of the console and described in section 2.2.3.4.

All zones of "S2000–ASPT" (loops, inner zones and output circuits) should be combined into one partition which represents one area or fire extinguishing. It is necessary to assign some passwords for launch mode control operations and for activating/canceling of the remote launch. For this purpose when creating authority levels ("Authority levels" tab in "pprog.exe") define partitions that is permitted for controlling (that is extinguishing areas) and assign the permitted operations for each partition. The permitted operations can be arming, disarming, and turning automatic equipment on, turning automatic equipment off, remote launching and launch canceling. Arming is needed for resetting of activated "S2000–ASPT" loops. Disarming is meaningless in the context of "S2000–ASPT" using. Other operations are given when needed.

When using "S2000–PT" it is necessary to assign the partition number to each indicator group by means of "uprog.exe". Hence the indicator group is associated with the specific extinguishing area and displays the status of that area. The "FIRE" indicator shows either if some fire loops of "S2000–ASPT" have been activated (being in "FIRE" or "FIRE PREALARM" status), or control zone state (when remote launching command from console has been received), or manual call point activated. "FAULT" indicator signals if there are various troubles in extinguishing area, among them fire loop troubles, output circuit troubles, power outage and disconnection from "S2000–ASPT". "LAUNCH BLOCKED" indicator displays if there is extinguishing launching blocking up (e.g., during launching delay doors to the protected

SEC.RU | Короткий путь к информации Скачано с sec.ru

premises were opening). "AUTOMATIC MODE" indicator demonstrates the current launching mode (is auto launching mode on or not). "EXTINGUISHING" indicator demonstrates status of launching (that is no launching, launching delay, launching or launching failure). "S2000–PT" devices have some buttons for automatic mode controlling (turn on/off auto extinguishing mode) and for remote launching or canceling of auto extinguishing equipment launch. "S2000–PT" device is supplied by input for Touch Memory reader, with Touch Memory keys being used for getting access control to extinguishing area controlling by means of buttons. Touch Memory keys have to be recorded into the console configuration with authority level allowing extinguishing area controlling with the corresponding rights. If the user has no rights the controlling by means of buttons is impossible. "S2000–PT" may be supplied with inner password for extinguishing area controlling, without Touch Memory key identification. It can be used when "S2000–PT" unit is located in secured place. The password (PIN-code) can be recorded to "S2000–PT" device by means of "uprog.exe" program. This password with authority level allowing extinguishing area controlling has to be recorded to "S2000M" console.

The console allows controlling the additional relay outputs, such as annunciators common for several areas or common extinguishing installation. Refer to the 2.1.7.4 section of this manual for procedures for relay output control settings.

2.1.7.10 Using the console with sprinkler or drencher extinguishing units based on devices "POTOK-3N"

The console can be used for displaying the status of sprinkler or drencher fire extinguishing system via the indication units "S2000–BI(01)".

The indication unit "S2000–BI(01)" is designed to display only one area of fire extinguishing. The extinguishing area is represented by the pump station, one or two duty pumps, standby pump and jockey pump. Create the partition for pump station and one partition for each pump when configuring the console.

Include "Potok–3N" device zones controlling the status of pump station into the pump station partition and zones controlling the status of pumps into the pump ones. For the first duty pump use zone № 1 (which controls turning on/off and pump faults), zone № 11 (controls the power outages) and zone №21 (automatic control mode). For the second duty pump use zones with the numbers 2, 12 and 22 respectively, for the standby pump use the numbers 3, 13, 23 and finally for jockey pump use the numbers 4, 14 and 24. Depending on "Potok–3N" device configuration some pumps may be absent and the corresponding zones controlling such pumps might be displayed as "Disconnected alarm loop" status. So don’t create any partition for lacking pumps. The pump station itself is controlled by zones number 30 – 39 with specific zones numbers being depended on "Potok–3N" device configuration. For example, zone № 32 (responsible for manual launching) is used only for systems without pressure. To display the statuses of the pump station and each pump LED four-indicators of "S2000–BI(01)" are assigned. By means of program "uprog.exe" designate the partition number for each indicator group of "S2000–BI(01)" in so manner that the appointment of the partition being corresponded with the caption on the facial label.

2.1.7.11 Using the console with the phone communicator "S2000-IT"

In order to adjust the devices "S2000–IT" for message transmission from alarm system the console should be configured to transfer event messages to these devices. Refer to the 2.1.7.5 section of this manual for descripton of configuring of event reporting. The messages contain the information about loop arming and disarming by specific users provided that the passwords or

SEC.RU | Короткий путь к информации Скачано с sec.ru

codes with corresponding authority levels are assigned in console configuration. Passwords being programmed into the console have some numbers transmitting by the console in arm and disarm messages as user's identificators.

2.1.8 Console mounting

Console can be mounted in any convenient place on the wall or on the other constructions protected from atmospheric condensation, mechanical damages and access of outliers.

2.1.9 Prevention of the accidents at device installation

Console construction satisfies requirements of electro and fire safety. Console has not dangerous voltage circuits. Console construction provides its fire safety in accident regime and in the case violation of maintenance rules. Mounting, setup, technical support have to be done when console power off. Mounting and technical support of the console have to be done by personnel with corresponded qualification access.

2.1.10 Console first starting

Check mounting before console will be turn on.

After console has been turned on LCD should be highlighted and should display message about turning on. At device connection through RS-485 interface console send device detection message. 'Device reset' (is formed by device at power on) and 'Power down' (is formed by some device if power supply below the norm) messages can be shown. Last message device forms if power is turned off, and at next the device connection console read it and display on the LCD. If printer is on, then it should ptint the messages about console and printer turning on, console connected device detection, and other messages.

It is recommended to change setup password, because user can get unauthorized access to program functions. One or several user device control passwords have to be given (see. item 2.2.4.5).

To set the modes it is required to set the parameters 'ALARM SOUND' and 'CODES REQUIRED'. 'ALARM SOUND' parameter needs to be on if inner sound annunciator messages should be alarmed, otherwise it has to be off. The default value is 'on'. 'CODES REQUIRED' parameter determines if control functions are password protected. If the parameter has value 'off', then arming, disarming and other control functions are available without password. The default value is 'on'. These parameter settings are described in the item 2.2.4.4. It is necessary to setup the current date and time. Time and date are required for event logging and for correct working of time zones in access control devices ('S2000-4' and 'S2000-2'). If clock is not accurate, it can be corrected. Description of time and date input, and also clock correction is shown in item 2.2.3.7 and in item 2.2.4.1.

2.2 Using console

Working with console functions is executed with the help of console menu. To select function use keys '▲', '▼' and 'ENT', to cancel key 'CLR' is used.

Numbers can be entered either by typing from keypad or by choosing valid values from the list with the help of '▲' and '▼' keys. For example, entering the device address one can choose the address from the console polling device list.

If operation succeeded console send 'Confirmation' sound signal, otherwise it send sound signal 'Error' with diagnostic LCD message. The following messages are possible: 'COMMAND ERROR: DEVICE OFF LINE' (command was given for disconnected device), '"COMMAND ERROR: UNKNOWN COMMAND' (console do not support this command), etc.

SEC.RU | Короткий путь к информации Скачано с sec.ru

2.2.1 Displaying, viewing and printing device messages

Console receives messages from device. They include event name, data (number and text partition description, device address, number of alarm loops, reader, relay, user identificator), and time.

At LCD message indication in top line message name is displayed, and in bottom its source. Console messages arein the appendix C. As a source, depending on the message type and console configuration, partition name, alarm loop name, user name device address alarm loop number, user number, partition number can be displayed. Additional message information can be seen at pressure corresponded digit. Key '**0**' is used viewing message time and date. Data and time format is next: DD.NM HH:MM:SS, where DD - day, NM – month number, HH - hour, MM - minutes, SS - seconds. If since event rise and until its receiving by console considerable time left (for example, device work independently), the message is shown according to the inner device clock. Indicator of device time is symbol '*' instead '.' as day and month separator. Also device time cannot include data

If main message displays text information about message source, key '**1**' shows data in digit way: partition number, device address and alarm loop number for messages about ALs, device, reader, user numbers for access messages, partition and user numbers for partition arm/disarm messages.

When keys '**2**' pressed, console shows text description of partition and loop. If partition has not text description, when key '**2**' pressed panel show partition number, device address and alarm loop number.

When keys '**3**' pressed, console shows user name. if text user password description is not given, console show its database number when key '**3**' pressed.

Pressing key '**9**', Message number in console buffer can be shown. The last message has number 1, the oldest - 1023.

To print event log console output one message in the line. Next information is printed: дата и event number (format is identical LCD message format), full message name, message source (device address, number of alarm loop, reader or relay), partition number (name) and text description, user text description (name). Data prints like table. After each 50 messages table heading is printing. It has the following view:

```
|-------------------------------------------------------------------------------|
| Date   Time  |     Event      |Device |Part#     Description|      User      |
|-------------------------------------------------------------------------------|
```

The displaying and printering information depends on event type.

Zone messages such as alarms, fires, arming, disarming, faults and so on have the following format, e.g, 'intrusion alarm':

On LCD:

INTRUSION ALARM

Corridor 1-floor , where 'Corridor 1-floor' is partition name.

Console shows message data and time if button '0' pressed:

20.12 17:41:11, where 20.12 is the day and month (20 December), 17:41:11 is the time (17 hours, 41 minutes, 11 seconds).

At button '1' pressure message name with source message is displayed in digit view:

INTRUSION ALARM

100 002/007 , where 100 is the partition number, 002 is the device address and 007 is the number of alarm loop.

When button '2' is pressed the partition and zone descriptions are displayed:

Corridor 1-floor

SEC.RU | Короткий путь к информации Скачано с sec.ru

Door 1 , if partition and zone have text descriptions ‘Corridor 1-floor’ and ‘Door 1’ correspondently;

PART: 100

ZONE: 002/007 , if partition and loop have not text descriptions.

Printer:

```
|-------------------------------------------------------------------------------|
| Date   Time  |     Event      |Device |Part#     Description|      User      |
|-------------------------------------------------------------------------------|
|20.12 17:41:11|INTRUSION ALARM |  2/7  | 100|Corridor 1-floor|                |
```

Loop disarming:

Display:

DISARMED

Door 1 - disarm alarm loop ‘Door 1’.

If key ‘1’ is pressed:

DISARMED

100 002/007 , where 100 – partition number, 002 – device address, 007 – alarm loop.

If key ‘2’ is pressed:

Corridor 1-floor

Door 1 , where ‘Corridor 1-floor’ is partitiojn name, a ‘ Door 1’ is alarm loop name.

Events ‘ARMED PART, ‘DISARMED PART’, ‘PART ARMING’, ‘PART DISARMING’ include partition number and partition user. At printing address device and partition control reader number are printed also. Address in device message equal 0, if partitions controlled at ‘S2000M’ console.

Display:

ARMED PART

Corridor 1-Floor - partition ‘ **Corridor 1-floor**’ armed.

At pressure key ‘3’ user name, who arm partition, can be seen.

At pressure key ‘1’:

ARMED PART

100 U 80 - where 100 is partition number, 80 is user number.

Printer:

```
|20.12 18:26:59|ARMED PART      | 10 S1 | 100|Corridor 1-floor|Administrator   |
```

- partition 100 (‘Corridor 1- floor’) armed 20 December at 18 hours 26 minutes 59 seconds at reader 1 at device with address 10 by user ‘Administrator’.

Receiving device message, console displays it on LCD and save in event buffer. After 20 seconds console returns to the time displaying mode. After printer switching on the all received messages will be read from event buffer and printed. Indicators ‘ALARM’, ‘FIRE’, ‘FAULT’ and ‘TROUBLE’ display current console partition states according to the tables 2 - 5.

When parameter ‘ALARM SOUND’ is on (mode with alarm indication) displaying alarm messages differ from shown above. When console receives one or few alarm messages alarm sound signal is given according to table 6. LCD shows the alarm message. If console gets few equal alarm messages it displays the last one. Single console key pressure cancels alarm sound signal. At the same time printer outputs message ‘ALARM CANCEL’. To cancel displayed on

SEC.RU | Короткий путь к информации Скачано с sec.ru

LCD alarm message press keyboard button ‘CLR’. If all alarm messages are canceled, console will return in time displaying mode.

The events below are shown in alarm level increasing order:

– ‘Arm failed’;
– troubles (‘Loop trbl short’, ‘Loop trbl open’, ‘Power failed’, ‘Battery failed’, ‘Zone config err’, ‘Fire trouble’;
– faults (‘Device restart’, ‘Tamper alarm’, ‘Disconnected’ (RS-485 or 2-wire device);
– ‘Entry alarm’;
– ‘Intrusion alarm’;
– ‘Silent alarm’ (personal attack);
– ‘Fire prealarm’;
– ‘Fire’ (maximum alarm level).

Message ‘Arm failed’ is not alarm message, but it required personal attention. Message ‘Arm failed’ is not accompanied with sound signal.

To view event buffer messages transmit panel in the time indication mode and press button ‘MEM’. By ‘ ▸ ’ (scrolling events in chronological order) and ‘ ◂ ’ (scrolling events in back order) 1023 last messages can be scrolled at LCD. Console makes double sound indicator, if buffer finished. Double sound signal at scrolling events in direct chronological order means, that shown on LCD event was last in the buffer, at scrolling events in back order - first. To view message time and date press and hold button ‘0’. For immediate transition from message displaying mode in time displaying mode use button ‘CLR’.

2.2.2 Partition arming and disarming

Partitions and partition groups are controlled identically (partition group is a partition type), so below we will consider partition control only.

Control functions are authority level password protected (or Touch Memory key or Proximity card protected). If password is correct and its owner has control privilegies, console saves ‘USER'S CODE ENTR’ message in the buffer and gives the user available access according with 2.2.2.1-2.2.2.3 items of this manual. If the password is not recognized, the ‘ILLEGAL CODE’ message is saved in event buffer. If the password entered has no required autrority level ‘ACCESS DENIED’ message is storied. The access will be denied if:

1) User has not control privilegies for any parttion. For example, for empty authority level when partitions are not assigned or assigned partitions cannot be controlled from the device;

2) Presented PIN-code, TM key or Proximity card has no proper authority level;

3) Engineer password is typed.

2.2.2.1 Console controlling of partitions

The main controlling function of console is arming/disarming of partition. Additionally if the system includes "S2000-ASPT" device it would be possible to select automatic or manual launching modes of automatic fire extinguishing systems, launch fire extinguishing system remotely or remotely cancel the launching.

Partition can be armed or disarmed if the password typed has properly authority level. If arming/disarming is not enabled nonetheless it is possible to get the state of partition. Password can be typed in time indication mode or in password typing mode (after pressing ‘ENT’). Parameter ‘CODE LENGTH’ determines the maximum number of digits in the password (see 2.2.4.4) which is by default equal to 4. If there is less numbers in the password it is necessary to press the "ENT" key after typing. If the entered password is incorrect the console will sound in

SEC.RU | Короткий путь к информации Скачано с sec.ru

‘ERROR’ mode, display the message ‘ILLEGAL CODE’ and after that will indicate the time. To avoid the password selection after four running wrong typing the console blocks up next password entering for 30 sec (for 1 min after 5 typing, for 2 min after 6 typing and etc. After entering the legal password the blocking will be off.

Getting the partition state

ENTER CODE:
⬍ 1200: DISARMED Second Flore

Enter the password with partition controlling rights.

If it is correct the console will display the state of first available partition. The example demonstrates that the partition named "Second Flore" has the state "DISARMED". " ▸ " and " ◂ " keys are suitable for getting other partition states. Also it is possible to enter the partition number and press "ENT" key.

The partition has several states due to the states of all zones (alarm loops, addressable detectors and load circuits) and all devices included. Initially the console displays the state with the highest priority. The list of priorities in decreasing order can be viewed below in appendix B. The listed states can concern to zones (e.g., "Intrusion alarm"), devices (e.g., "2-wire line short circuit") or zones and devices both (e.g., "Power failed").

The console in current version monitors the tampering of the device case and so the tampering of case makes influence on all states of the partitions to which device’s zones belong. The tampering of detector case on the contrary is not monitored and doesn’t affect on the states of partition.

To get all the states of partition press "TRBL". The console will display the partition descriptor (name or the number if no named) in the first line and its state of highest priority. Press " ▸ " for scrolling and showing the list of states in decreasing priority order. Press " ◂ " to return the previous entry.

Use " ▸ " and " ◂ " and press "ENT" to display all zones with such state, for example with the state "Intrusion alarm". Use " ▸ " and " ◂ " keys to scroll zone descriptors. The state of zone is displayed in the upper line but the descriptor of zone is displayed in the lower one (name or device address with alarm loop number, or addressable detector number, or load circuit number).

Partition arming/disarming

Enter the password with partition controlling rights.

Choose the required partition by means of " ▸ " or " ◂ " keys or having entered its number.

Press "ARM" for arming or "DISARM" for disarming. Or press "ENT", enter to menu, select the necessary command and press "ENT".

If partition has armed the console makes sound signal ‘Success’ and displays new partition state ‘⬍1200: ARMED’. Otherwise console makes sound signal ‘Error’ and displays error message: UNKNOWN PART’, ‘ACCESS DENIED’, ‘OPERATION NOT COMPLETED’, or another message diverse from "ARMED".

Message ‘UNKNOWN PART’ means that partition not exists. Message ‘ACCESS DENIED’ means that user has no privileges for controlling this partition by means of this device (see the section 2.2.2). If the message ‘OPERATION NOT COMPLETED’ is showed it means that partition control operation was not completed correctly. It can happen as a result of disconnection of devices and interface RS-485, or zone absence in the partition or console database failure.

SEC.RU | Короткий путь к информации Скачано с sec.ru

⬍ **1200: ARM FAILED** **Second Flore**

For example let the partition number 1200 named "Second floor" failed arming and the message "ARM FAILED" was displayed. To show failed zones press "TRBL" and choose the state "ARM FAILED" by means of " ▸ " or " ◂ ".

Second Flore **ARM FAILED**
ARM FAILED **Door 1**

To get the list of failed zones press "ENT". The console will show the first zone.

By means of " ▸ " and " ◂ " keys it can be possible to scroll all failed zones of partition.

ARM FAILED **ZONE: 002/007**

If zone has no name then its number will be shown formed as “ZONE: Device address / The alarm loop or addressable detector number.

2.2.2.2 Partition control at ‘S2000-K’ keyboards

Partition arming and disarming at ‘S2000-K’ keyboards is identical arming and disarming at panel. See details in ‘S2000-K’ documentation.

2.2.2.3 Touch Memory and Proximity card partition control

Partition can be armed/disarmed by key Touch Memory or Proximity-card. Key (card) have to be saved in console memory (see item 2.1.7.3), has the partition control and have not be saved in ‘S2000-4’ key memory. At first key touch ‘S2000-4’ reader outer LED blinks shortly, after that displays state of controlled partition: flashes if partition armed, off, if disarmed, blinks, if wrecked, in alarm or in fire state. Each next key touch partition armed, if it was disarmed, and disarmed, if it was in state ‘arm’, ‘fault’, ‘alarm’ or ‘fire’. Partition can be controlled at other ‘Orion’ system devices, which have port for Touch Memory or Wiegand reader: ‘S2000-2’, ‘Signal-20P SMD’ version 2.01 and above, ‘S2000-KDL’ version 1.15 and above.

2.2.3 Device control functions

This control functions are destined for manual remote control by loops and alarm panel outputs (arming, disarming, alarm reset and so on). They are available by user which has control rights ‘W/O PART CONTROL’: ‘ARM and DISARM’, ‘ARM w/o DISARM’ or ‘MAX AUTHORITY’. In order to get access to control functions, press ‘ENT’ and input password. If password is correct, console forms message ‘USER'S CODE ENTR’ and grants acces to control functions. Console has parameter ‘CODE REQUIRED’ allowing acces to these functouns without password entering. If this parameter has value ‘–’ (Off), device control functions are accessible without password entering. To exit from control mode use button ‘CLR’. Console exits from control mode automatically after 2 min of stopping work with console keyboard.

The most important of control functions are loop arm and disarm (arming / disarming of single loop, group of loops and all device loops), restore from alarms and viewing zone states. User with device control privileges can control any device or zone in the system. Also console has some other functions: viewing of loop resistance, temperatures, levels of smoke content and other values being measured by the alarm panel, manual control by alarm panel's outputs (relays) and ‘S2000-ASPT’ devices, time and date changing.

2.2.3.1 Arming/disarming control of device alarm loops

Console allows arming and disarming device zones. A command of individual, group or common arming and disarming can be given to any connected device. The single loop arming/disarming command is designated for the given loop of the given device. The group

SEC.RU | Короткий путь к информации Скачано с sec.ru

arming/disarming command is designated for all given device loops with group arming attribute. The common arming/disarming command is designated for all given device loops.

Single loop arming

ENTER CODE:_	Type password.
⬍1 ARM	Select ‘ARM’ menu item by ‘▶’, ‘◀’ and ‘ENT’ keys, or press hot key ‘1’.
⬍11 ARM LOOP	Select ‘ARM LOOP’ menu item by ‘▶’, ‘◀’ and ‘ENT’ keys, or press hot key ‘1’.
ADDRESS:_	Enter device address (valid values from 1 to 127), or select valid address value by ‘▶’, ‘◀’ buttons and press ‘ENT’.
ENTER LOOP#:_	Type loop number, or select valid value by ‘▶’, ‘◀’ buttons and press ‘ENT’.

Group arming

	Type password.
⬍1 ARM	Select ‘ARM’ menu item by ‘▶’, ‘◀’ and ‘ENT’ keys, or press hot key ‘1’.
⬍12 ARM GROUP	Select ‘ARM GROUP’ menu item by ‘▶’, ‘◀’ and ‘ENT’ keys, or press hot key ‘2’.
ADDRESS:_	Enter device address (valid value from 1 to 127), or select valid address value by ‘▶‘, ‘◀‘ keys and press ‘ENT’.

Common arming

	Type password.
⬍1 ARM	Select ‘ARM’ menu item by ‘▶’, ‘◀’ and ‘ENT’ keys, or press hot key ‘1’.
⬍13 ARM ALL	Select ‘ARM ALL’ menu item by ‘▶’, ‘◀’ and ‘ENT’ keys, or press hot key ‘3’.
ADDRESS:_	Enter device address (valid value from 1 to 127), or select valid address value by ‘▶‘, ‘◀‘ keys and press ‘ENT’.

Single loop disarming

ENTER CODE:_	Type password.
⬍2 DISARM	Select ‘DISARM’ menu item by ‘▶’, ‘◀’ and ‘ENT’ keys, or press hot key ‘2’.
⬍21 DISARM LOOP	Select ‘DISARM LOOP’ menu item by ‘▶’, ‘◀’ and ‘ENT’ keys, or press hot key ‘1’.
ADDRESS:_	Enter device address (valid value from 1 to 127), or select valid address value by ‘▶‘, ‘◀‘ key and press ‘ENT’.
ENTER LOOP#:_	Enter loop number (valid value from 1 to 127), or select valid address value by ‘▶‘, ‘◀‘ key and press ‘ENT’.

Group disarming

SEC.RU | Короткий путь к информации
Скачано с sec.ru

ENTER CODE:_	Type password.
⬍2 DISARM	Select ‘DISARM’ menu item by ‘▸’, ‘◂’ and ‘ENT’ keys, or press hot key ‘2’.
⬍22 DISARM GROUP	Select ‘DISARM GROUP’ menu item by ‘▸’, ‘◂’ and ‘ENT’ keys, or press hot key ‘2’.
ADDRESS:_	Enter device number (valid value from 1 to 127), or select valid address value by ‘▸‘, ‘◂‘ keys and press ‘ENT’.

Common disarming

	Type password.
⬍2 DISARM	Select ‘DISARM’ menu item by ‘▸’, ‘◂’ and ‘ENT’ keys, or press hot key ‘2’.
⬍23 DISARM ALL	Select ‘DISARM ALL’ menu item by by ‘▸’, ‘◂’ and ‘ENT’ keys, or press hot key ‘3’.
ADDRESS:_	Enter device number (valid value from 1 to 127), or select valid address value by ‘▸‘, ‘◂‘ keys and press ‘ENT’.

2.2.3.2 Device alarm reseting

At this command device with given address transmits alarm turned on external device outputs in initial state and arms alarm loop that in alarm or fire state.

ENTER CODE:_	Type password.
⬍3 ALARM RESET	Select ‘ALARM RESET’ menu item by by ‘▸’, ‘◂’ and ‘ENT’ keys, or press hot key ‘3’.
ADDRESS:_	Enter device number (valid value from 1 to 127), or select valid address value by ‘▸‘, ‘◂‘ keys and press ‘ENT’.

2.2.3.3 Manual external device outputs control

Manual relay or ‘open collector’ type outputs controlling given by sertain programs are realized as follows.

ENTER CODE:_	Type password.
⬍4 MANUAL CONTROL	Select ‘MANUAL CONTROL’ menu item by ‘▸’, ‘◂’ and ‘ENT’ keys, or press hot key ‘4’.
⬍41 RELAY	Select ‘RELAY’ menu item by ‘▸’, ‘◂’ and ‘ENT’ keys, or press hot key ‘1’ for quick transition.
ADDRESS:_	Enter device address (valid value from 1 to 127), or select valid address value by ‘▸’ and ‘◂’ keys and press ‘ENT’.
RELAY #:_	Enter relay number (valid value from 1 to 127), or select valid address value by ‘▸’ and ‘◂’ keys and press ‘ENT’.
COMMAND #:_	Enter relay command number (valid value from 1 to 127), or select valid address value by ‘▸’ and ‘◂’ keys and press ‘ENT’.

Presented control programs:

0- return initial state;
1- ‘ON’;
2- ‘OFF’;
3- ‘ON’ for a time given when the device relay output being configured;

SEC.RU | Короткий путь к информации Скачано с sec.ru

4- ‘OFF’ for a time given when the device relay output being configured;
5- blink;
6- blink;
7- blink. Initial state is ‘OFF’;
8- blink. Initial state is ‘ON’.

Attention! The intrusion and fire alarm panelss ignore outputs control commands from the console, if they control the outputs itself (see intrusion and fire alarm panelss maintenance guides).

2.2.3.4 ‘S2000-ASPT’ device control

The console allows users to select launching mode for ‘S2000-ASPT’ device, controlling fire-extinguishing equipment, launch fire-extinguishing equipment and cancel launching.

Selecting fire-extinguishing mode

ENTER CODE:_	Type password.
⬍4 MANUAL CONTROL	Select ‘MANUAL CONTROL’ menu item by ‘▶’, ‘◀’ and ‘ENT’ keys, or press hot key ‘4’.
⬍42 EXTINGUISH	Select ‘EXTINGUISH’ menu item by ‘▶’, ‘◀’ and ‘ENT’ keys, or press hot key ‘2’.
⬍LAUNCH MODE	Select ‘LAUNCH MODE’ menu item by ‘▶’, ‘◀’ and ‘ENT’ keys, or press hot key ‘1’.
ADDRESS:_	Enter ‘S2000-ASPT’ address (valid value from 1 to 127), or select valid address value by ‘▶’, ‘◀’ key and press ‘ENT’.
MODE: MANUAL	Console displays current launching mode. In this example ‘S2000-ASPT’ controls the fire-extinguishing equipment in manual mode. Press ‘ENT’ to select launching mode.
⬍ AUTO	Select launching mode ‘AUTO’ or ‘MANUAL’ by ‘▶’ and ‘◀’ keys, then press ‘ENT’.
MODE: AUTO	If command has succeeded, panel displays new launching mode. In this example ‘S2000-ASPT’ was switched to ‘AUTO’ mode.

Extinguish equipment manual launch

ENTER CODE:_	Type password.
⬍4 MANUAL CONTROL	Select ‘MANUAL CONTROL’ menu item by ‘▶’, ‘◀’ and ‘ENT’ keys, or press hot key ‘4’.
⬍42 EXTINGUISH	Select ‘EXTINGUISH’ menu item by ‘▶’, ‘◀’ and ‘ENT’ keys, or press hot key ‘2’.
⬍LAUNCH/CANCEL	Select ‘LAUNCH/CANCEL’ menu item by ‘▶’, ‘◀’ and ‘ENT’ keys, or press hot key ‘2’.
ADDRESS:10_	Enter ‘S2000-ASPT’ address (valid value from 1 to 127), or select valid address value by ‘▶‘, ‘◀‘ key and press ‘ENT’. In this example address 10 was selected.
LAUNCH STATE: ARMED	Console displays current state of ‘S2000-ASPT’ device controlling the extinguish equipment. In the example below ‘S2000-ASPT’ device is ready for extinguishing equipment launching if the fire alarm conditions has been detected by fire

SEC.RU | Короткий путь к информации Скачано с sec.ru

detectors, or manual alarm call pointhas been activated,or manual launching command has been given.

⬍LAUNCH	Select ‘LAUNCH’ for selecting launching command and press ‘ENT’.
CONFIRM LAUNCH DEVICE: 10	Press ‘ENT’ to confirm launch and launching procedure will be started.
LAUNCH STATE: LNCH DELAY	The console will display the new state of ‘S2000-ASPT’ device. ‘S2000-ASPT’ device enter the launching delay mode. If it is necessary to cancel launching press ‘ENT’,
⬍CANCEL	then select ‘CANCEL’ and press ‘ENT’.
LAUNCH STATE: ARMED	The extinguishing equipment launch has canceled.

2.2.3.5 Request for loop state

ENTER CODE:_	Type password.
⬍5 REQUEST INFO	Select ‘REQUEST INFO’ menu item by ‘▶’, ‘◀’ and ‘ENT’ keys, or press hot key ‘5’.
⬍51 ZONE STATE	Select ‘ZONE STATE’ menu item by ‘▶’, ‘◀’ and ‘ENT’ keys, or press hot key ‘1’.
ADDRESS:2_	Enter device number (valid value from 1 to 127), or select valid address value by ‘▶’, ‘◀’ key and press ‘ENT’.
ENTER LOOP#:17_	Enter loop number, or select valid address value by ‘▶’, ‘◀’ key and press ‘ENT’.
⬍002/017: ARM FAILED	If the state was got it is displayed in following format: ‘⬍ device address / loop number:state’. In this example selected loop has ‘ARM FAILED’ state. Each 0,5 seconds the console automatically reguests state of selected alarm loop. Use the ‘▶’, ‘◀’ keys to view states of other loops of selected device. The loop states are described in appendix B.

2.2.3.6 Alarm loop resistance measurement

This command allows estimating loop resistance value, device power voltage, the temperature or smokiness. The estimated value depends on intrusion and fire alarm panels being in use. The intrusion and fire alarm panels can return either non-dimentional value given by ADC or measured value supplied by corresponding physical unit.

ENTER CODE:_	Type password.
⬍5 REQUEST INFO	Select ‘REQUEST INFO’ menu item by ‘▶’, ‘◀’ and ‘ENT’ keys, or press hot key ‘5’.
⬍52 ZONE ADC	Select ‘ZONE ADC’ menu item by ‘▶’, ‘◀’ and ‘ENT’ keys, or press hot key ‘2’.
ADDRESS:_	Enter the device adddress (valid value from 1 to 127), or select valid address value by ‘▶’, ‘◀’ key and press ‘ENT’.
ENTER LOOP#:17_	

SEC.RU | Короткий путь к информации Скачано с sec.ru

Type alarm loop number or select value by keys ‘ ▶ ’, ‘ ◀ ’ key and press ‘ENT’.

⬍ 002/017: 51

If the command was successfully comleted ADC or measured value is displayed in format:
‘⬍ device address / loop number: value’. In this example the measured by ADC value of loop № 17 of device with address 2 is equal to 51. Each 0,5 seconds console automatically refreshes given loop ADC value. By means of buttons ‘ ▶ ‘, ‘ ◀ ‘other loop ADC values of given device can be viewed.

The following tables contain couples of loop resistance and corresponding ADC value. ADC value can vary from 0 to 255. Value 0 corresponds to loop open circuit, value 255 corresponds to to short circuit.

a) Correspondence between loop resistance and ‘Signal-20P’ device ADC value:

alarm loop resistance	0	2,0 kOhm	4,7 kOhm	6,0 kOhm	Open
ADC value	255	89	46	38	0

Normal range for fire loop (type 1, 2, 3) and for alarm loop with tamper checking (type 5) is from 2,0 kOhm to 6,0 kOhm.

Normal range for alarm loop (type 4) is from 2,0 kOhm to 11,0 kOhm.

б) Correspondence between loop resistance and ‘S2000-4’ ADC device value:

alarm loop resistance	0	1 kOhm	2 kOhm	4,7 kOhm	6 kOhm	10 kOhm	16 kOhm	Open
ADC value for **S2000-4**	255	140	93	49	40	25	16	0
ADC value for **S2000-4-01**	255	229	153	81	66	42	27	0

This table can be found in maintenance guide of ‘S2000-4’ device.

Normal range for fire and alarm loops is from 2,0 kOhm to 6,0 kOhm.

B) Correspondence between alarm loop resistance and ‘Signal-20’ device ver 1.60, 1.61 and below ADC value:

alarm loop Resistance	0	2,0 kOhm	8,2 kOhm	11,0 kOhm	Open
ADC value	255	159	51	39	0

Normal range is from 2,0 kOhm to 11,0 kOhm.

д) Correspondence between loop resistance and ‘Signal-20’ device series 2 ADC value:

alarm loop Resistance	0	2,0 kOhm	4,7 kOhm	6,0 kOhm	Open
ADC value	255	89	46	38	0

2.2.3.7 Console date and time setting

Time setting

ENTER CODE:_

Type password.

⬍ 6 AUX FUNCTIONS

Select ‘AUX FUNCTIONS’ menu item by ‘ ▶ ’, ‘ ◀ ’ and ‘ENT’ keys, or press hot key ‘6’.

⬍ 61 SET TIME

Select ‘SET TIME’ menu item by ‘ ▶ ’, ‘ ◀ ’ and ‘ENT’ keys, or press hot key ‘1’.

SEC.RU | Короткий путь к информации Скачано с sec.ru

TIME: HH:MM	Current time is displayed by LCD in HH:MM format (hours and minutes). Enter new time.

After changing time console forms two messages: 'TIME CHANGED' and 'TIME STAMP'. Message 'TIME CHANGED' informs when user has changed time. Message 'TIME STAMP' shows user time value.

Date set

ENTER CODE:_	Type password.
⬍6 AUX FUNCTIONS	Select 'AUX FUNCTIONS' menu item by '▶', '◀' and 'ENT' keys, or press hot key '6'.
⬍62 SET DATE	Select 'SET DATE' menu item by '▶', '◀' and 'ENT' keys, or press hot key '6'.
DATE: DD.MM.YY	Current time is displayed on LCD in ДД.ММ.ГГ format (day, month and year). Enter new date.

After date changing console forms two messages: 'DATE CHANGED' and 'DATE'. Message 'DATE CHANGED' informs when user has changed date. Message 'DATE' displays user date value.

2.2.3.8 Printing event buffer

This function allows to print whole event buffer (last 1023 events).

ENTER CODE:_	Type password.
⬍6 AUX FUNCTIONS	Select 'AUX FUNCTIONS' menu item by '▶', '◀' and 'ENT' keys, or press hot key '6'.
⬍63 PRINT LOG	Select 'PRINT LOG' menu item by '▶', '◀' and 'ENT' keys, or press hot key '3'.

2.2.3.9 'S2000-IT' phone communicator message buffer cleaning

If 'S2000-IT' phone communicator message transition speed is higher then phone line message transition one, message buffer of 'S2000-IT' can be overflowed in short time. Normally emptying of buffer can take a long time. Console can send command to empty message buffer without event transition through phone line.

ENTER CODE:_	Type password.
⬍6 AUX FUNCTIONS	Select 'AUX FUNCTIONS' menu item by '▶', '◀' and 'ENT' keys, or press hot key '6'.
⬍64 CLR COMM MSG	Select 'CLR COMM MSG' menu item by '▶', '◀' and 'ENT' keys, or press hot key '4'.
ADDRESS:_	Enter 'S2000-IT' phone communicator number (valid value from 1 to 127), or select valid address value by '▶', '◀' key and press 'ENT'.

2.2.3.10 Alarm message indication reset

In alarm message indication mode console requires that user views all alarm messages. Indication of each alarm message resets by 'CLR' key (see item 2.2.1). Console does not transmit in time indication mode while all alarm messages are not viewed. If number of alarm messages is too big (it is possible during mounting, defect of devices or 'RS-485' line) then each message reset by 'CLR' key too tiresome. This function can reset indication of all alarm messages in console buffer.

SEC.RU | Короткий путь к информации Скачано с sec.ru

ENTER CODE:_	Type password.
⬍6 SERVICE	Select ‘SERVICE’ menu item by ‘ ▸ ’, ‘ ◂ ’ and ‘ENT’ keys, or press hot key ‘6’.
⬍65 CANCEL ALARM	Select ‘CANCEL ALARM’ menu item by ‘ ▸ ’, ‘ ◂ ’ and ‘ENT’ keys, or press hot key ‘5’.

During execution of this operation the console cancels all alarm messages. Of course, all alarm messages leave in console event buffer and can be viewed or printed.

2.2.4 Device and console programming functions

Programming functions are designed for configuring console and intrusion and fire alarm panelss. This function is protected by password and is available for user having engineer password (password number 1). To get access to programming functions press key ‘PRG’ and input engineer password. Enter from 1 to 8 password digits and press key ‘ENT’. If password is correct, console displays message ‘PROGRAMMING’ and grants access to functions. To return from programming mode into time displaying mode use button ‘CLR’. Panel automatically exits from programming mode after 2 min if there were no key pressimgs during this time.

Console provides such functions as time setting and clock correction, setting console date, changing device network address, programming and changing addresses of 2-wire devices, setting console parameters, password setting, personal computer programming.

2.2.4.1 Date and time settings and clock correction

Time setting

	Enter the programming menu (press button ‘PRG’).
ENTER CODE:_	Type engineer password.
⬍1 CLOCK SETUP	Select ‘CLOCK SETUP’ menu item by ‘ ▸ ’, ‘ ◂ ’ and ‘ENT’ keys, or press hot key ‘1’.
⬍ SET TIME	Select ‘SET TIME’ menu item by ‘ ▸ ’, ‘ ◂ ’ and ‘ENT’ keys, or press hot key ‘1’.
TIME: HH:MM	LCD displays current time in format HH:MM (hours and minutes). Input new time.

Clock correction

Clock correction allows time correcting for clock accuracy adjustment. The correction value can be varied in range -120 ÷ +120 seconds and will be added to the current time during every day with discreteness 1 s. For example, if console clock is known to be 5 seconds slow per day, it should enter the correction value being equal to +5.

	Enter in programming menu (press button ‘PRG’).
ENTER CODE:_	Type enginner password.
⬍1 CLOCK SETUP	Select ‘CLOCK SETUP’ menu item by ‘ ▸ ’, ‘ ◂ ’ and ‘ENT’ keys, or press hot key ‘1’.
⬍CALIBRATION VAL	Select ‘CALIBRATION VAL’ menu item by ‘ ▸ ’, ‘ ◂ ’ and ‘ENT’ keys, or press hot key ‘2’.

SEC.RU | Короткий путь к информации
Скачано с sec.ru

SEC/DAY: 0	LCD displays current correction value (0 for our example). By means of ‘▶‘ and ‘◀‘keys select new correction value and press ‘ENT’.

Date setting

	Enter the programming menu (press button ‘PRG’).
ENTER CODE:_	Type engineer password.
⬍2 DATE	Select ‘DATE’ menu item by ‘▶’, ‘◀’ and ‘ENT’ keys, or press hot key ‘2’.
DATE: DD.MM.YY	LCD displays current date in DD.MM.YY format (day, month and year). Input new date.

2.2.4.2 RS-485 device address changing

	Enter in programming menu (press button ‘PRG’).
ENTER CODE:_	Type engineer password.
⬍3 ADDRESSES	Select ‘ADDRESSES’ menu item by ‘▶’, ‘◀’ and ‘ENT’ keys, or press hot key ‘3’.
⬍RS485 DEVICES	Select ‘RS485 DEVICES’ menu item by ‘▶’, ‘◀’ and ‘ENT’ keys, or press hot key ‘1’.
ADDRESS:_	Enter current device address (valid value from 1 to 127), or select valid address value by ‘▶’, ‘◀’ keys and press ‘ENT’.
NEW ADDRESS:_	Enter new device address (valid value from 1 to 127), or select valid address value by ‘▶’, ‘◀’ keys and press ‘ENT’.

2.2.4.3 2-wire devices adresses changing and programming

2-wire devices addresses changing

2-wire devices address can be changed in case of it is known.

	Enter in programming menu (press button ‘PRG’).
ENTER CODE:_	Type engineer password.
⬍3 ADDRESSES	Select ‘ADDRESSES’ menu item by ‘▶’, ‘◀’ and ‘ENT’ keys, or press hot key ‘3’.
⬍2-WIRE DEVICES	Select ‘2-WIRE DEVICES’ menu item by ‘▶’, ‘◀’ and ‘ENT’ keys, or press hot key ‘2’.
⬍CHANGE ADDRESS	Select ‘CHANGE ADDRESS’ menu item by ‘▶’, ‘◀’ and press ‘ENT’.
RS485 ADDR:_	Enter ‘S2000-KDL’ address (valid value from 1 to 127), or select valid address value by ‘▶‘, ‘◀‘ keys and press ‘ENT’.
CURRENT ADDR:_	Enter 2-wire device address (valid value from 1 to 127) to be changed, or select valid 2-wire device address value by ‘▶’, ‘◀’ keys and press ‘ENT’.
NEW ADDR:_	Enter new 2-wire device address (valid value from 1 to 127), or select new 2-wire device address value by ‘▶’, ‘◀’ keys and press ‘ENT’.

If command has successfully completed, console makes sound signal ‘Success’, and ‘S2000-KDL’ sends console the message about disconnecting of 2-wire device with old address

SEC.RU | Короткий путь к информации Скачано с sec.ru

and connecting device with new address followed by state information. In case of operation faulting the console makes sound signal ‘Error’ and displays diagnostic message: ‘COMMAND ERROR: DEVICE OFF LINE’, ‘COMMAND ERROR: UNKNOWN COMMAND’, ‘COMMAND ERROR: ADDR UNKNOWN’ (2-wire device is not connected to ‘S2000-KDL’), ‘COMMAND ERROR: ADDR OCCUPIED’ (programming address has occupied by already existing 2-wire device) or ‘COMMAND ERROR’ (operation fault).

2-wire device addresses programming

2-wire device address programming should be made if it addresses are unknown. To programming 2-wire devices address refer to their maintenance guides. Enter the ‘S2000-KDL’ device into address programming mode:

	Enter in programming menu (press button ‘PRG’).
ENTER CODE:_	Type engineer password.
⬍3 ADRESSES	Select ‘ADDRESSES’ menu item by ‘ ▸ ’, ‘ ◂ ’ and ‘ENT’ keys, or press hot key ‘3’.
⬍2-WIRE DEVICES	Select ‘2-WIRE DEVICES’ menu item by ‘ ▸ ’, ‘ ◂ ’ and ‘ENT’ keys, or press hot key ‘2’.
⬍ PROGR ADDRESS	Select ‘PROGR ADDRESS’ menu item by ‘ ▸ ’, ‘ ◂ ’ and ‘ENT’ keys.
RS485 ADDR:_	Enter ‘S2000-KDL’ address (valid value from 1 to 127), or select valid address value by ‘ ▸ ’, ‘ ◂ ’ keys and press ‘ENT’.
CURRENT ADDR:_	Enter programming 2-wire device address (valid value from 1 to 127), or select valid address value by ‘ ▸ ’, ‘ ◂ ’ keys and press ‘ENT’.
ADDR PROGRAMM...	If ‘S2000-KDL’ complete address-programming command, LCD will displays message ‘ADDR PROGRAMM...’. ‘S2000-KDL’ enter the address programming mode. Press ‘CLR’ to cancel address programming.

To programming 2-wire device address make all reguired steps described in device maintenance guide. The device address having set, ‘S2000-KDL’ automaticalle exit address programming mode, the console makes sound signal ‘Success’ and displays messages about device states. If operation faults the console makes sound signal ‘Error’ and displays diagnostic messages: ‘COMMAND ERROR: DEVICE OFF LINE’, ‘COMMAND ERROR: UNKNOWN COMMAND’, ‘COMMAND ERROR: ADDR OCCUPIED’ or ‘COMMAND ERROR’.

2.2.4.4 Console extra settings

Console settings include next options:

1) “**ALARM SOUND**” is alarm indication mode. This mode can be on or off;

2) “**CODE REQUIRED**” is device control function access restriction mode. Device control functions are protected by passwords, if parameter is on. If parameter is off control functions are accessible without password by ‘ENT’ key pressing;

3) “**USER CODE PRG**” - permission / deny user password changing. If parameter on, user has opportunity to change its password at console key board (see item 2.2.4.5);

4) “**DEFLT PROTECT**” – protection console configuration reset in default values. If parameter is on, resetting to the default values is prohibited, otherwise configuration resetting is available, as described in item 2.2.5.

SEC.RU | Короткий путь к информации
Скачано с sec.ru

5) "**CODE LENGTH**" – maximum symbol number in user password (from 1 to 8). Password accepted automatically when it length is equal to given value. If the password is shorter then it needs to be finished by 'ENT' key pressing.

6) "**AUX as BURGLAR**" - on / off mode, in which auxiliary loop is interpreted as intrusion alarm. If this mode is on, auxiliary alarm is interpreted as 'Intrusion alarm', and recovery is interpreted as 'Armed'. Parameter is applied to all technological system loops. It can be used in alarm systems, which need auto recovering after alarm.

Enter in programming menu (press button "PRG').

ENTER CODE:_

Type engineer password.

⬍ 5 SETTINGS

Select "SETTINGS" menu item by "▸", "◂" and "ENT" keys, or press hot key "5".

⬍ EXTRA SETTINGS

Select "EXTRA SETTINGS" menu item by "▸", "◂" and "ENT" keys, or press hot key "1".

ALARM SOUND:	**+**
CODE REQUIRED:	**+**
USER CODE PRG:	**-**
DEFLT PROTECT:	**-**
CODE LENGTH =4	
AUX as BURGLAR:	**-**

Select parameter by "▸" and "◂" keys. Indicator displays current value of selected parameter. Parameter "MAX.PASSWORD" has numerical value. Other parameters have values "ON" and "OFF". Value "ON" as "+" and value "OFF" is displayed as "-". To inverse parameter value press "ENT". To edit parameter "MAX.PASSWORD" press "ENT", input new value and finish input by pressing "ENT" button.

This example demonstrate default parameter values.

2.2.4.5 Password management

Password management includes adding new passwords, changing and removing available passwords.

Note

1. Engineer password (password number 1) can be only changed.
2. If password already exists, the password with the same number cannot be added.
3. Several identical passwords cannot exist.
4. If password is not exists it cannot be removed or changed.

Adding and changing password

Enter in programming menu (press "PRG" button).

ENTER CODE:_

Type engineer password.

⬍ 5 SETTINGS

Select "SETTINGS" menu item by "▸", "◂" and "ENT" keys, or press hot key "5".

⬍ USER CODES

Select "USER CODES" menu item by "▸", "◂" and "ENT" keys, or press hot key "2".

USER NUMBER:_

Enter password number (from 1 to 2047), or select valid value by "▸", "◂" keys and press "ENT".

⬍ ADD NEW
⬍ CHANGE

LCD displays the first available action. Scroll the action list by "▸", "◂" keys. For example, engineer password can only be changed, user's passwords can be changed or removed. Not existing password can be added. Select "ADD NEW" for

SEC.RU | Короткий путь к информации Скачано с sec.ru

adding new password or “CHANGE” for changing existing password.

NEW CODE:	Type password and press “ENT”. Typing symbols will be displayed as “*”.If signal “Error” has sounded it indicates after password typing it indicates that this password has already existed and if so enter another password.
CONFIRM:	Type password again. If signal “Error” has sounded it indicates that first typed password differs from the second typed password.
◆W/O PART CONTRL **◆ W. PART CONTROL**	For direct device loop operation, select “W/O PART CONTRL”. For partition operation, select “W. PART CONTROL”.
	Now set password authority level.
◆ ARM and DISARM **◆ ARM w/o DISARM** **◆ MAX AUTHORITY**	Variant 1. Password for direct device loop operation. Select one of offered loop control access levels (“ARM and DISARM”, “ARM w/o DISARM”, “MAX AUTHORITY”) and press “ENT”.
	Variant 2. Password for partition operation.
AUTHORITY #:_	Number of authority level has been requested. Authority level describes the user rights for partitions operation. Valid values are from 1 to 252. Authority level settings are described in the item 2.1.7.3.

Console allows password programming as PIN-codes, Touch Memory keys or Proximity cards. Touch Memory keys and Proximity cards are entered from Touch Memory or Proximity readers connected to “S2000-4” or “S2000-2” device identically to the procedure described above replacing symbol typing by key touching or card reading.

IMPORTANT! Touch Memory keys or Proximity cards can be read by the console only if they are not writen in ‘S2000-4’ or “S2000-2” device configuration.

Deleting password

Enter in programming menu (press button “PRG”).

ENTER CODE:_	Type engineer password.
◆ 5 SETTINGS	Select “SETTINGS” menu item by “▶”, “◀” and “ENT” keys, or press hot key “5”.
◆ USER CODES	Select “USER CODES” menu item by “▶”, “◀” and “ENT” keys, or press hot key “2”.
USER NUMBER:_	Enter password number (from 1 to 2047), or select valid value by “▶”, “◀” keys and press “ENT”.
◆ DELETE	Select “DELETE” for deleting password.

SEC.RU | Короткий путь к информации
Скачано с sec.ru

Changing own password by user

When in system operating users can change own password values from 'S2000M' console. This function is available if parameter "USER CODE PRG" has value "+" (see item 2.2.4.4). By default user can't change his password.

User password change mechanism is described below.

	Press button "PRG".
ENTER CODE:_	Type password to be changed.
◆ CHANGE CODE?	Following by prompt "CHANGE CODE?" press "ENT" to continue password changing or "CLR" to canceling operation.
NEW CODE:	Type new password value.
CONFIRM:	Type password again. If signal "Error" has sounded it indicates that first typed password differs from the second typed password.

2.2.4.6 Console address setting in prorgamming mode

This function changes console address in programming mode. This address is necessary when configuring the console with the help of "pprog.exe"

	Enter in programming menu (press button 'PRG').
ENTER CODE:_	Type engineer password.
◆ 5 SETTINGS	Select "SETTINGS" menu item by "▶", "◀" and "ENT" keys, or press hot key "5".
◆ RS485 SETTINGS	Select "RS485 SETTINGS" menu item by "▶","◀" keys and press "ENT", or press hot key "4".
S2000 ADDR =127	Select "S2000 ADDR" menu item by "▶" and "◀" keys. To change address press "ENT", type new value and press "ENT".

2.2.4.7 Console address setting in personal computer work mode

Console address in this mode is the address for polling by 'ARM S2000' and 'ARM Orion Pro' programs.

	Enter to programming menu (press button 'PRG').
ENTER CODE:_	Type engineer password.
◆ 5 SETTINGS	Select "SETTINGS" menu line by "▶", "◀" and "ENT" keys, or press hot key "5".
◆ RS232 SETTINGS	Select "RS232 SETTINGS" menu item by "▶", "◀" keys and press "ENT", or press hot key "5".
S2000 ADDR =127	Select "S2000 ADDR" menu item by by "▶" and "◀" keys. To change address press "ENT", type new value and press "ENT".

2.2.4.8 Console RS-232 interface operative mode settings

RS-232 outputs of 'S2000M' console (GND, DTR and TxD line) can be connected to printer or personal computer supplied with 'ARM S2000', 'ARM Orion' or 'ARM Orion Pro' software. Depending on connected to console equipment or software RS-232 interface mode need to be set by corresponded way.

SEC.RU | Короткий путь к информации Скачано с sec.ru

Console supports the following operative modes through RS-232 interface:

1) "**PRINTER**" is the mode for printering event messages;

2) "**S2000 & PC**" – mode for operating with 'ARM S2000' and 'ARM ORION Pro' programs.

3) "**S2000 / PC**" – RS-232/RS-485 interface converter mode with auto switching in active mode (device operation mode) when personal computer fails. It is designed to reserve 'ARM Orion' operations by the 'S2000M' console.

The default parameter value is "PRINTER". To change parameter value make the following steps.

	Enter in programming menu (press button 'PRG').
ENTER CODE:_	Type engineer password.
⬍ 5 SETTINGS	Select "SETTINGS" menu item by "▶", "◀" and "ENT" keys, or press hot key "5".
⬍ RS232 SETTINGS	Select "RS232 SETTINGS" menu item by "▶","◀" keys and press "ENT", or press hot key "5".
RS232 MODE: PRINTER	Indicator will displays the current operative mode. To change mode press 'ENT' key.
RS232 MODE: ⬍S2000 & PC	Select new mode value by '▶', '◀' keys and confirm selection by pressing 'ENT' key.

For working in 'S2000 & PC' mode set console address (see. 2.2.4.7). Fither set the parameter "PC TIMEOUT" to the value time period reguired for computer presense analysis was made. If computer fails after this period 'READY' indicator will blink (see table 1).

Give console address to work in the 'S2000 & PC' mode. To work in the mode "S2000 / PC" transition delay in active mode from interface conversion mode at personal computer turn off (parameter 'PC TIMEOUT' in menu 'RS232 SETTINGS') need to be set. Delay is given in the seconds in range from 0 to 255 seconds. Default value of this parameter is 80 seconds. Actions for changing this parameter are described below.

	Enter in programming menu (press button 'PRG').
ENTER CODE:_	Type engineer password.
⬍ 5 SETTINGS	Select "SETTINGS" menu item by "▶", "◀" and "ENT" keys, or press hot key "5".
⬍ RS232 SETTINGS	Select "RS232 SETTINGS" menu item by "▶","◀" keys and press "ENT", or press hot key "5".
PC TIMEOUT =80	Select "PC TIMEOUT" menu item. Indicator displays parameter value. To change parameter value press "ENT".
PC TIMEOUT =_	Input new parameter value and press key "ENT".

2.2.4.9 The ring RS-485 interface operative mode settings

Console can work with devices through RS-485 line with ring topology. Ring topology allows preventing the system operability loss when RS-485 line has been broken. When ring

SEC.RU | Короткий путь к информации Скачано с sec.ru

topology using the console poll the devices from both ends of RS-485 line. The ends of RS-485 line are alternately connected to the console with the help of 'S2000-SP1' relay unit.

Refer to the section "Technical support" on NVP 'BOLID' site www.bolid.ru for additional information.

To enter RS-485 interface operative mode:

	Press 'PRG' key.
ENTER CODE:_	Type engineer password.
⬍ 5 SETTINGS	Select "SETTINGS" menu item by " ▸ ", " ◂ " and "ENT" keys, or press hot key "5".
⬍ RS485 SETTINGS	Select "RS485 SETTINGS" menu item by " ▸ "," ◂ " keys and press "ENT", or press hot key "4".

One should set several parameters that are listed below:

"**RING TOPOLOGY**" – set parameter to the ON value ("+" displayed). Default value is OFF ("–").

"**SWITCH ADDR**" – type the address of RS-485 line switcher unit ('S2000-SP1'). Unit periodically connect console to first or second end of RS-485 line. Default address value is 126.

"**RATE NO FLT**" – set the period for line ends switching if RS-485 interface line faults are not detected. Valid range is from 1 to 255 minutes. Default value is 240.

"**RATE FLT**" - set the period for line ends switching if RS-485 interface line faults are detected. Valid range is from 1 to 255 seconds. Default value is 2.

2.2.4.10 Console entering into programming mode

In programming mode console database is configured at personal computer with '**pprog.exe**' program.

	Press button 'PRG'.
ENTER CODE:_	Type engineer password.
⬍ 5 SETTINGS	Select "SETTINGS" menu item by " ▸ ", " ◂ " and "ENT" keys, or press hot key "5".
⬍REMOTE PROGRAM	Select "RS232 SETTINGS" menu item by " ▸ "," ◂ " keys and press "ENT", or press hot key "6".
PROGRAMMING	When LCD displays "PROGRAMMING MODE" the console enter the remote programming mode through RS-485 or RS-232 interfaces. To exit from programming mode press key 'CLR'.

2.2.5 Reset settings to default values

If the engineer password has lost, there is mechanism for resetting into default value. After console resetting the event buffer will be cleared and the configuration will be returned to default value, with the engineer password being set to the default value <123456>.

Attention! Resetting is possible only if option "**DEFLT PROTECT**" is off (it can be available from menu '**⬍5 SETTINGS**", subitem "**⬍EXTRA SETTINGS**"). Default option "**DEFLT PROTECT**" value is OFF ("-"). If resetting is to be prohibited, then turn the option '**DEFLT PROTECT**' on. If engineer password is lost and "**DEFLT PROTECT**" is set, then CALL FOR NVP 'BOLID' SERVICE.

To reset default values turn on console with pressed keys "**CLR**" and "**MEM**". LCD displays "**LOAD DEFAULT SETTINGS?**". Key-up the "**CLR**" and "**MEM**" keys. Press "**ENT**" to confirm operation or "**CLR**" to exit from resetting procedure. If the operation was

SEC.RU | Короткий путь к информации Скачано с sec.ru

confirmed the 20 minutes delay will be counted, with the time before password resetting being displayed by LCD. At the end of 20 min delay console configuration takes default value. In any delayed time resetting can be cancelled by pressing button "**CLR**".

2.2.6 Console version update

Console software can be updated. The opportunity can be used for getting new options and remove possible current version bugs. For update are required: PC with Windows 98/2000/XP, connection cable for RS-232 interface, update program **'ORION_PROG.exe'** and file with libraries for different 'S2000M' console versions (extention 'chp'). Console connection to the computer for version update is shown on the Figure 5. Cable has to correspond shown on the picture type. **'ORION_PROG.exe'** program and file with libraries can be gat by electronic mail, on address **info@bolid.ru**.

Versions update steps. Set 'S2000M' console in programming mode. Run **'ORION_PROG.exe'**. Select COM-port, connected to the consol. Run device search, pressing 'Start searching' button. Program have to detects 'S2000M' console (displayed as 'S2000' console version 2.04) and, possible, some other devices connected through RS-485 interface. Select it from detected device list and press 'PRG'. Open file with console libraries. Program displays list of versions for given console device. Select required version and press 'Write' key. After few seconds program prepare data for writing, and write new firmware. Write operation console has to shows 'FIRMWARE LOADING...' on the indicator, and LED indicator 'READY' blinks, indication data transmission to the console.

3 STORAGE

3.1 At console store acids, alkalis, corrosive gases and other noxious corrosive vapors have to absent.

3.2 Storage life in package has to be below 12 monthes.

4 TRANSPORTATION

4.1 Packed consoles transportation can be done by any transport in covered containers.

5 CERTIFICATION INFORMATION

6.1 S2000M intrusion and fire-alarm console corresponds to Russian Federation state standards and have:

- certificate of conformity to Russian state standards on alarm and fire systems;
- certificate of conformity to Russian fire norms.

6.2 NVP BOLID's quality management corresponds to ISO 9001 standard.

6 INFORMATION ABOUT MANUFACTURER

NVP BOLID
Pionerskaya st., 4
Korolev
Moscow region

Russia

141070
Tel/fax: +7 (495) 513 4342, 513 4351, 516 9372, 516 9373, 777 4020
http://www.bolid.ru
E-mail: info@bolid.ru

SEC.RU | Короткий путь к информации
Скачано с sec.ru

7 WARRANTY

Manufacturer warrants it ‘S2000M’ product to be in conformance with specification under normal transportation, storage, mounting and maintenance.

Manufacturer warrants ‘S2000M’ product to be free from defects in materials and workmanship for 18 months since putting in to operation, but no more then 24 months since production under normal use and service.

‘S2000M’ fire and alarm console _____
Product designation serial number

produced, tested by quality control department in compliance with state standards and specifications, and packed by NVP ‘BOLID’ company.

Q.C.
STAMP _____ _____
Name Date

SEC.RU | Короткий путь к информации Скачано с sec.ru

Appendix A 'S2000M' console dimensions

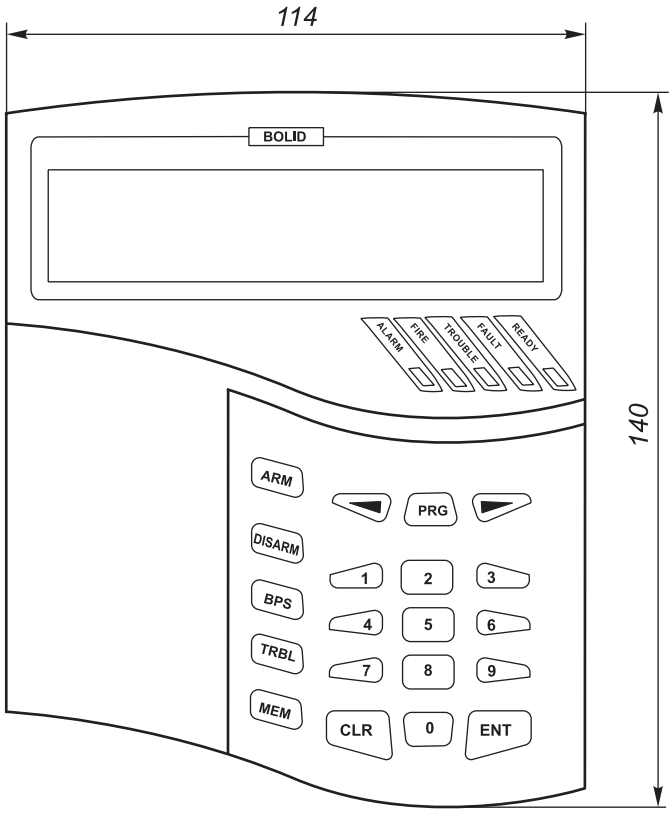

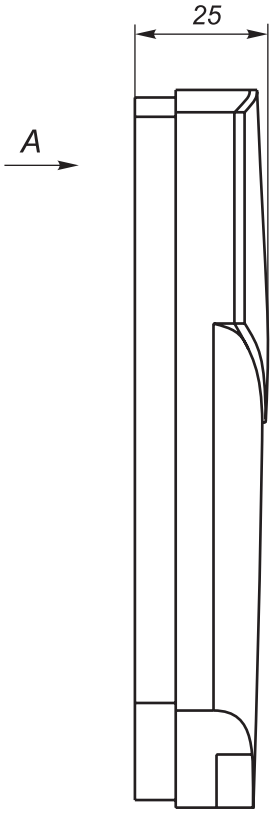

View A

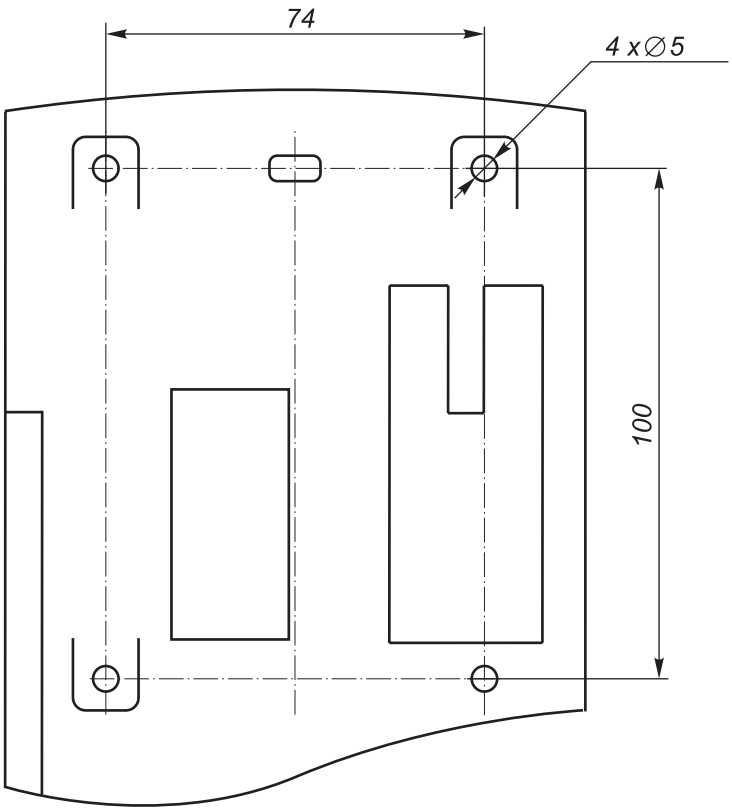

SEC.RU | Короткий путь к информации
Скачано с sec.ru

Appendix B Zone status list

Zone statuses are listed in priority decreasing order. If different zones of one partition have various statuses, the resulting status of the partition will be defined by the zone status of the highest priority. For example, if the zone statuses are "Zone armed", "Disarmed", "Loop short circuit" and "Fire prealarm", then the resulting partition status is "Fire prealarm".

State	Description	Displayed
"EXTINGUISHING"	Fire extinguishing is in process (the launching pulse was given out and outflow of fire extinguishing agent has been detected)	**EXTINGUISH**
"EMERGENCY LAUNCHING"	The launching pulse was not given out but outflow of fire extinguishing agent has been detected	**EMERG LNCH**
"LAUNCHING"	The pulse for fire extinguishing equipment launching was given out	**LAUNCHING**
"LAUNCH FAULT"	The fire extinguishing equipment was not successfully launched (the launching pulse was given out but outflow of fire extinguishing agent has not been detected)	**LNCH FAULT**
"LAUNCHING DELAY"	The condition for launching of fire extinguishing equipment has met and launching delay is being counted	**LNCH DELAY**
"LAUNCH BLOCKED"	The launching of fire extinguishing equipment was blocked up (e.g., due to the door opening to the protected area)	**LNCH BLOCK**
"LAUNCH CANCEL"	The launching of fire extinguishing equipment was canceled (e.g., due to the command "Cancel extinguish" given from console or to the pressing "RESET" key of "S2000-ASPT")	**LNCH CANCL**
"FIRE ALARM"	Two threshold detectors in an alarm loop have been activated, or fire delay has elapsed, or “Fire” threshold of quantity measured by addressable analogue zone (temperature or smoke) has exceeded	**FIRE ALARM**
"FIRE PREALARM"	There is probability of fire. Threshold detectors in an alarm loop have been activated, or alarm acknowledgment from a smoke threshold detector, or "Prealarm" threshold of quantity measured by addressable analogue zone (temperature or smoke) has exceeded	**F PREALARM**
"SILENT ALARM", or "ATTACK"	Silent zone alarm (usually controls alarm keys)	**SLNT ALARM**
"INTRUSION ALARM"	Intrusion zone alarm (alarm loop has been broken or alarm addressable detector has been activated)	**ALARM**

SEC.RU | Короткий путь к информации Скачано с sec.ru

State	Description	Displayed
"ENTRY ALARM"	Entry zone alarm if entry delay has not elapsed	**ENTR ALARM**
"ENCLOSURE TAMPERING"	Device enclosure tamper detector has been broken	**TAM ALARM**
"2-WIRE LINE SHORT CIRCUIT"	Short circuit in "S2000-KDL" 2-wire addressable line	**2WRE SHORT**
"2-WIRE LINE TROUBLE"	Trouble in "S2000-KDL" 2-wire addressable line (usually it is abnormal overvoltage)	**2WRE TRBL**
"DISCONNECTED ALARM LOOP"	The communication between the console and alarm loop or addressable detector or addressable expander circuit being controlled has been lost. The status of such zone is unknown and the console cannot monitor this one. It is typically happens when: 1) the communication between the console and intrusion and fire alarm panels or "S2000-KDL" controller connected via RS-485 line and monitored present zone has been lost; 2) the communication between "S2000-KDL" and addressable detector (expander) connected to its 2-wire line and controlled zone in question has been lost	**DISCONNECT**
"CONFIGURATION ERROR"	Type mismatch of 2-wire line connected addressable device and value given in "S2000-KDL" configuration, or mismatch of zone type and type of device connected to "S2000-KDL"	**CONFIG ERR**
"FIRE TROUBLE"	Fire alarm system failure such as addressable device internal problem (failure of DIP-34A optical system), or "S2000-KPB" device mass and pressure checkout circuit trouble	**FIRE TRBL**
"LOOP OPEN CIRCUIT"	The breaking of alarm loop or addressable expander circuit being controlled	**TRBL OPEN**
"LOOP SHORT CIRCUIT"	The short circuit of alarm loop or addressable expander circuit being controlled	**TRBL SHORT**
"ARMING HAS FAILED"	Arming has failed due to the activated status of detector	**ARM FAILED**
"DISARMED AND NOT READY"	For alarm zones being controlled if disarmed. Zone is not armed with the detector having been activated and so being not ready for arming	**NOT READY**
"DISARMED"	Zone has been disarmed and the detector status is not monitoring	**DISARMED**
"DISARMED AND READY"	For alarm zones being controlled if disarmed. Zone is not armed but it is ready for following arming	**READY**

SEC.RU | Короткий путь к информации
Скачано с sec.ru

State	Description	Displayed
"ARMING DELAY"	Zone is arming (the arming command has been entered but the result of operation has not yet been known) or arming delay is being counted	**ARMING...**
"ZONE ARMED"	Zone is normal armed for alarm loops or alarm addressable detectors, or zone is normal controlled for another loops and addressable detectors, including fire ones	**ARMED**
"BATTERY FAILED"	The backup power supply (storage battery) has failed	**BAT FAIL**
"AC POWER FAILED"	The primary (AC) power supply has failed	**AC FAIL**
"POWER FAILED"	The device power supply is out of range	**POWER FAIL**
"MANUAL EXTINGUISHING"	The automatically launching mode of extinguishing equipment is off	**EX MANUAL**
"THE PUMP IS ON"	The pump is operating	**PUMP ON**
"THE PUMP IS OFF"	The pump is off	**PUMP OFF**
"AUTO EXTINGUISHING"	The automatically launching mode of extinguishing equipment is on	**EX AUTO**
"AUXILIARY ALARM"	Auxiliary alarm loop is broken	**AUX ALARM**
"AUXILIARE NORMAL"	Auxiliary alarm loop is OK (is not broken)	**AUX NORM**
"RELAY DISCONNECTED"	The communication between the console and relay output has been lost with it status being unknown and the console controlling being disabled. It is typically happens when: 1) the communication between the console and relay unit “S2000-KPB” connected to it via RS-485 line has been lost; 2) the communication between “S2000-ASPT” and relay unit “S2000-KPB” connected to it via RS-485 line has been lost; 3) the communication between "S2000-KDL" device and its 2-wired "S2000-SP2" relay unit has been lost.	**RL DISCONN**
"OPEN RELAY OUTPUT"	Open circuit failure of controlling relay output	**RL TRBL O**
"RELAY OUTPUT SHORT CIRCUIT"	Short circuit failure of controlling relay output	**RL TRBL S**
"FIRE EQUIPMENT NORMAL"	Alarm loop controlled fire equipment is operative	**NO TROUBLE**

SEC.RU | Короткий путь к информации Скачано с sec.ru

State	Description	Displayed
"HIGH EMERGENCY LEVEL"	The pressure or water level has exceeded the emergency threshold ("Potok-3N")	**LV TOO HI**
"LOW EMERGENCY LEVEL"	The pressure or water level is below the emergency threshold ("Potok-3N")	**LV TOO LOW**
"HIGH LEVEL"	Increasing of the water or pressure level ("Potok-3N")	**LV HIGH**
"LOW LEVEL"	Reducing of the water or pressure level ("Potok-3N")	**LV LOW**
"NORMAL LEVEL"	The pressure or water level is within normal range ("Potok-3N")	**LV NORMAL**
"TEMPERATURE SENSOR FAULT"	Temperature sensor fails (for temperature zone of "S2000-KDL")	**SENSOR FLT**
"HIGH TEMPERATURE"	The temperature is above "temperature high" threshold (for temperature zone of "S2000-KDL")	**Tº HIGH**
"LOW TEMPERATURE"	The temperature is under "temperature low" threshold (for temperature zone of "S2000-KDL")	**Tº LOW**
"NORMAL TEMPERATURE"	The temperature is within preset range (for temperature zone of "S2000-KDL")	**Tº NORM**
"NORMAL OUTPUT"	Output circuit being controlled is normal operative	**RELAY NORM**
"NORMAL POWER"	The device power supply is OK	**POWER NORM**
"NORMAL AC"	AC power supply (220 V) is OK	**AC NORM**
"NORMAL BACKUP POWER"	Backup power supply (e.g., storage battery) is OK	**BAT NORM**
"NORMAL ZONE"	Zone is in a fault-free state	**NO TROUBLE**
"INITIALIZING"	The console doesn't know zone status and is going to request it from the device This state is possible for few seconds after console power supply turning on unless the console detects all system devices and requests its states. The more devices and controlling zones being integrated into a system the more request-response process is lasted	**REQUEST...**

SEC.RU | Короткий путь к информации
Скачано с sec.ru

Appendix C The list of messages being displayed

Event description	Displayed event name	Category
The condition for launching of fire extinguishing equipment was met and the launching delay is being counted	**LAUNCHING DELAY**	**1**
The pulse for fire extinguishing equipment launching was given out	**LAUNCHING**	**1**
Fire extinguishing is in process (the launching pulse was given out and outflow of fire extinguishing agent has been detected)	**EXTINGUISHING**	**1**
The fire extinguishing equipment was not successfully launched (the launching pulse was given out but outflow of fire extinguishing agent has not been detected)	**LAUNCH FAULT**	**1**
The fire extinguishing equipment was launched in emergency mode (the launching pulse was not given out but outflow of fire extinguishing agent has been detected)	**EMERGENCY LAUNCH**	**1**
The launching of fire extinguishing equipment was blocked up (e.g., due to the door opening into the protected area)	**LAUNCH BLOCKED**	**1**
The launching of fire extinguishing equipment was canceled (e.g., due to the command "Cancel extinguish" given from console or to the pressing "RESET" key of "S2000-ASPT")	**LAUNCH CANCEL**	**1**
Fire alarm	**FIRE ALARM**	**1**
Fire signal has been received and fire alarm is probable	**FIRE PREALARM**	**1**
Intrusion alarm	**INTRUSION ALARM**	**2**
Silent zone alarm	**SILENT ALARM**	**2**
Entry zone alarm	**ENTRY ALARM**	**2**
Open-circuit failure in the alarm loop	**LOOP TRBL OPEN**	**3**
Short circuit in the alarm loop	**LOOP TRBL SHORT**	**3**
Alarm loop has restored after any failure	**LOOP TRBL RST**	**4**
Extinguishing equipment faults	**FIRE TROUBLE**	**3**
Extinguishing equipment is in normal state	**FIRE TRBL RST**	**3**
Zone configuration parameter error	**ZONE CONFIG ERR**	**3**
Addressable detector or expander disconnection from ‘S2000-KDL’	**DISCONNECTED**	**3**
Arming has failed due to the activated status of detector	**ARM FAILED**	**4**
Zone fire alarm has been canceled. Zone is monitoring the detectors.	**ALARM RESET**	**4**
Detector status monitoring has been turned on	**ARMED**	**5**
Exit delay begins after entering arming command	**ARM DELAY**	**5**
The detector status is not monitored	**DISARMED**	**5**
Device or detector case is opened	**TAMPER ALARM**	**3**
Device or detector case is closed	**TAMPER RESTORE**	**3**
Device power supply is out of range	**POWER FAILED**	**3**
Device power supply is restored after failure	**POWER RESTORE**	**3**

SEC.RU | Короткий путь к информации Скачано с sec.ru

Event description	Displayed event name	Category
Battery supply is out of range	**BATTERY FAILED**	**3**
Battery supply is restored	**BATTERY RESTORED**	**3**
AC power has been lost	**AC POWER FAILED**	**3**
AC power has been restored	**AC POWER RESTORE**	**3**
Device was restarted	**DEVICE RESTART**	**3**
The console has no response from the device through RS-485 interface	**DISCONNECTED**	**3**
The console has restored the connection with the device through RS-485 interface	**CONNECTED**	**3**
Device shutoff from ring interface RS-485 branch	**FAIL RS485 LINE**	**3**
Device connection through RS-485 ring interface branch has restored	**RST RS485 LINE**	**3**
Short circuit in 2-wire addressable line	**2WIRE LINE SHORT**	**3**
Open-circuit failure in 2-wire addressable line	**2WIRE LINE OPEN**	**3**
Other troubles in 2-wire addressable line	**2WIRE LINE TRBL**	**3**
2-wire line restored after any failure	**2WIRE LINE RST**	**3**
The automatically launching mode of extinguishing equipment is off	**EX MODE MANUAL**	**4**
The automatically launching mode of extinguishing equipment is on	**EX MODE AUTO**	**4**
The pressure detector has signaled pressure rising	**GAS PRESS SIGNAL**	**8**
There is no expected pressure increase after launching pulse	**PRESSURE FAILURE**	**8**
Fire conditions have been detected	**FIRE SIGNAL**	**8**
The service is required for the detector (for example, the smoke chamber of DIP-34A detector is dusted)	**SERVICE REQUIRED**	**8**
Temperature has exceeded the maximum value	**TEMPERATURE HIGH**	**8**
Temperature has fallen below the minimum value	**TEMPERATURE LOW**	**8**
Temperature has normal value	**TEMPERATURE NORM**	**8**
The heat sensor failure has detected	**HEAT SENSOR FAIL**	**3**
The heat sensor has been restored after failure	**HEAT SENSOR RST**	**3**
Voice notification is starting	**NOTIFICATION ON**	**8**
Voice notification is avoided	**NOTIFICATION OFF**	**8**
The pump is starting	**PUMP ON**	**8**
The pump cuts out	**PUMP OFF**	**8**
The pressure or water level is rising	**LEVEL HIGH**	**8**
The pressure or water level is falling	**LEVEL LOW**	**8**
The pressure or water level is in normal state	**LEVEL NORMAL**	**8**
The pressure or water level has exceeded the emergency threshold	**LEVEL TOO HIGH**	**3**
The pressure or water level has fallen below the emergency threshold	**LEVEL TOO LOW**	**3**
Auxiliary loop alarm	**AUX ZONE ALARM**	**9**
Auxiliary loop restored	**AUX ZONE RESTORE**	**9**
Zone disarmed. Arming is impossible due to detector being in activated state	**NOT READY TO ARM**	**9**
Zone disarmed. Ready for arming.	**READY TO ARM**	**9**
The open-circuit failure of relay output load circuit has been detected	**RELAY TRBL OPEN**	**7**
The short circuit failure of relay output load circuit has been detected	**RELAY TRBL SHORT**	**7**

SEC.RU | Короткий путь к информации
Скачано с sec.ru

Event description	Displayed event name	Category
The relay output load circuit has been restored	**RELAY RESTORE**	**7**
Addressable relay module fails to communicate to “S2000-KDL” or “S2000-ASPT” devices	**RELAY DISCONNECT**	**7**
Addressable relay module restored communication with “S2000-KDL” or “S2000-ASPT” devices	**RELAY CONNECTED**	**7**
Automatic fire extinguishing system was successfully started (exploder or valve circuit has broken)	**RELAY START ACK**	**7**
Automatic fire extinguishing system was not successfully started (exploder or valve circuit has no broken after launching pulse being given)	**RELAY START NACK**	**7**
The partition has been armed	**PART ARMED**	**4**
The partition has been disarmed	**PART DISARMED**	**4**
The user is arming the partition	**PART ARMING**	**4**
The user is disarming the partition	**PART DISARMING**	**4**
The user has entered arming/disarming code	**USER'S CODE ENTR**	**4**
A person was passed into the access zone	**PASSED**	**6**
Access was denied due to the illegal code	**ILLEGAL CODE**	**6**
Access was granted	**ACCESS GRANTED**	**6**
Access was denied due to the low code authority level	**ACCESS DENIED**	**6**
Access is prohibited	**ACCESS CLOSED**	**6**
Access control is deactivated	**ACCESS FREE MODE**	**6**
Access control is activated	**ACCESS NORM MODE**	**6**
Door is opened too long	**DOOR LEFT OPEN**	**6**
Door is closed after blocking in open state	**DOOR CLOSED**	**6**
Door has been opened without access granting	**DOOR FORCED**	**6**
Depending on indicated device this message means either entering to the programming menu or to the password changing mode (for the console) or to the user’s key programming mode (for S2000-4 panel or S2000-2 device)	**PROGRAMMING**	**8**
The user has canceled the audible alert signal provided by fire or fault	**ALARM CANCEL**	**8**
“S2000-IT” has detected the phone line fault	**PHONE LINE TRBL**	**8**
“S2000-IT” connected phone line has been restored	**PHONE LINE REST**	**8**
The messages haven’t been transferred because the “S2000-IT” buffer storage is full	**MSG BUF FULL**	**8**
The event buffer storage has overflowed with some messages having been lost	**MSG BUF OVERFLOW**	**8**
The console is turned on	**S2000 STARTED**	**8**
The printer is on	**PRINTER ON LINE**	**8**
The printer is off or not ready	**PRINTER OFF LINE**	**8**
The user has changed the current date	**DATE CHANGED**	**8**
The user has changed the current time	**TIME CHANGED**	**8**
Date stamp is formed by the console after date changing and once a day	**DATE**	**8**
Time stamp is formed by the console after time changing	**TIME STAMP**	**8**

SEC.RU | Короткий путь к информации Скачано с sec.ru

Event categories:

1 - ‘FIRES’
2 - ‘ALARMS’
3 - ‘FAULTS’
4 - ‘ARM/DISARM’
5 - ‘ZONE ARM/DISARM‘
6 - ‘ACCESS’
7 - ‘RELAY’
8 - ‘SYSTEM INFO’
9 - ‘AUXILIARY’

SEC.RU | Короткий путь к информации
Скачано с sec.ru