РУКОВОДСТВО ПОЛЬЗОВАТЕЛЯ (EN)

ШАССИ МОДУЛЬНОГО ИСТОЧНИКА БЕСПЕРЕБОЙНОГО ПИТАНИЯ SNR

СЕРИИ SM

SNR-UPS-ONM-100-50SMX33
SNR-UPS-ONM-200-50SMX33
SNR-UPS-ONM-300-50SMX33
SNR-UPS-ONM-500-50SMX33

SEC.RU | Короткий путь к информации
Скачано с sec.ru

Concent

Preface 4
Usage 4
Users 4
Note 4
Safety Precautions 5
Safety Message Definition 5
Warning Label 5
Safety Instruction 5
Debug & Operate 6
Maintenance & Replacement 6
Battery Safety 7
Disposal 8
1 UPS Structure and Introduction 9
1.1 UPS structure 9
1.1.1 UPS Configuration 9
1.1.2 UPS Outlook 10
1.1.3 Details of UPS view 13
1.2 Product Introduction 16
1.2.1 UPS System Description 16
1.2.2 Power Module Description 17
1.2.3 Operation Mode 17
2 Installation 21
2.1 Location 21
2.1.1 Installation Environment 21
2.1.2 Site Selection 21
2.1.3 Size and Weight 21
2.2 Unloading and Unpacking 22
2.2.1 Moving and Unpacking of the Cabinet 22
2.2.2 Unpacking Power Modules 24
2.3 Positioning 25
2.3.1 Positioning Cabinet 25
2.3.2 Installing Power Module 27
2.4 Battery 28
2.5 Cable Entry 29
2.6 Power Cables 31
2.6.1 Specifications 31
2.6.2 Specifications for Power Cables Terminal 32
2.6.3 Circuit Breaker 33
2.6.4 Connecting Power Cables 33
2.7 Control and Communication Cables 36
2.7.1 Dry Contact Interface 37

SEC.RU | Короткий путь к информации Скачано с sec.ru

2.7.2 Communication Interface 43
3 UPS and Module Control Panel 44
3.1 LCD panel for Power Module 44
3.1.1 LED Indicator 44
3.1.2 Control and Operation Keys 45
3.1.3 LCD Display 45
3.2 UPS operator panel 47
3.2.1 LED Indicator 47
3.2.2 Control and Operation Keys 49
3.2.3 LCD Touch Screen 49
3.3 Main menu 50
3.3.1 Cabinet Menu 50
3.3.2 Module menu 53
3.3.3 Setting 56
3.3.4 Log menu 64
3.3.5 Operate menu 73
3.3.6 Scope menu 74
4 Operations 76
4.1 UPS Start-up 76
4.1.1 Startup in normal mode 76
4.1.2 Start from battery 77
4.2 UPS Shut down 79
4.3 Procedure for Switching between Operation Modes 79
4.3.1 Switching the UPS from normal mode into battery mode 79
4.3.2 Switching the UPS from normal mode into bypass mode 79
4.3.3 Switching the UPS into normal mode from bypass mode 80
4.3.4 Switching the UPS into maintenance bypass mode from normal mode 81
4.3.5 Switching the UPS into normal mode from maintenance bypass mode 82
4.4 Battery Maintenance 82
4.5 EPO 83
4.6 Installation of parallel operation system 84
5 Maintenance 85
5.1 Precautions 85
5.2 Instruction for maintaining power module 85
5.3. Instruction for Maintaining the monitor & bypass unit 85
5.3.1 Maintaining the monitor & bypass unit for 2-slot and 4-slot cabinet UPS 85
5.3.2 Maintaining the monitor & bypass module for 6-slot, 8-slot and 10-slot cabinet UPS 86
5.4 Battery maintenance 86
5.5 Replacing dust filter (optional) 87
6 Product Specifications 88
6.1 Applicable Standards 88
6.2 Environmental Characteristics 88
6.3 Mechanical Characteristics 89

SEC.RU | Короткий путь к информации Скачано с sec.ru

6.4 Electrical Characteristics 89
6.4.1 Electrical Characteristics (Input Rectifier) 89
6.4.2 Electrical Characteristics (Intermediate DC Link) 89
6.4.3 Electrical Characteristics (Inverter Output) 90
6.4.4 Electrical Characteristics (Bypass Mains Input) 90
6.5 Efficiency 91
6.6 Display and Interface 91

SEC.RU | Короткий путь к информации
Скачано с sec.ru

Preface

Usage

The manual contains information on installation, use, operation and maintenance of modular UPS. Please carefully read this manual prior to installation.

Users

Authorized Person

Note

Our company is providing a full range of technical support and service. Customers can contact our local office or customer service center for help.
The manual will update irregularly, due to the product upgrading or other reasons.
Unless otherwise agreed, the manual is only used as guide for users and any statements or information contained in this manual make no warranty expressed or implied.

SEC.RU | Короткий путь к информации Скачано с sec.ru

Safety Precautions

This manual contains information concerning the installation and operation of modular UPS. Please carefully read this manual prior to installation.
The modular UPS cannot be put into operation until it is commissioned by engineers approved by the manufacturer (or its agent). Not doing so could result in personnel safety risk, equipment malfunction and invalidation of warranty.

Safety Message Definition

Danger: Serious human injury or even death may be caused, if this requirement is ignored.
Warning: Human injury or equipment damage may be caused, if this is requirement is ignored.
Attention: Equipment damage, loss of data or poor performance may be caused, if this requirement is ignored.
Commissioning Engineer: The engineer who installs or operates the equipment should be well trained in electricity and safety, and familiar with the operation, debug, and maintenance of the equipment.

Warning Label

The warning label indicates the possibility of human injury or equipment damage, and advised the proper step to avoid the danger. In this manual, there are three types of warning labels as below.

Labels	Description
Danger	Serious human injury or even death may be caused, if this requirement is ignored.
Warning	Human injury or equipment damage may be caused, if this requirement is ignored.
Attention	Equipment damage, loss of data or poor performance may be caused, if this requirement is ignored.

Safety Instruction

Danger	✧ Performed only by commissioning engineers. ✧ This UPS is designd for commercial and industrial applications only, and is not intended for any use in life-support devices or system.
Warning	✧ Read all the warning labels carafully before operation, and follow the instructions.

SEC.RU | Короткий путь к информации Скачано с sec.ru

	✧ When the system is running , do not touch the surface with this label, to avoid any hurt of scald.
	✧ ESD sensitive components inside the UPS, anti-ESD measure should be taken before handling.

Move & Installation

Danger	✧ Keep the equipment away from heat source or air outlets. ✧ In case of fire, use dry powder extinguisher only, any liquid extinguisher can result in electric shock.
Warning	✧ Don't start the system if any damage or abnormal parts founded. ✧ Contacting the UPS with wet material or hands may be subject to electric shock.
Attention	✧ Use proper facilities to handle and install the UPS. Shielding shoes, protective clothes and other protective facilities are necessary to aviod injury. ✧ During positioning, keep the UPS way from shock or vibration. ✧ Install the UPS in proper environment, more detail in section 2.3.

Debug & Operate

Danger	✧ Make sure the grounding cable is well connected before connecting the power cables, the grounding cable and neutral cable must be in accordance with the local and national codes practice. ✧ Before moving or re-connecting the cables, make sure to cut off all the input power sources, and wait for at least 10 minutes for internal discharge. Use a multi-meter to measure the voltage on terminals and ensure the voltage is lower than 36V before operation.
Attention	✧ The earth leakage current of load will be carried by RCCB OR RCD. ✧ Initial check and inspection should be performed after long time storing of UPS.

Maintenance & Replacement

Danger	✧ All the equipment maintenance and servicing procedures involving internal access need special tools and should be carried out only by trained personnel. The components that can be accessed by opening the protective cover with tools cannot be maintenance by user. ✧ This UPS full complies with "IEC62040-1-1-General and safety requirements for use in operator access area UPS". Dangerous

SEC.RU | Короткий путь к информации Скачано с sec.ru

	voltages are present within the battery box. However, the risk of contact with these high voltages is minimized for non-service personnel. Since the component with dangerous voltage can only be touched by opening the protective cover with a tool, the possibility of touching high voltage component is minimized. No risk exists to any personnel when operating the equipment in the normal manner, following the recommended operating procedures in this manual.

Battery Safety

Danger	✧ All the battery maintenance and servicing procedures involving internal access need special tools or keys and should be carried out only by trained personnel. ✧ When connected together, the battery terminal voltage will exceed 400Vdc and is potentially lethal. ✧ Battery manufacturers supply details of the necessary precautions to be observed when working on, or in the vicinity of a large bank of battery cells. These precautions should be followed implicitly at all times. Particular attention should be paid to the recommendations concerning local environmental conditions and the provision of protective clothing, first aid and fire-fighting facilities. ✧ Ambient temperature is a major factor in determining the battery capacity and life. The nominal operating temperature of battery is 20℃. Operating above this temperature will reduce the battery life. Periodically change the battery according to the battery user manuals to ensure the back-up time of UPS. ✧ Replace the batteries only with the same type and the same number, or it may cause explosion or poor performance. ✧ When connecting the battery, follow the precautions for high-voltage operation before accepting and using the battery, check the appearance of the batteries. If the package is damaged, or the battery terminal is dirty, corroded or rusted or the shell is broken, deformed or has leakage, replace it with new product. Otherwise, battery capacity reduction, electric leakage or fire may be caused. ✧ Before operating the battery, remove the finger ring, watch, necklace, bracelet and any other metal jewelry. ✧ Wear rubber gloves. ✧ Eye protection should be worn to prevent injury from accidental electrical arcs. ✧ Only use tools (e.g. wrench) with insulated handles.

SEC.RU | Короткий путь к информации Скачано с sec.ru

	✧ The batteries are very heavy. Please handle and lift the battery with proper method to prevent any human injury or damage to the battery terminal. ✧ Don't decompose, modify or damage the battery. Otherwise, battery short circuit, leakage or even human injury may be caused. ✧ The battery contains sulfuric acid. In normal operation, all the sulfuric acid is attached to the separation board and plate in the battery. However, when the battery case is broken, the acid will leak from the battery. Therefore, be sure to wear a pair of protective glasses, rubber gloves and skirt when operating the battery. Otherwise, you may become blind if acid enters your eyes and your skin may be damaged by the acid. ✧ At the end of battery life, the battery may have internal short circuit, drain of electrolytic and erosion of positive/negative plates. If this condition continues, the battery may have temperature out of control, swell or leak. Be sure to replace the battery before these phenomena happen. ✧ If a battery leaks electrolyte, or is otherwise physically damaged, it must be replaced, stored in a container resistant to sulfuric acid and disposed of in accordance with local regulations. ✧ If electrolyte comes into contact with the skin, the affected area should be washed immediately with water.

Disposal

Warning	✧ Dispose of used battery according to the local instructions.

SEC.RU | Короткий путь к информации Скачано с sec.ru

1 UPS Structure and Introduction

1.1 UPS structure

1.1.1 UPS Configuration

The UPS configurations are provided in Table 1-1.

Table 1-1 UPS Configuration

Item	Component	Quantity/ PCS	Remark
2-slot Cabinet	Main input breaker	1	Requisite, installed in the factory
	Bypass input breaker	1	Requisite, installed in the factory
	Maintenance bypass breaker	1	Requisite, installed in the factory
	Output breaker	1	Requisite, installed in the factory
	Bypass & Monitoring unit	1	Requisite, installed in the factory
	Dust filter	1	Optional
	Power module	1-2	Requisite, installed on site
4-slot Cabinet	Manual Bypass breaker	1	Requisite, installed in the factory
	Bypass & Monitoring unit	1	Requisite, installed in the factory
	Dust filter	1	Optional
	Power module	1-4	Requisite, installed on site
6-slot Cabinet	Manual Bypass breaker	1	Requisite, installed in the factory
	Bypass & Monitoring unit	1	Requisite, installed in the factory
	Dust filter	1	Optional
	Power module	1-6	Requisite, installed on site
8-slot Cabinet	Main input breaker	1	Requisite, installed in the factory
	Bypass input breaker	1	Requisite, installed in the factory
	Maintenance bypass breaker	1	Requisite, installed in the factory
	Output breaker	1	Requisite, installed in the factory
	Bypass unit	1	Requisite, installed in the factory
	Monitoring unit	1	Requisite, installed in the factory
	Dust filter	1	Optional
	Power module	8	Requisite, installed on site
10-slot Cabinet	Main input breaker	1	Requisite, installed in the factory
	Bypass input breaker	1	Requisite, installed in the factory
	Maintenance bypass breaker	1	Requisite, installed in the factory
	Output breaker	1	Requisite, installed in the factory
	Bypass unit	1	Requisite, installed in the factory
	Morning unit	1	Requisite, installed in the factory
	Dust filter	1	Optional
	Power module	1-10	Requisite, installed on site

SEC.RU | Короткий путь к информации Скачано с sec.ru

1.1.2 UPS Outlook

The UPS outlooks are shown as figure 1-1.

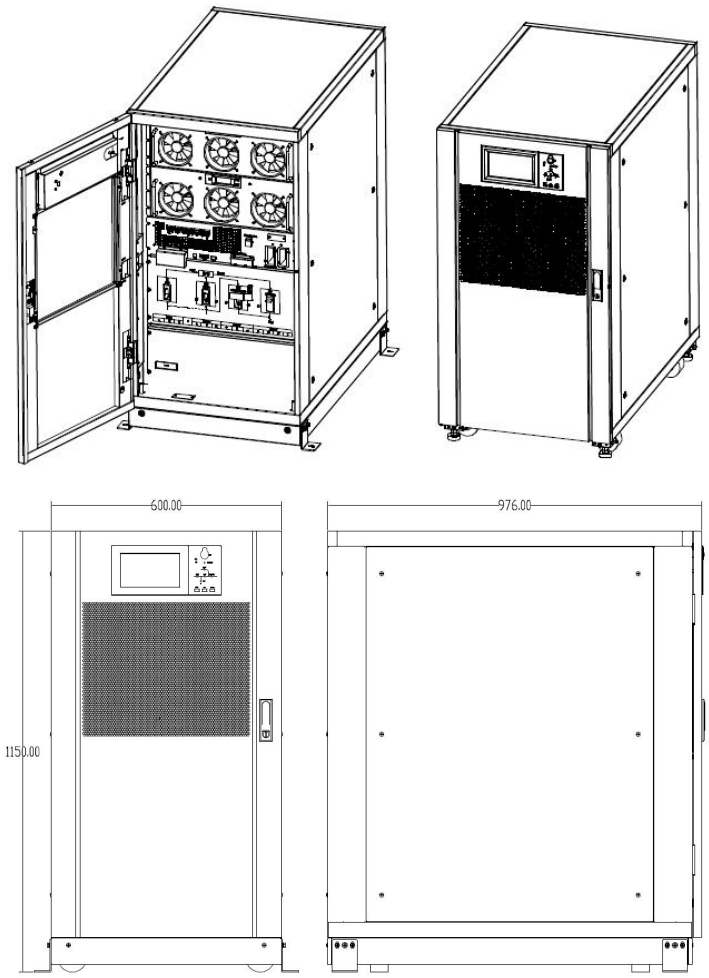

(a) The outlook of 2-slot cabinet

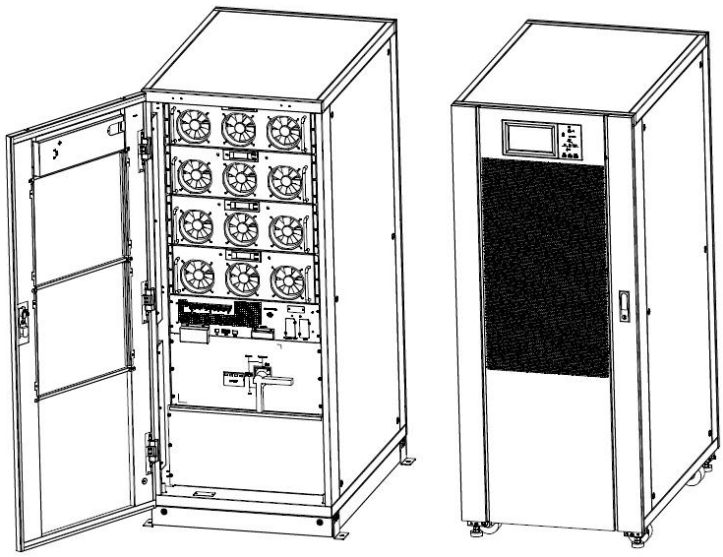

SEC.RU | Короткий путь к информации Скачано с sec.ru

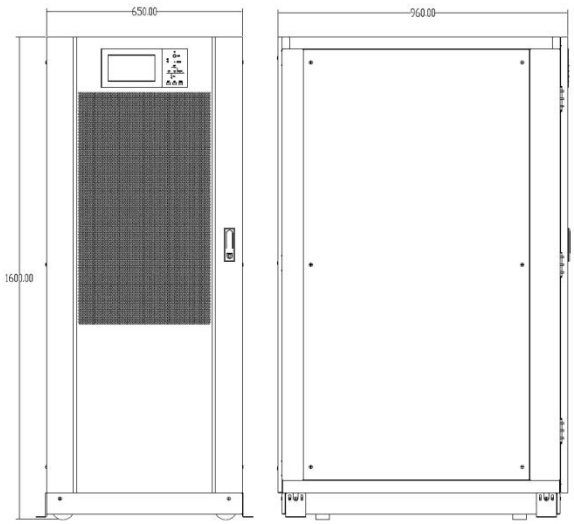

(b) The outlook of 4-slot cabinet

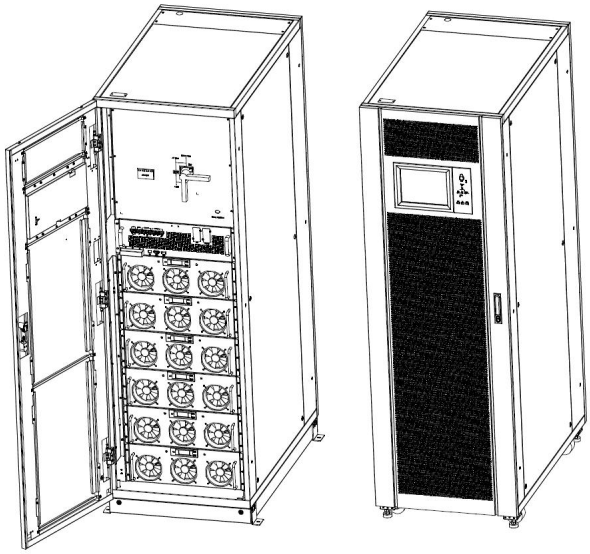

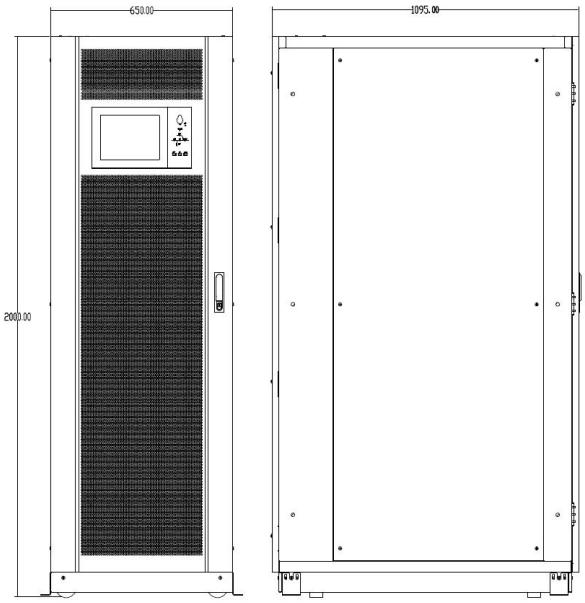

(c) The outlook of 6-slot cabinet

SEC.RU | Короткий путь к информации
Скачано с sec.ru

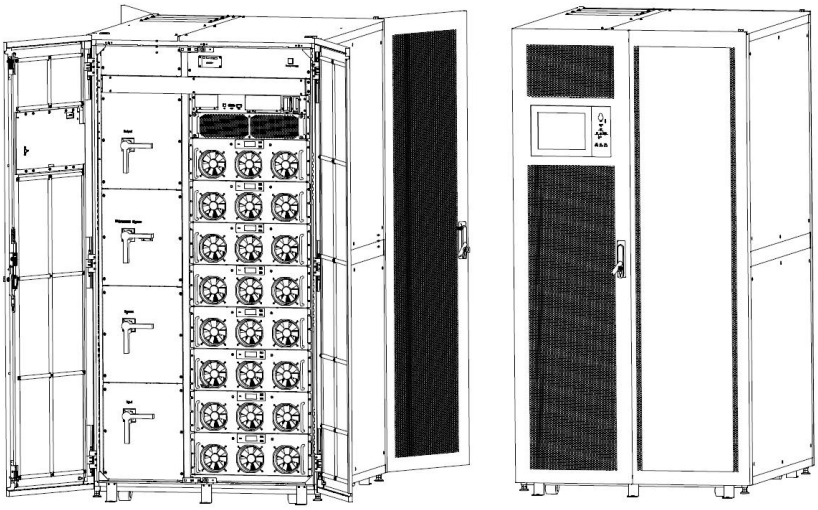

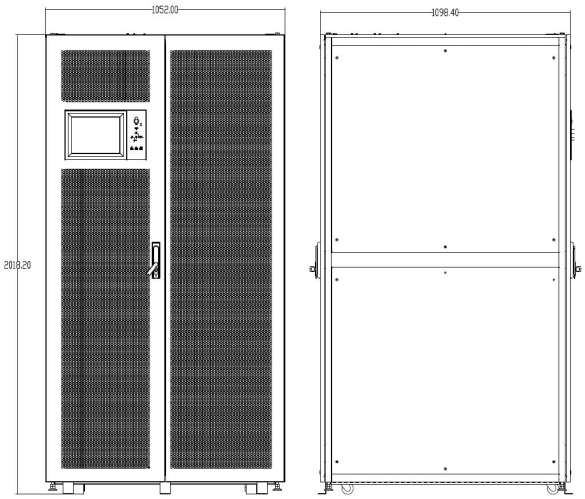

(d) The outlook of 8-slot cabinet

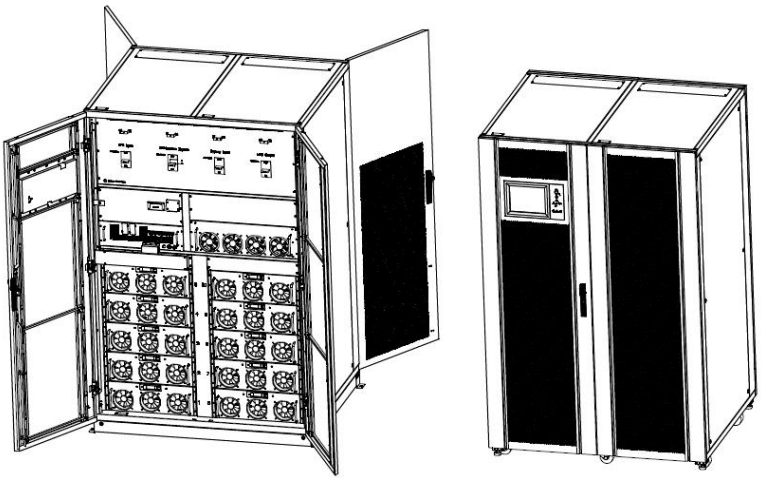

SEC.RU | Короткий путь к информации
Скачано с sec.ru

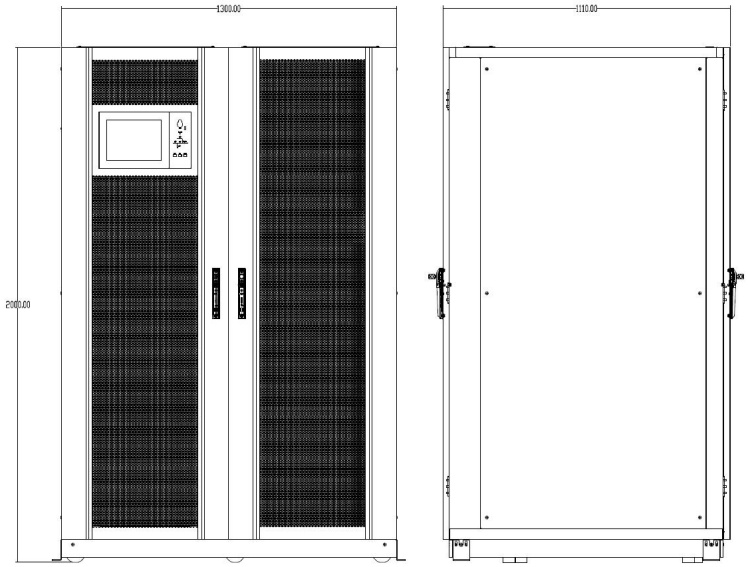

(e) The outlook of 10-slot cabinet

Figure 1.1 UPS Outlook

1.1.3 Details of UPS view

The details of UPS views are shown as figure 1-2.

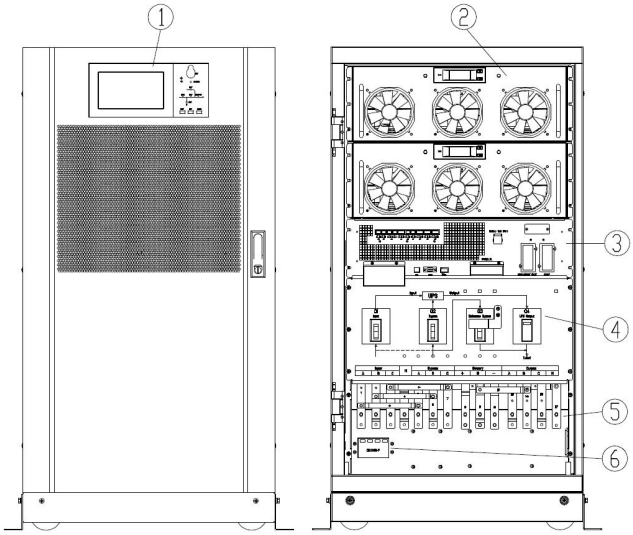

① Panel with color screen; ② Power module; ③ Bypass & monitoring unit (no hot-swappable function); ④ Breakers (input/bypass input/maintenance bypass/output); ⑤ Connection terminals; ⑥ SPD (optional)

(a) The details of 2-slot cabinet UPS

SEC.RU | Короткий путь к информации Скачано с sec.ru

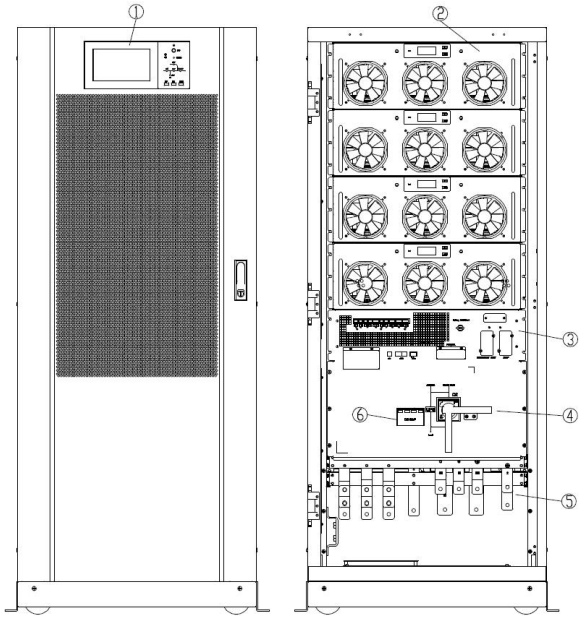

① Panel with color screen; ② Power module; ③ Bypass & monitoring unit (no hot-swappable function); ④ Breakers (input/bypass input/maintenance bypass/output); ⑤ Connection terminals; ⑥ SPD (optional)

(b) The details of 4-slot cabinet UPS

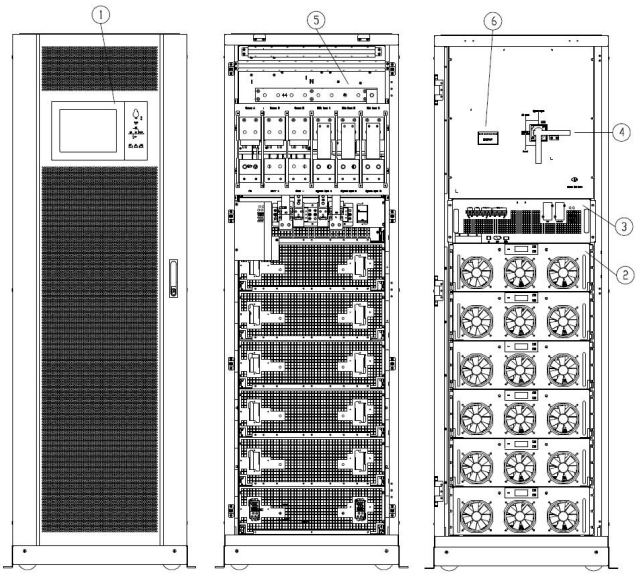

① Panel with color screen; ② Power module; ③ Bypass & monitoring module ; ④ Manual bypass breaker; ⑤ Connection terminals; ⑥ SPD (optional)

(c) The details of 6-slot cabinet UPS

SEC.RU | Короткий путь к информации Скачано с sec.ru

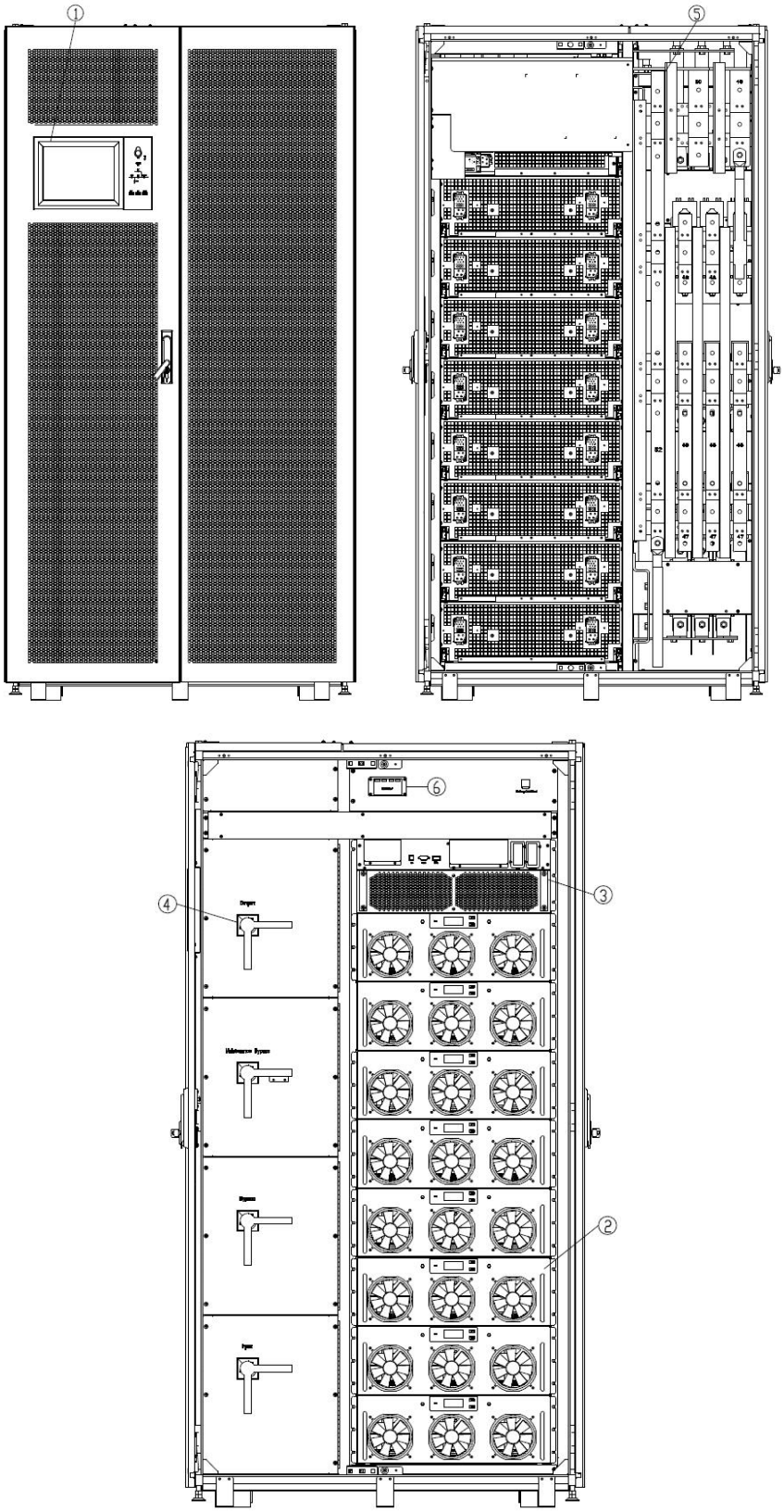

① Panel with color screen; ② Power module; ③ Bypass & monitoring module ; ④ Manual bypass breaker; ⑤ Connection terminals; ⑥ SPD (optional)

(d) The details of 8-slot Cabinet UPS

SEC.RU | Короткий путь к информации Скачано с sec.ru

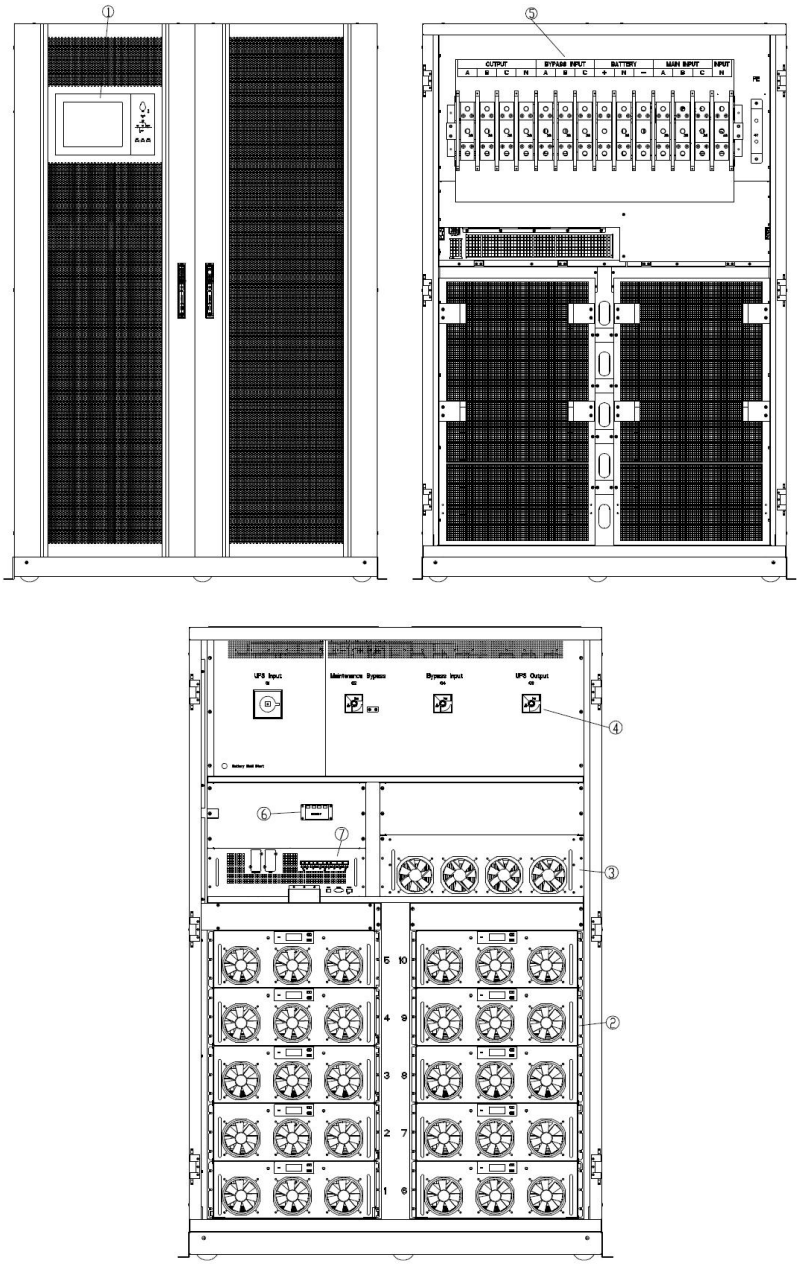

① Panel with color screen; ② Power module; ③ Bypass module ; ④ Manual bypass breaker; ⑤ Connection terminals; ⑥ SPD (optional); ⑦ Monitoring module

(e) The details of 10-slot cabinet UPS

Figure 1-2 Details of UPS view

1.2 Product Introduction

1.2.1 UPS System Description

The modular UPS is configured by the following parts: power modules, the centralized static bypass unit, the monitoring unit, module, and the cabinet with circuit switches. One or several battery strings should be installed to provide backup energy once the utility fails. The UPS

SEC.RU | Короткий путь к информации Скачано с sec.ru

structures are shown in Figure 1-3.

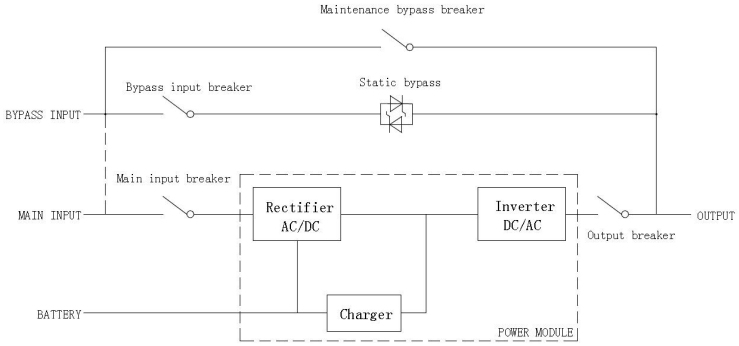

(a) 2-slot 8-slot and 10-slot UPS Block Diagram

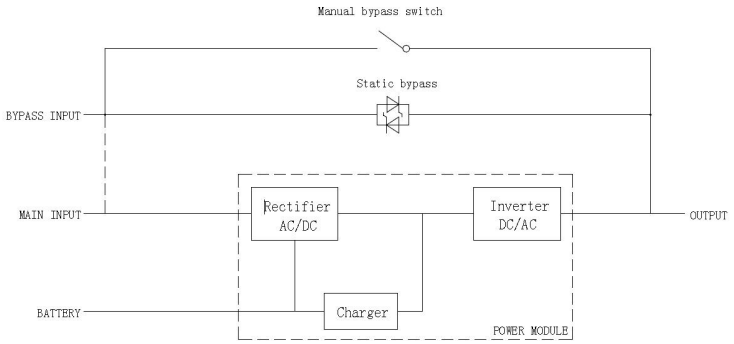

(b) 4-slot and 6-slot UPS Block Diagram

Note: The 4-slot or 6-slot UPS has only one manual bypass switch and for 6-slot UPS, the single input is standard, if the dual inputs, please confirm in advance.

Figure 1-3 UPS Block Diagram

1.2.2 Power Module Description

The power module structure is shown as Figure 1-4.The power module contains a rectifier, an inverter, and one DC charger.

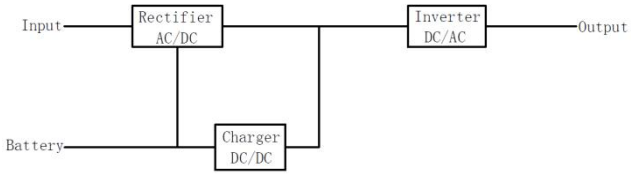

Figure 1-4 Power Module Block Diagram

1.2.3 Operation Mode

The modular UPS is an on-line, double-conversion UPS that permits operation in the following modes:

- Normal mode
- Battery mode
- Bypass mode

SEC.RU | Короткий путь к информации Скачано с sec.ru

- Maintenance mode(manual bypass)
- ECO mode
- Frequency Converter mode

1.2.3.1 Normal Mode

The inverters of power modules continuously supply AC power to the critical AC load. The rectifier derives power from the AC mains input source and supplies DC power to the inverter, meanwhile the charger derives the DC power from the rectifier and charger its associated backup batteries.

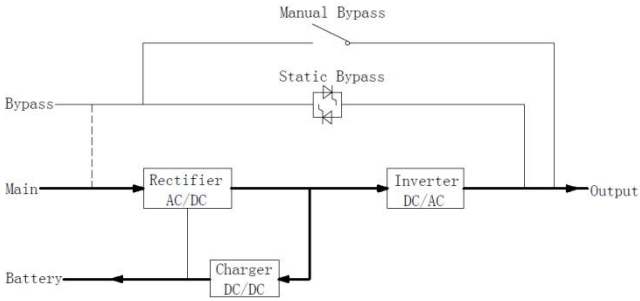

Figure 1-5 Normal mode operation diagram

1.2.3.2 Battery Mode

Upon failure of the AC mains input power, the inverters of power modules will obtain power from the batteries, and supply AC power to the critical AC load. There is no interruption to the critical load. After restoration of the AC mains input power, UPS will transfer automatically to normal mode without users' intervention.

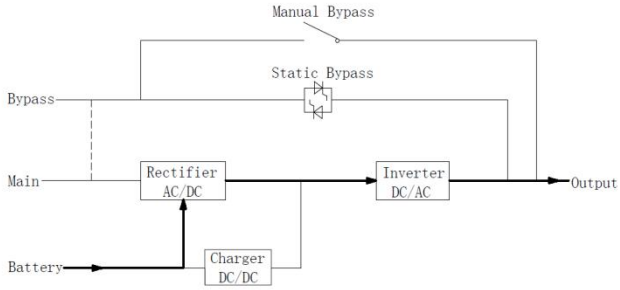

Figure 1-6 Battery Mode operation diagram

Note: With the function of "Battery Cold Start", the UPS could start without utility. For 2-slot and 4-slot cabinet UPS, "Battery Cold Start" is optional, and for 6-slot, 8-slot and 10-slot cabinet UPS, it's standard.

1.2.3.3 Bypass Mode

If the inverter overload capacity is exceeded under normal mode, or if the inverter becomes unavailable for any reason, the static switch will perform a transfer of the load from the inverter to

SEC.RU | Короткий путь к информации Скачано с sec.ru

the bypass source, without interruption to critical AC load. If the inverter is asynchronous with the bypass source, an interruption would exist in the transfer from the inverter to the bypass. This is to avoid large cross current due to the paralleling of unsynchronized AC sources. This interruption is programmable, but the typically setting is less than 3/4 of an electrical cycle, e.g. less than 15ms (50HZ) or less than 12.5ms (60HZ). The action of transfer/re-transfer can be done by the command through the monitor screen.

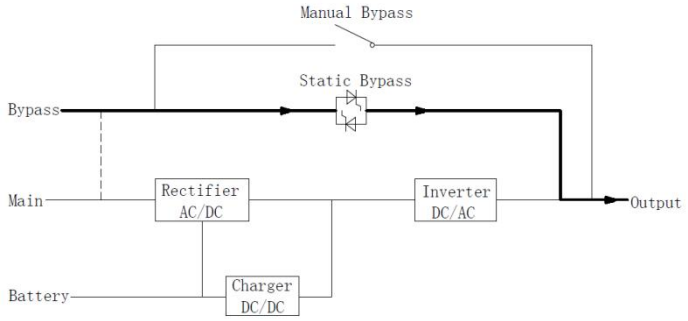

Figure 1-7 Bypass mode operation diagram

1.2.3.4 Maintenance Mode (Manual Bypass)

A manual bypass switch is available to ensure continuity of supply to the critical load when the UPS becomes unavailable e.g. during a maintenance procedure.

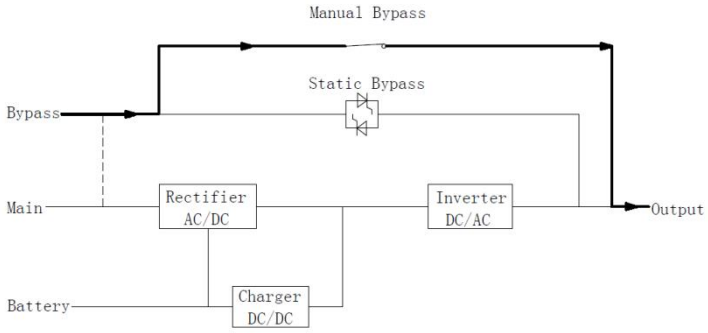

Figure 1-8 Maintenance mode operation diagram

Danger

During Maintenance mode, dangerous voltages are present on the terminal of input, output and neutral, even with all the modules and the LCD turned off.

1.2.3.5 ECO Mode

To improve system efficiency, UPS system works in Bypass Mode at normal time, and the inverter is standby, when the utility from the bypass fails, the UPS will transfer to Battery Mode and the inverter powers the load.

SEC.RU | Короткий путь к информации Скачано с sec.ru

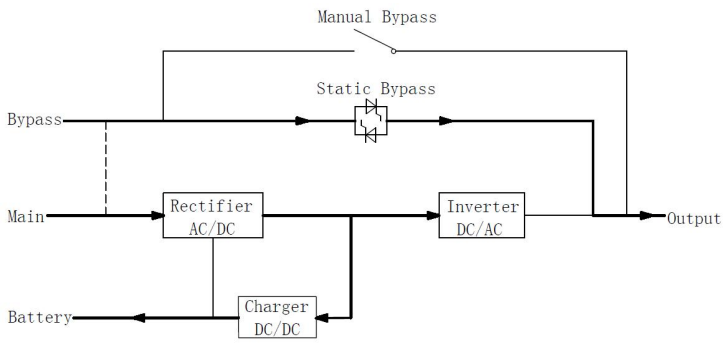

Figure 1-9 ECO Mode operation diagram

Note

There is a short interruption time (less than 10ms) when transferring from ECO mode to battery mode, it must be sure that the interruption has no effect on loads.

1.2.3.6 Frequency Converter Mode

By setting the UPS to “Frequency Converter Mode”, the UPS could present a stable output of fixed frequency (50 or 60HZ), and the bypass static switch is not available.

SEC.RU | Короткий путь к информации Скачано с sec.ru

2 Installation

2.1 Location

As each site has itself requirements, the installation instructions in this section are as a guide for the general procedures and practices that should be observed by the installing engineer.

2.1.1 Installation Environment

The UPS is intended for indoor installation and uses forced convection cooling by internal fans. Please make sure there is enough space for the UPS ventilation and cooling.
Keep the UPS far away from water, heat and inflammable and explosive corrosive material. Avoid installing the UPS in the environment with direct sunlight, dust, volatile gases, corrosive material and high salinity.
Avoid installing the UPS in the environment with conductive dirt.
The operating environment temperature for batteries is 20℃-25℃. Operating above 25℃ will reduce the battery life, and operation below 20℃ will reduce the battery capacity.
The battery will generate a little amount of hydrogen and oxygen at the end of charging; ensure the fresh air volume of the battery installation environment must meet EN50272-2001 requirements.
When external batteries are used, the battery circuit breakers (or fuses) must be mounted as close as possible to the batteries, and the connecting cables should be as short as possible.

2.1.2 Site Selection

Ensure the ground or installation platform can bear the weight of the UPS cabinet, batteries and battery racks.
No vibration and less than 5 degree inclination horizontally.
The equipment should be stored in a room so as to protect it against excessive humidity and heat sources.
The battery needs to be stored in dry and cool place with good ventilation. The most suitable storage temperature is 20℃ to 25℃.

2.1.3 Size and Weight

Ensure there is enough space for the placement of the UPS. The room reserved for the UPS cabinet is shown in Figure 2-1.

SEC.RU | Короткий путь к информации Скачано с sec.ru

Attention

Ensure the following space margin: at least 0.8m before the front door of the cabinet, so as to easily maintain the power module with the front door fully open; at least 0.5m at behind the cabinet for ventilation and cooling; at least 0.5mm distance from the top of the cabinet. The space reserved for the cabinet is shown in Figure 2-1.

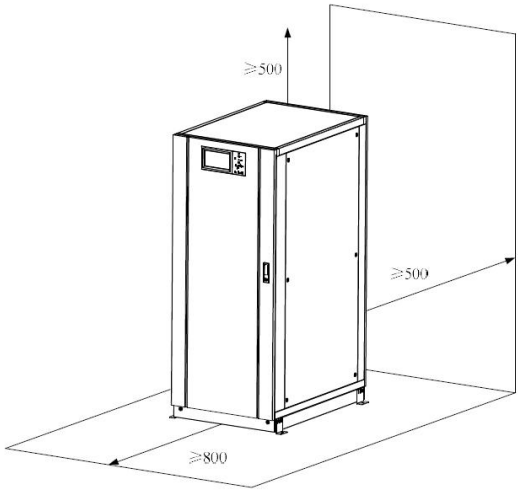

Figure 2-1 Space reserved for the cabinet (Unit: mm)

The dimension and weigh for the UPS cabinet is shown in Table 2-1

Table 2-1 Dimension and Weigh for the cabinet

Configuration	Dimension(W×D×H)	Weight(Kg)
2-slot Cabinet (with bypass unit)	600×980×1150	120
4-slot Cabinet (with bypass unit)	650×960×1600	170
6-slot Cabinet (with bypass module)	650×1095×2000	220
8-slot Cabinet (with bypass module)	1050×1100×2000	335
10-slot Cabinet (with bypass module)	1300×1100×2000	450
Power module	510×700×178	45

2.2 Unloading and Unpacking

2.2.1 Moving and Unpacking of the Cabinet

The steps to move and unpack the cabinet are as follows:

1) Check if any damages to the packing. (If any, please contact the carrier)

2) Transport the equipment to the designated site by forklift, as shown in Figure 2-2.

SEC.RU | Короткий путь к информации Скачано с sec.ru

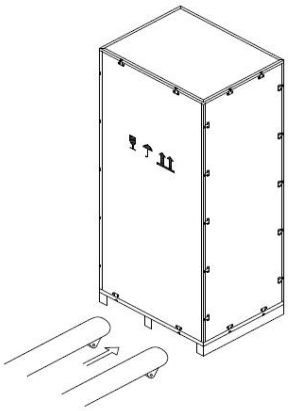

Figure 2-2 Transport to the designated site

3) Open the top plate of the steel-edged wooden case with the awl and the hammer, followed by side boards (see Figure 2-3).

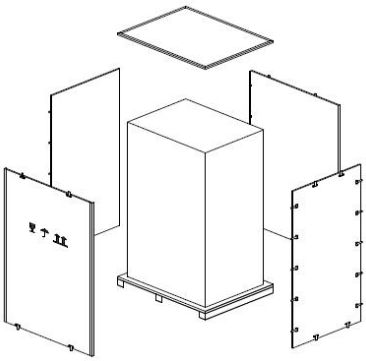

Figure 2-3 disassemble the case

4) Remove the protective foam around the cabinet.

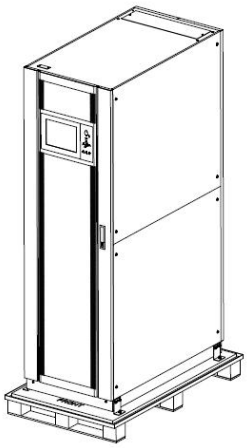

Figure 2-4 remove the protective foam

5) Check the UPS, visually examine if there are any damages to UPS during transportation. If any damages, please contact the carrier. Check the UPS with the list of the goods. If any items are not included in the list, please contact our company or the local office.

6) Dismantle the bolts that connect the cabinet and wooden pallet after disassembly.

7) Move the cabinet to the installation position.

SEC.RU | Короткий путь к информации Скачано с sec.ru

Attention

Be careful while removing to avoid scratching the equipment.

2.2.2 Unpacking Power Modules

The steps to move and unpack the power module are as follows:

1) The packing case must be placed on the platform smoothly, as is shown in Figure 2-5.

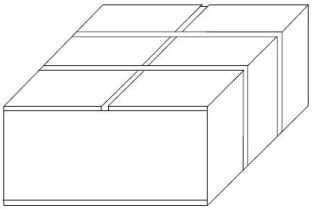

Figure 2-5 Place on platform smoothly

2) Cut the plastic packing belt and scotch tape to open the carton, as is shown in Figure 2-6.

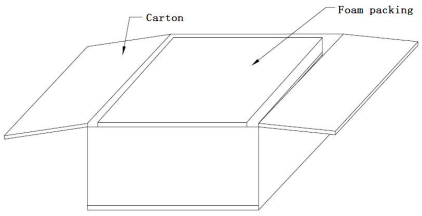

Figure 2-6 open the carton

3) Remove the foam cover, as is shown in Figure 2-7.

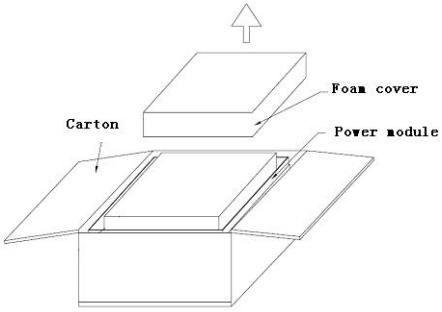

Figure 2-7 remove the foam cover

4) Take out the UPS with plastic package and dismantle the packing materials.

Attention

The waste materials of unpacking should be disposed to meet the demand for environmental

SEC.RU | Короткий путь к информации Скачано с sec.ru

protection.

2.3 Positioning

2.3.1 Positioning Cabinet

The UPS cabinet has two way of supporting itself: One is to support itself temporarily by the four wheels at the bottom， making it convenient to adjust the position of the cabinet； The other is by anchor bolts to support the cabinet permanently after adjusting the position of the cabinet. The supporting structure is shown in Figure 2-8.

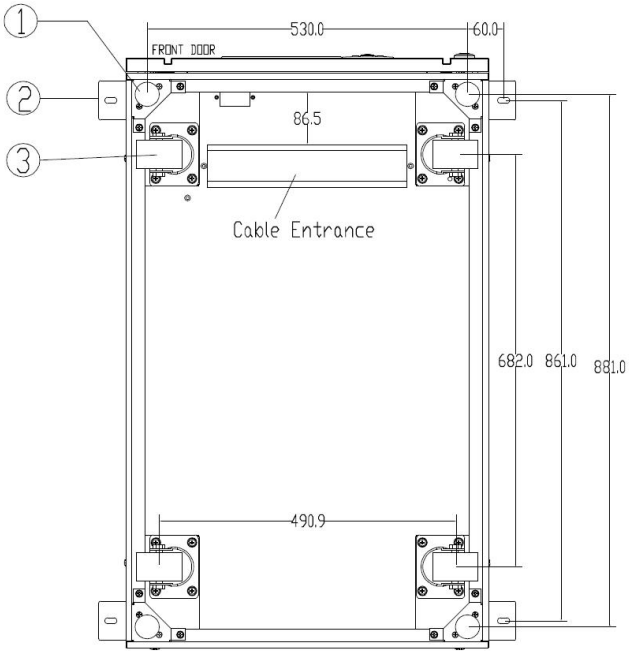

(a) 2-slot cabinet UPS (Bottom View, unit: mm)

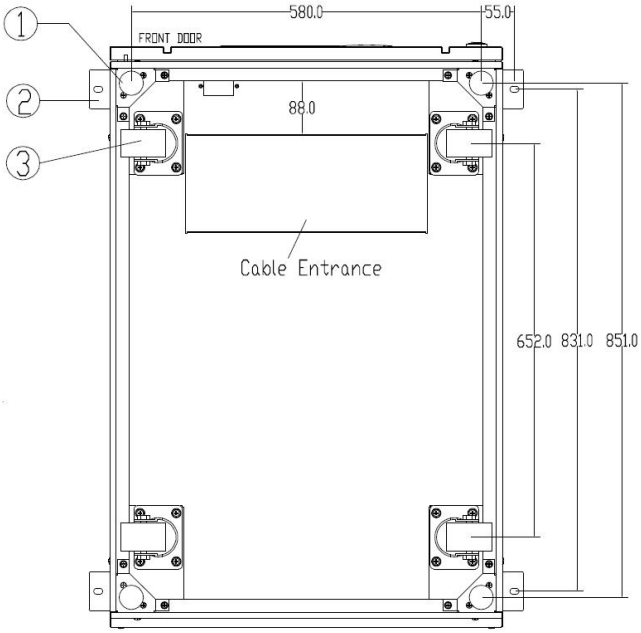

SEC.RU | Короткий путь к информации Скачано с sec.ru

(b) 4-slot cabinet UPS (Bottom View, unit: mm)

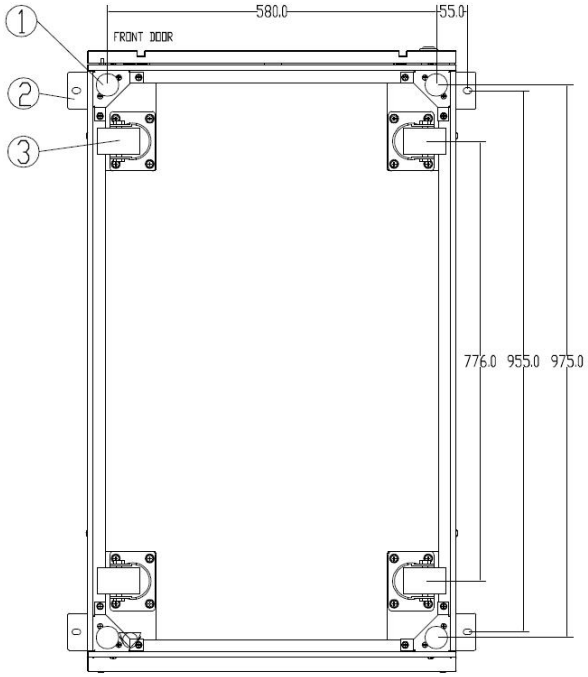

(c) 6-slot cabinet UPS (Bottom View, unit: mm)

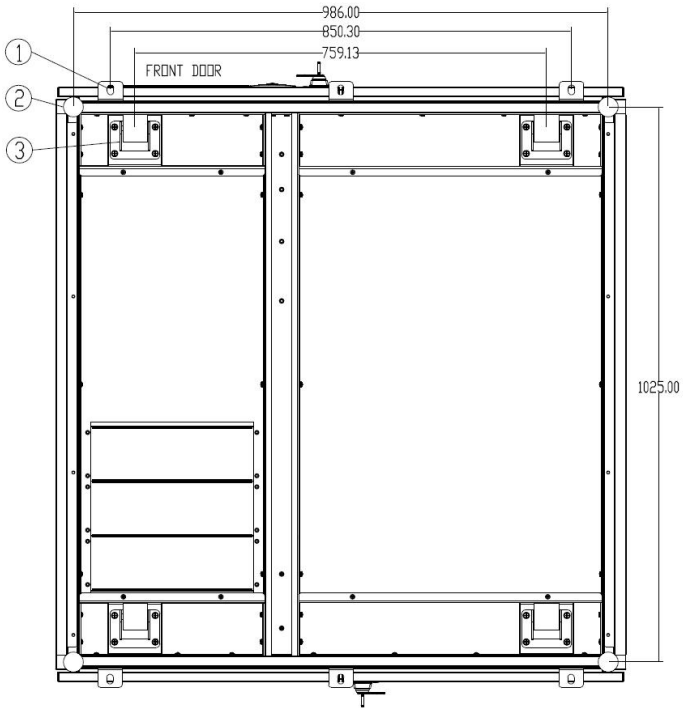

(d) 400kVA UPS (Bottom View, unit: mm)

SEC.RU | Короткий путь к информации
Скачано с sec.ru

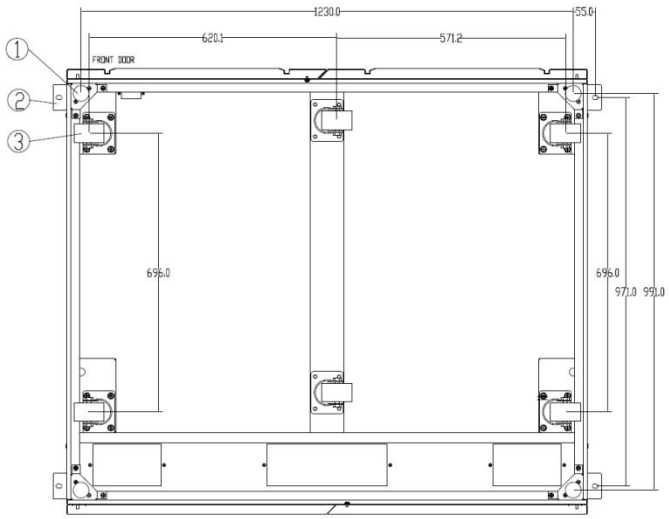

(e) 10-slot cabinet UPS (Bottom View, unit: mm)

①Adjustable anchor bolt ② L-shape corner fittings ③ supporting wheels

Figure 2-8 Supporting structure (Bottom View)

The steps of position the cabinet are as follows:

1) Ensure the supporting structure is in good condition and the mounting floor is smooth and strong.

2) Retract the anchor bolts by turning them counterclockwise with the wrench, the cabinet is then supported by the four wheels.

3) Adjust the cabinet to the right position by the supporting wheels.

4) Put down the anchor bolts by turning them clockwise with the wrench, the cabinet is then supported by the four anchor bolts.

5) Ensure the four anchor bolts are in the same height and the cabinet is fixed and immovable.

Attention

Auxiliary equipment is needed when the mounting floor is not solid enough to support the cabinet, which helps distribute the weight over a larger area. For instance, cover the floor with iron plate or increase the supporting area of the anchor bolts.

2.3.2 Installing Power Module

The installation position of power module is shown in Figure 2-9. Please install the power modules from bottom to top to prevent inclination of the cabinet due to high center of gravity. The steps of installing power module are as follows (take the 6-slot cabinet as example):

1) Ensure the cabinet is fixed and no damage to the body and inserting ports of the power module.

2) Hold the handler and the body of the power module by two persons at each side.

3) Insert the module in the installation position, and push it into the cabinet smoothly.

4) Fix the module to the cabinet through the mounting holes on two sides of the front plate of the

SEC.RU | Короткий путь к информации Скачано с sec.ru

module, as is shown in Figure 2-9.

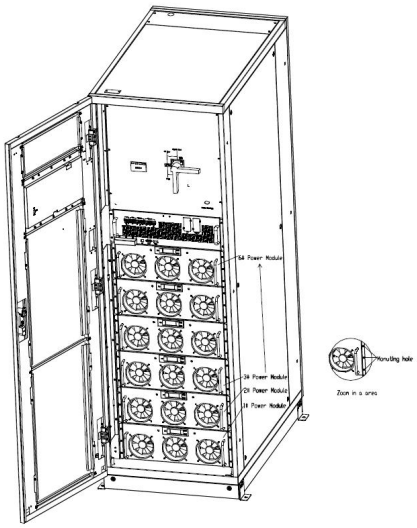

Figure 2-9 Installing power modules

Attention

- Do not place the module upside down the floor and do not let the connectors touch the floor.
- All installations work for the power module should be done by 2 persons together, because of its heavy weight.

2.4 Battery

Three terminals (positive, neutral, negative) are drawn from the battery group and connected to UPS system. The neutral line is draw from the middle of the batteries in series (See Figure 2-13)

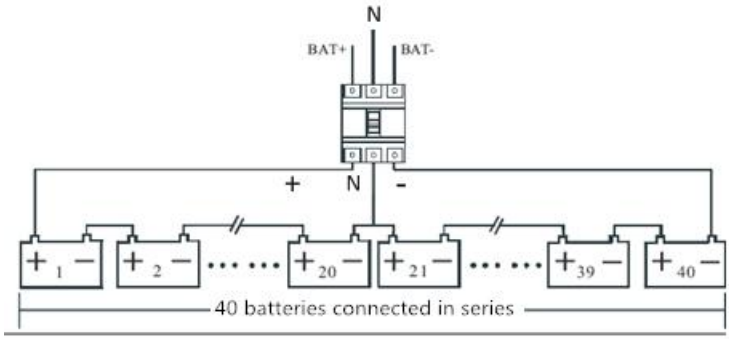

Figure 2-10 Battery string wiring diagram

Danger

SEC.RU | Короткий путь к информации Скачано с sec.ru

The battery terminal voltage is of more than 400Vdc, please follow the safety instructions to avoid electric shock hazard.

Ensure the positive, negative, neutral electrode is correctly connected from the battery unit terminals to the breaker and from the breaker to the UPS system.

2.5 Cable Entry

For the 2-slot and the 4-slot cabinets, only the bottom cable entry is available.
For the 6-slot cabinet, only the top cable entry is available.
For the 10-slot cabinet, both bottom and top cable entry are available.
The cable entry is shown in Figure 2-11 to Figure 2-16.

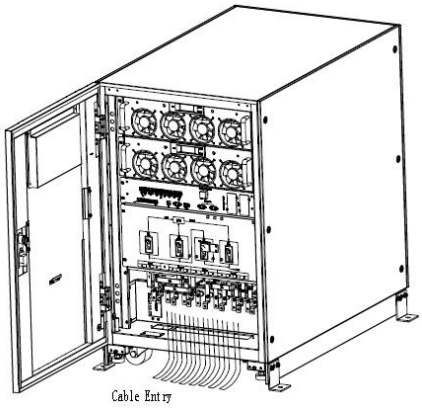

Figure 2-11 Cable Entry for 2-slot and 4-slot cabinets

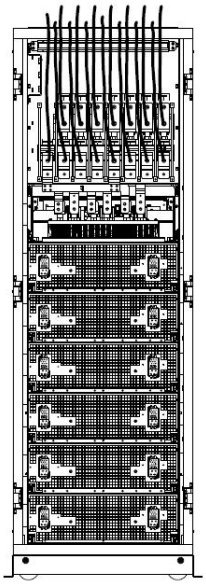

Figure 2-12 Cable Entry for 6-slot cabinet

SEC.RU | Короткий путь к информации Скачано с sec.ru

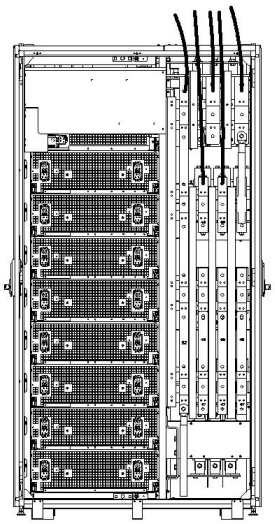

Figure 2-13 Cable Entry for 8-slot cabinet (Top Entry)

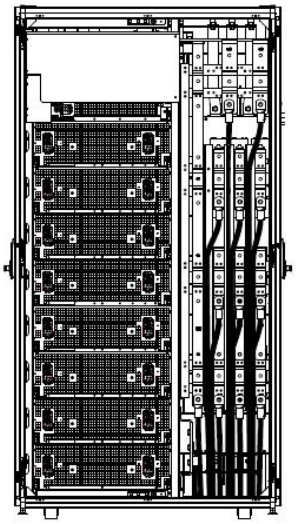

Figure 2-14 Cable Entry for 8-slot cabinet (Bottom Entry)

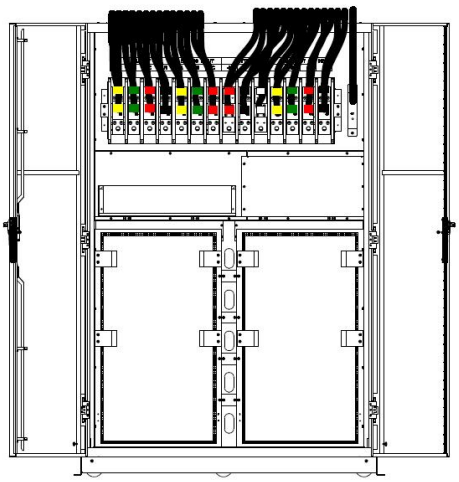

Figure 2-15 Cable Entry for 10-slot cabinet (Top Entry)

SEC.RU | Короткий путь к информации Скачано с sec.ru

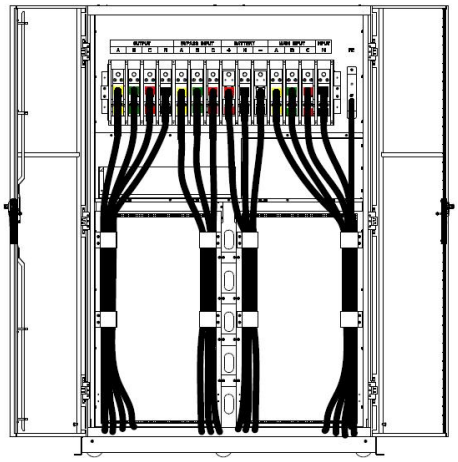

Figure 2-16 Cable Entry for 10-slot cabinet (Bottom Entry)

2.6 Power Cables

2.6.1 Specifications

The UPS power cables are recommended in Table 2-2.

Table 2-2 Recommended sizes for power cables

Contents			80/40	100/50	160/40	200/50	240/40	300/50	400/50	500/50
Main Input	Main Input		141	176	282	352	423	525	704	880
	CableSection (mm²)	A	50	50	95	150	185	2*150	2*150	2*240
		B	50	50	95	150	185	2*150	2*150	2*240
		C	50	50	95	150	185	2*150	2*150	2*240
		N	50	50	95	150	185	2*150	2*150	2*240
Main Output	Main Output		121	152	242	303	363	455	606	758
	CableSection (mm²)	A	35	50	70	120	185	2*150	2*150	2*185
		B	35	50	70	120	185	2*150	2*150	2*185
		C	35	50	70	120	185	2*150	2*150	2*185
		N	35	50	70	120	185	2*150	2*150	2*185
Bypass Input	Bypass Input		121	152	242	303	363	455	606	758
	CableSection (mm²)	A	35	50	70	120	185	2*150	2*150	2*185
		B	35	50	70	120	185	2*150	2*150	2*185
		C	35	50	70	120	185	2*150	2*150	2*185
		N	35	50	70	120	185	2*150	2*150	2*185
Battery Input	Battery Input		163	204	326	408	489	611	815	1019
	CableSection (mm²)	+	50	70	120	185	240	2*185	2*185	2*240
		-	50	70	120	185	240	2*185	2*185	2*240
		N	50	70	120	185	240	2*185	2*185	2*240
PE	CableSection (mm²)	PE	35	50	120	120	185	2*150	2*150	2*185

Note

SEC.RU | Короткий путь к информации Скачано с sec.ru

The recommended cable section for power cables are only for the situations described below:

- Ambient temperature: +30℃.
- AC loss is less than 3%, DC loss is less than 1%, the length of the AC power cables should be no longer than 50 meters and the length of the DC power cables should be no longer than 30 meters.
- Currents listed in the table are based on the 380V system (line to line voltage). For 400V system, the current is 0.95 times and for the 415V system the current is 0.92 times.
- The size of neutral lines should be 1.5-1.7 times the value listed above when the predominant load is non-linear.

2.6.2 Specifications for Power Cables Terminal

Specifications for power cables connector are listed as Table 2-3.

Table 2-3 Requirements for power terminal

Type	Port	Connection	Bolt	Torque Moment
2-slot cabinet	Mains input	Cables crimped OT terminal	M6	4.9Nm
	Bypass Input	Cables crimped OT terminal	M6	4.9Nm
	Battery Input	Cables crimped OT terminal	M8	13Nm
	Output	Cables crimped OT terminal	M6	4.9Nm
	PE	Cables crimped OT terminal	M6	4.9Nm
4-slot cabinet	Mains input	Cables crimped OT terminal	M10	15Nm
	Bypass Input	Cables crimped OT terminal	M10	15Nm
	Battery Input	Cables crimped OT terminal	M10	15Nm
	Output	Cables crimped OT terminal	M10	15Nm
	PE	Cables crimped OT terminal	M10	15Nm
6-slot and 8-slot cabinet	Mains input	Cables crimped OT terminal	M12	28Nm
	Bypass Input	Cables crimped OT terminal	M12	28Nm
	Battery Input	Cables crimped OT terminal	M12	28Nm
	Output	Cables crimped OT terminal	M12	28Nm
	PE	Cables crimped OT terminal	M12	28Nm
10-slot cabinet	Mains input	Cables crimped OT terminal	M16	96Nm
	Bypass Input	Cables crimped OT terminal	M16	96Nm
	Battery Input	Cables crimped OT terminal	M16	96Nm
	Output	Cables crimped OT terminal	M16	96Nm
	PE	Cables crimped OT terminal	M16	96Nm

SEC.RU | Короткий путь к информации Скачано с sec.ru

2.6.3 Circuit Breaker

The external circuit breakers (CB) for the system are recommended in Table 2-4.

Table 2-4 Recommended CB

Installed position	80/40	100/50	160/40	200/50
Main input CB	160A/3P	250A/3P	320A/3P	400A/3P
Bypass input CB	160A/3P	250A/3P	320A/3P	400A/3P
Output CB	160A/3P	250A/3P	320A/3P	400A/3P
Manual Bypass CB	160A/3P	250A/3P	320A/3P	400A/3P
Battery CB	225A, 250Vdc	250A, 250Vdc	400A, 250Vdc	630A, 250Vdc
Installed position	**240/40**	**300/50**	**400/50**	**500/50**
Main input CB	630A/3P	630A/3P	6300A/3P	1000A/3P
Bypass input CB	630A/3P	630A/3P	6300A/3P	1000A/3P
Output CB	630A/3P	630A/3P	630A/3P	1000A/3P
Manual Bypass CB	630A/3P	630A/3P	800A/3P	1000A/3P
Battery CB	800A/3P 250Vdc	1000A/3P 250Vdc	800A, 250Vdc	1250A, 250Vdc

Attention

The CB with RCD (Residual Current Device) is not suggested for the system.

2.6.4 Connecting Power Cables

The steps of connecting power cables are as follows:

1) Verify that all the external input distribution switches of the UPS are completely open and the UPS internal maintenance bypass switch is open, Attach necessary warning signs to these switches to prevent unauthorized operation.

2) Open the door of the cabinet (the front door for 2-slot and 4-slot cabinet UPS; the back door for 6-slot, 8-slot and 10-slot cabinet UPS), remove the metal or plastic cover. The input and output terminal, battery terminal and protective earth terminal are shown in Figure 2-17 to Figure 2-21.

SEC.RU | Короткий путь к информации Скачано с sec.ru

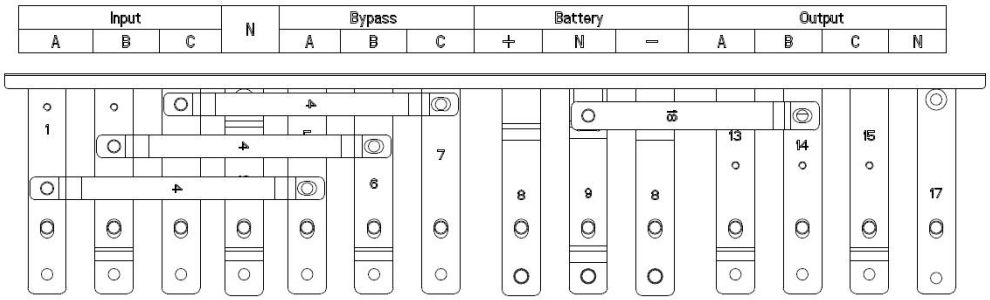

Figure 2-17 2-slot cabinet UPS connection terminals

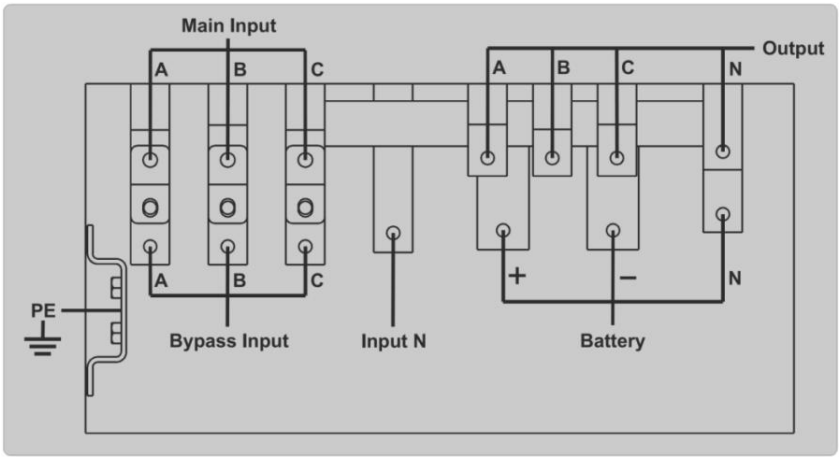

Figure 2-18 4-slot cabinet UPS connection terminals

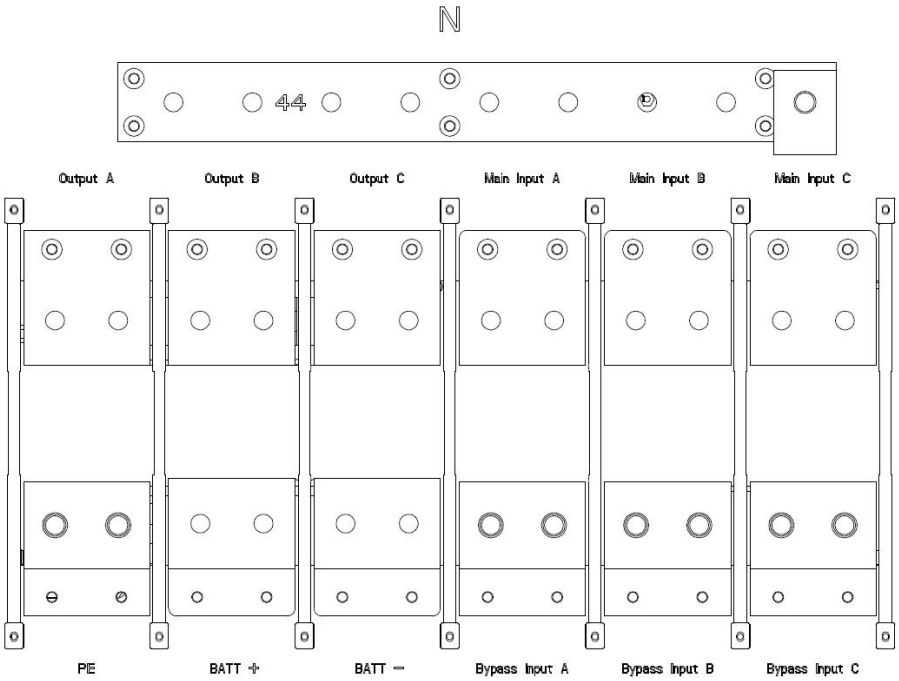

Figure 2-19 6-slot cabinet UPS connection terminals
(Single input is standard, separate bypass is optional)

SEC.RU | Короткий путь к информации
Скачано с sec.ru

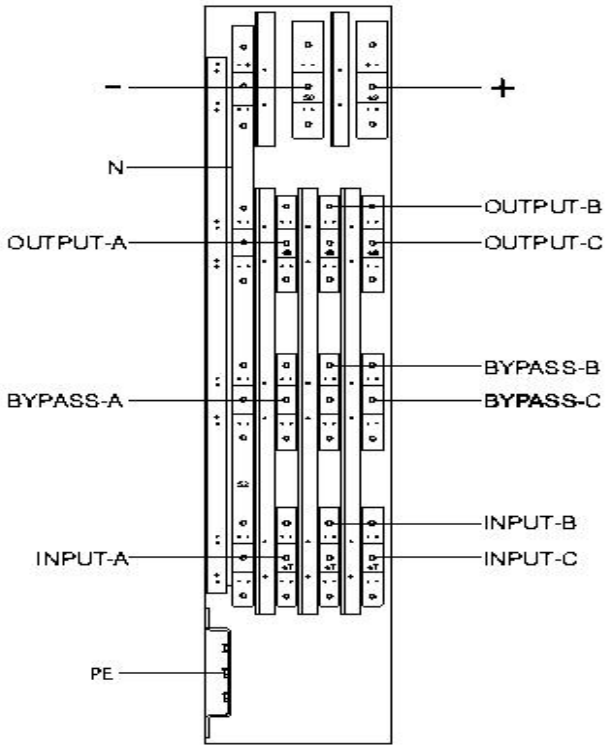

Figure 2-20 10-slot cabinet UPS connection terminals

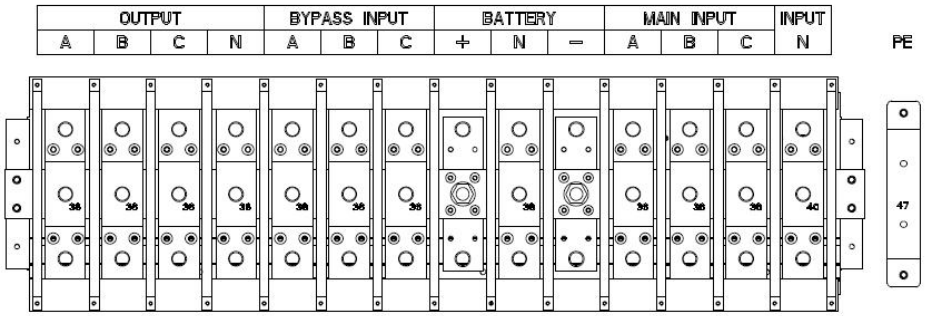

Figure 2-21 10-slot cabinet UPS connection terminals

3) Connect the protective earth wire to protective earth terminal (PE).

4) Connect the AC input supply cables to the main input terminal and AC output supply cables to the output terminal.

5) Connect the battery cables to the battery terminal.

6) Check to ensure there is no mistake and re-install all the protective covers.

Attention

The operations described in this section must be performed by authorized electricians or qualified technical personnel. If you have any difficulty, please contact the manufacturer or the agency.

SEC.RU | Короткий путь к информации Скачано с sec.ru

Warning

- Tighten the connections terminals to enough torque moment, refer to Table 2-3 and please ensure correct phase rotation.
- Before connection，ensure the input switch and the power supply are off，attach warnings label to warn not to operate by others
- The grounding cable and neutral cable must be connected in accordance with local and national codes.

2.7 Control and Communication Cables

The front panel of the bypass module provides dry contact interface (J2-J11) and communication interface (RS232, RS485, SNMP, Intelligent card interface and USB port), as is shown in Figure 2-22.

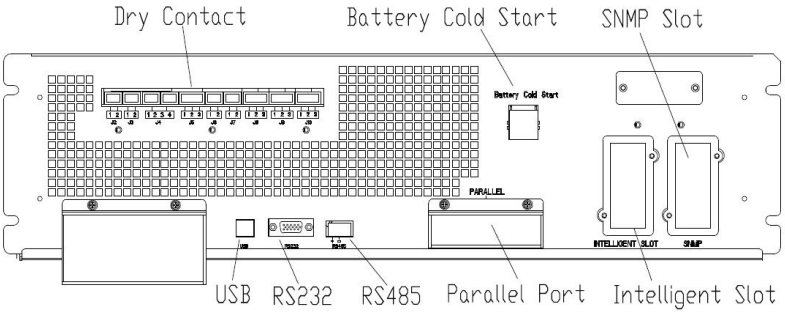

(a) Dry contact & communication interface for 2-slot /4-slot cabinet UPS

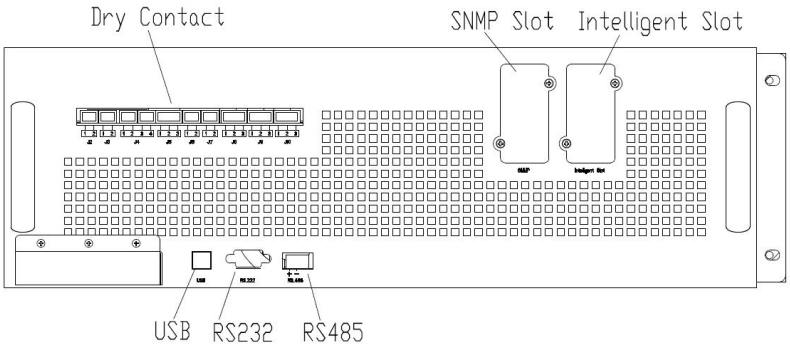

(b) Dry contact & communication interface for 6-slot cabinet

SEC.RU | Короткий путь к информации Скачано с sec.ru

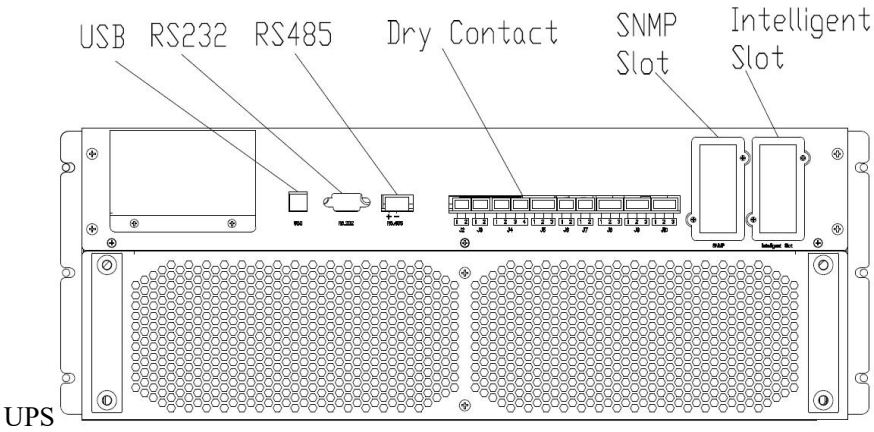

(c) Dry contact & communication interface for 8-slot cabinet UPS

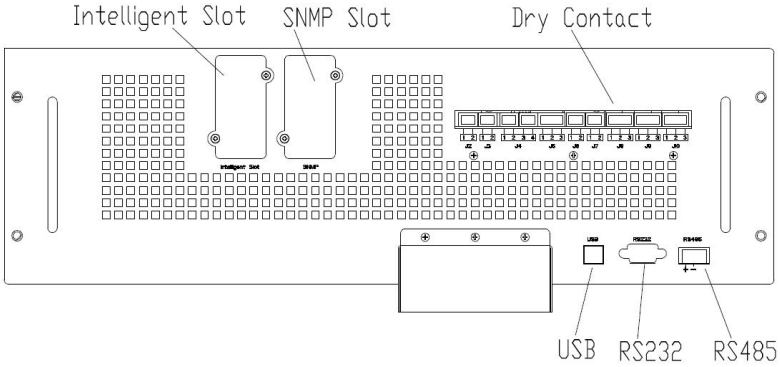

(d) Dry contact & communication interface for 10-slot cabinet UPS

Figure 2-22 Dry contact & communication interface

The UPS can accept the external dry contact signal and send out the dry contact signal, through the phoenix terminal ports. The cables connected to the dry contact terminals must be separated from power cables. Moreover, these cables should be double insulated with a typical 0.5 to 1.5mm² cross-section areas for a maximum connection length between 25 and 50meters.

2.7.1 Dry Contact Interface

The UPS provides the dry contact ports from J2 to J10, and the ports J5, J6-2, J7 can be programmable as input ports, the UPS can accept the dry contact signal from these ports to act some operations. The ports J6-1, J8, J9, and J10 can be programmable as output ports, when the UPS is in some actions, the UPS can send out the dry contact signal to external devices for indicating the status of the UPS or acting. The default definitions of these ports are shown in Table 2-5.

Table 2-5 Default Functions of the ports

Port	Name	Function
J2-1	TEMP_BAT	Detection of battery temperature
J2-2	TEMP_COM	Common terminal for temperature detection

SEC.RU | Короткий путь к информации Скачано с sec.ru

J3-1	ENV_TEMP	Detection of environmental temperature
J3-2	TEMP_COM	Common terminal for temperature detection
J4-1	REMOTE_EPO_NC	Trigger EPO when disconnected with J4-2
J4-2	+24V_DRY	+24V
J4-3	+24V_DRY	+24V
J4-4	REMOTE_EPO_NO	Trigger EPO when short- circuited with J4-3
J5-1	+24V_DRY	+24V
J5-2	GEN_CONNECTED	Input dry contact , the function is settable ,
J5-3	GND_DRY	Ground for +24V
J6-1	BCB Drive	Output dry contact, the function is settable.
J6-2	BCB_Status	Input dry contact, the function is settable.
J7-1	GND_DRY	Ground for +24V
J7-2	BCB_Online	Input dry contact, the function is settable. Default: BCB Online (when short-circuited with J7-1, it indicates BCB online, and BCB Status is available).
J8-1	BAT_LOW_ALARM_NC	Output dry contact (Normally closed), the function is settable. Default: Low battery alarm
J8-2	BAT_LOW_ALARM_NO	Output dry contact (Normally open), the function is settable.
J8-3	BAT_LOW_ALARM_GND	Common terminal for J8-1 and J8-2
J9-1	GENERAL_ALARM_NC	Output dry contact, (Normally closed) the function is settable.
J9-2	GENERAL_ALARM_NO	Output dry contact, (Normally open) the function is settable.
J9-3	GENERAL_ALARM_GND	Common terminal for J9-1 and J9-2
J10-1	UTILITY_FAIL_NC	Output dry contact, (Normally closed) the function is settable.
J10-2	UTILITY_FAIL_NO	Output dry contact, (Normally open) the function is settable.
J10-3	UTILITY_FAIL_GND	Common terminal for J10-1 and J10-2

Note

The input dry contact ports J5-2, J6-2, and J7 can be programmed through our MTR software, the programmable events are shown in Table 2-6.

Table 2-6 Input Programmable Events

NO.	Event	Description
1	Generator Input	The input power is supplied by the generator

SEC.RU | Короткий путь к информации Скачано с sec.ru

2	Maint CB Close	Maintenance breaker is closed
3	Mute	Mute
4	BCB Status	BCB status, closed or open
5	Transfer Inverter	UPS would transfer to the inverter mode
6	BCB Online	Enable the BCB status checking
7	Transfer Bypass	UPS would transfer to the bypass mode
8	Fault Clear	Recheck the fault or alarm information
9	BMS Allow Charge	Allow batteries to be charged
10	BMS Allow Discharge	Allow batteries to discharge
11	Stop Boost Charge	Stop boost charging
12	Electrolyte Leakage	Battery electrolyte leakage
13	Op CB Closed	Output circuit breaker is closed (customized)

Note: The output dry contact ports J6-1, J8, J9 and J10 can be programmed through our MTR software, the programmable events are shown in Table 2-7.

Table 2-7 Output Programmable Events

NO.	Event	Description
1	BCB Trip	BCB tripping
2	Byp Backfeed Trip	Bypass backfeed protective breaker tripping
3	Overload	Output is overload
4	General Alarm	General alarms
5	Output Lost	No output voltage
6	Batt Mode	UPS works in battery mode
7	Utility Fail	The power-grid fails
8	On Inverter	UPS works in inverter mode
9	Batt Charge	Batteries are being charged
10	Normal Mode	UPS works in normal mode
11	Batt Volt Low	Batteries voltage is low
12	On Bypass	UPS works in bypass mode
13	Batt Discharge	Batteries are discharging
14	Rectifier Ready	The rectifier is starting
15	Battery Boost Charge	Batteries are boosting charged

Note: There below take the default definitions for example to introduce the methods of application.

Interface of Battery and Environmental Temperature Detection

The input dry contact J2 and J3 can detect the temperature of batteries and environment respectively, which can be used in environment monitoring and battery temperature compensation. Interfaces diagram for J2 and J3 are shown in Figure 2-23, the description of the interface is in Table 2-8.

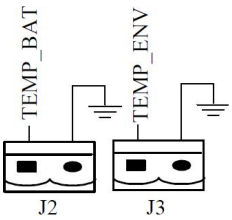

SEC.RU | Короткий путь к информации Скачано с sec.ru

Figure 2-23 J2 and J3 for temperature detecting

Table 2-8 Description of J2 and J3

Port	Name	Function
J2-1	TEMP_BAT	Detection of battery temperature
J2-2	TEMP_COM	common terminal
J3-1	ENV_TEMP	Detection of environmental temperature
J3-2	TEMP_COM	common terminal

Note

A specified temperature sensor is required for temperature detection, and it's optional, please confirm with the manufacturer or the local agency before the order.

Remote EPO Input Port

J4 is the input port for remote EPO. It requires connecting NC (J4-1) and +24V (J4-2) and disconnecting NO (J4-4) and +24V (J4-3) during normal operations, and EPO is triggered when disconnecting NC (J4-1) and +24V (J4-2), or connecting NO (J4-4) and +24V (J4-3). The port diagram is shown in Figure 2-24, and the port description is shown in Table 2-9.

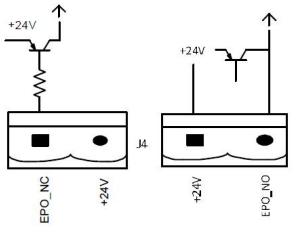

Figure 2-24 Diagram of input port for remote EPO

Table 2-9 Description of input port for remote EPO

Port	**Name**	**Function**
J4-1	REMOTE_EPO_NC	Trigger EPO when disconnect with J4-2
J4-2	+24V_DRY	+24V
J4-3	+24V_DRY	+24V
J4-4	REMOTE_EPO_NO	Trigger EPO when connect with J4-3

Note

J4-1 and J4-2 must be connected in normal operations.

Generator Input Dry Contact

The default function of J5 is the interface for generator input, when connecting J5-2 with +24V (J5-1), the UPS judges the generator has been connected in the system. The port diagram is shown in Figure 2-25, the port description is shown in Table 2-10.

SEC.RU | Короткий путь к информации Скачано с sec.ru

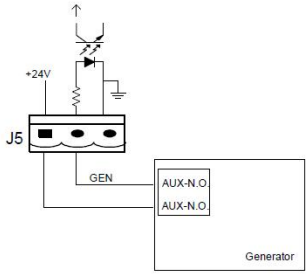

Figure 2-25 Diagram of input port for generator input

Table 2-10 Description of input port for generator input

Port	Name	Function
J5-1	+24V_DRY	+24V
J5-2	GEN_CONNECTED	Connection status of generator
J5-3	GND_DRY	Power ground for +24V

BCB Input Port

The default functions of J6 and J7 are the ports for BCB tripping and BCB status, connect J6-1 and J7-1 to BCB tripper, the port J6-1 can provide a driver signal (+24VDC, 20mA) to trip the battery breaker when EPO is triggered or EOD (end of discharge) happen. Connect J6-2 and J7-1 to BCB auxiliary contact points after shorting circuit J7-1 and J7-2, the UPS would detect the BCB status, when BCB is closed, it indicates batteries are connected, when open, it alarms batteries not connected. The port diagram is shown in Figure 2-26, and the description is shown in Table 2-11.

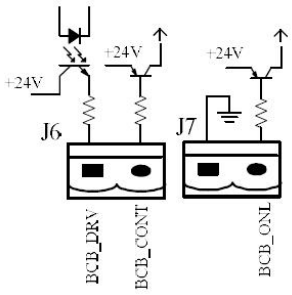

Figure 2-26 BCB Port

Table 2-11 Description of BCB port

Port	Name	Function
J6-1	BCB_DRIV	BCB contact drive, provides +24V voltage，20mA drive signal
J6-2	BCB_Status	BCB contact status, connect with the normally open signal of BCB
J7-1	GND_DRY	Power ground for +24V
J7-2	BCB_Online	BCB on-line input (normally open) , BCB is on-line when the signal is connecting with J7-1

Note

In default setting, when a circuit breaker with auxiliary contacts is used, connect J6-2 and J7-1 to

SEC.RU | Короткий путь к информации Скачано с sec.ru

auxiliary contacts terminals to get the status of the BCB, this function must be enabled by shorting J7-1 and J7-2.

Battery Warning Output Dry Contact Interface

The default function of J8 is the output dry contact interface for battery voltage low alarm, when the battery voltage is lower than the setting value, an auxiliary dry contact signal will be activated via the relay, before UPS alarms “Battery voltage low”, J8-1 and J8-3 are connected by the relay, J8-2 and J8-3 are disconnected, when UPS alarms “battery voltage low”, J8-1 and J8-3 are disconnected by the relay, J8-2 and J8-3 are connected.
The port diagram is shown in Figure 2-27, and the description is shown in Table 2-12.

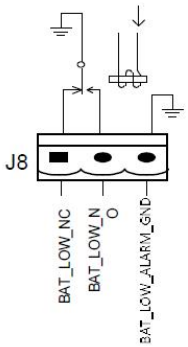

Figure 2-27 Battery warning output dry contact interface diagram

Table 2-12 Battery warning output dry contact interface description

Port	Name	Function
J8-1	BAT_LOW_ALARM_NC	Battery warning relay (normally closed) will be open during warning
J8-2	BAT_LOW_ALARM_NO	Battery warning relay (normally open) will be closed during warning
J8-3	BAT_LOW_ALARM_GND	Common terminal

General Alarm Output Dry Contact Interface

The default function of J9 is the general alarm output dry contact dry interface. When one and more warnings are trigged, an auxiliary dry contact signal will be active via the isolation of a relay. The port diagram is shown in Figure 2-28, and the description is shown in Table 2-13.

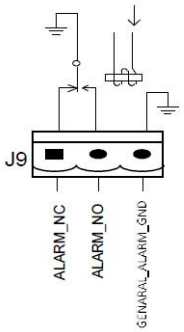

Figure 2-28 General alarm dry contact interface diagram

SEC.RU | Короткий путь к информации Скачано с sec.ru

Table 2-13 General alarm dry contact interface description

Port	Name	Function
J9-1	GENERAL_ALARM_NC	Integrated warning relay (normally closed) will be open during warning
J9-2	GENERAL_ALARM_NO	Integrated warning relay (normally open) will be closed during warning
J9-3	GENERAL_ALARM_GND	Common terminal

Utility Fail Warning Output Dry Contact Interface

The default function of J10 is the output dry contact interface for utility failure warning, when the utility fails, the system will send a utility failure warning information, and provide an auxiliary dry contact signal via the isolation of a relay. The interface diagram is shown in Figure 2-29, and the description is shown in Table 2-13.

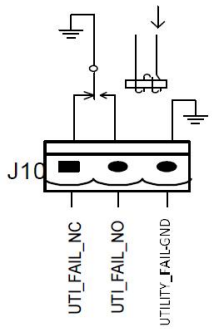

Figure 2-29 Utility failure warning dry contact interface diagram

Table 2-13 Utility failure warning dry contact interface description

Port	Name	Function
J10-1	UTILITY_FAIL_NC	Mains failure warning relay(normally closed) will be open during warning
J10-2	UTILITY_FAIL_NO	Mains failure warning relay (normally open) will be closed during warning
J10-3	UTILITY_FAIL_GND	Common terminal

2.7.2 Communication Interface

RS232, RS485 and USB ports can provide series data which can be used for commissioning and maintenance by authorized engineers or can be used for networking or integrated monitoring system in the service room. SNMP is used on site for communication (Optional).
Intelligent card interface is used for extension dry contact interface (Optional).

SEC.RU | Короткий путь к информации Скачано с sec.ru

3 UPS and Module Control Panel

3.1 LCD panel for Power Module

The structure of LCD panel for power module is shown in Figure 3-1.

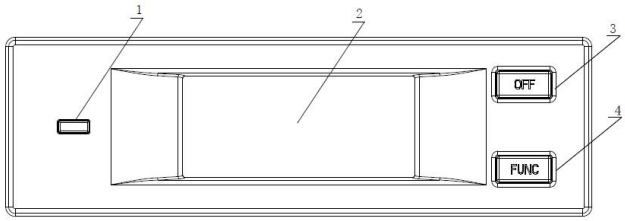

1: Status indicator 2: LCD Display

3: OFF Key 4: FUNC Key

Figure 3-1 Control and display panel for power module

The operator control panel is divided into three functional areas: Status indicator, control and operation keys and LCD display.

3.1.1 LED Indicator

The LED indicator has green and red colours to indicate the statuses and faults by combinations of different colours and the time it lasts. The combinations are listed in Table 3-1.

Table 3-1 Statues and faults of different combinations

No.	LED combinations	Description
1	Green short-time flashing 1 (Green for 1S，Off for 2S)	Rectifier soft starting
2	Green short-time flashing 2 (Green for 2S，Off for 1S)	Inverter soft starting
3	Green medium-time flashing (Green for 1S，Off for 5S)	Power module inverter standby
4	Green long-time flashing (Green for 2S，Off for 10S)	Power module in deep sleep (shutdown)
5	Steady green	UPS is working normally
6	Red and Green Alternating (Red for 1S,Green for 5S)	The load powered by inverter with warnings （No battery，battery discharging，overload
7	Steady red	Power module shutdown by fault
8	Red medium-time flashing (Red for 1S，Off for 5S)	Shutdown manually or by monitoring software
9	Red short-time flashing (Red for 1S，Off for 1S)	Situation except above

SEC.RU | Короткий путь к информации Скачано с sec.ru

3.1.2 Control and Operation Keys

The control and operation keys include FUNC keys and OFF key that have different functions:

a) The FUNC key is used for turning the display pages;

b) The OFF key is mainly for turning off the power module, as the following procedures:

1) Enable: LCD panel→Menu Operate

→Enable Module "OFF" Key

;

2) Press the "OFF" key for 3 seconds, the power module will be excluded from the system;

c) Press the "FUNC" keys to resets the LCD display.

3.1.3 LCD Display

LCD is for displaying the information for the module and its structure is shown in Figure 3-2.

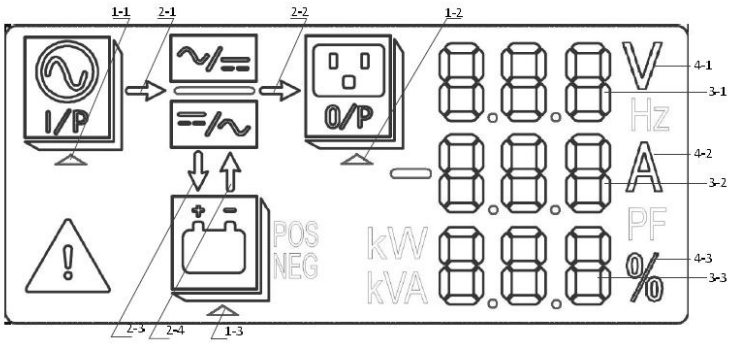

1: Select triangle 2: Energy bar

3: Digit Display Area 4: Unit

Figure 3-2 LCD display for Module

Users can browse the information of each power module by pressing the FUNC key to turn the pages.

- Select triangle of

highlighted:

  Input information is presented in the Digit Displays Area: 3-phase voltage and 3-phas current.

- Select triangle of

highlighted:

  Output information is presented in the Digit Displays Area: 3-phase voltage, 3-phase current and the 3-phase load percentage.

SEC.RU | Короткий путь к информации Скачано с sec.ru

- Select triangle of

highlighted:

  Battery information is presented in the Digit Display Area: Battery positive voltage, battery positive charging/discharging current and bus positive voltage.

- Select triangle of

highlighted:

  Battery information id presented in the Digit Displays Area: battery negative voltage, battery negative charging/discharging current and bus negative voltage.

- 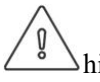
highlighted:

  Fault and warning codes are shown in Digit Displays Area in recycle (shown with short dash when less than 3). The meanings of the codes are listed in Table3-2.

-

flashing:

  Indicating a fault occurs.

- Energy bar of

:

  a) Flashing: Rectifier soft start;
  b) Highlighted: The rectifier is working normally;
  c) Off: Other situation.

- Energy bar of

:

  a) Flashing: Inverter starting;
  b) Highlighted: Load on inverter;
  c) Off: Other situation.

- Energy bar of 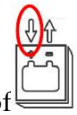
:
  a) Flashing: Low battery voltage;
  b) Highlighted: Charging normally;
  c) Off: battery not connected.

- Energy bar of 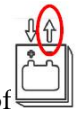
:

  a) Lightened: Discharging mode;
  b) Off: Battery not connected or charging.

Unit: Voltage (V), Current (A), Percentage (%).

When one power module is been turning pages, the other modules update within 2 seconds.

SEC.RU | Короткий путь к информации Скачано с sec.ru

Table 3-2 codes for faults and warnings

Codes	Description	Codes	Description
16	Main voltage abnormal	67	Battery polarity reversed
18	Bypass phase sequence fault	69	Inverter protected
20	Bypass voltage abnormal	71	Neutral disconnected
28	Bypass Over-track frequency	74	Module shut down manually
30	Transfer times (from inverter to	81	Battery or charger fail
32	Output shorted	83	Lost N+X redundancy
34	EOD of battery	85	EOD system inhibited
38	Battery test fail	93	Inverter IO CAN fail
41	Battery maintenance fail	95	Data CAN fail
47	Rectifier fail	97	Power share fail
49	Inverter fail	109	Inverter bridge open
51	Rectifier over temperature	111	Temperature difference
53	Fan fail	113	Input current unbalanced
55	Output overload	115	DC bus over voltage
57	Output overload time out	117	Rectifier soft start fail
59	Inverter over temperature	119	Relay open
61	UPS inverter Inhibited	121	Relay shorted
65	Low battery	127	Transfer to inverter manually

3.2 UPS operator panel

The structure of operator control and display panel for cabinet is shown in Figure 3-2.

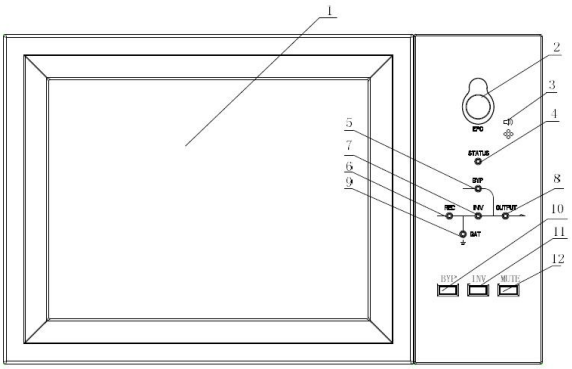

1: LCD touch screen 2: EPO switch 3: Audible Alarm (Buzzer)
4: Status indicator 5: Bypass indicator 6: Rectifier indicator
7: Inverter indicator 8: Load indicator 9: Battery indicator
10: Bypass transfer 11: Inverter transfer 12: Mute

Figure 3-3 Control and display panel for cabinet

The LCD panel for cabinet is divided into three functional areas: LED indicator, control and operation keys and LCD touch screen.

3.2.1 LED Indicator

There are 6 LEDs on the panel to indicate the operating status and fault. The description of indicators is shown in Table 3-3.

SEC.RU | Короткий путь к информации Скачано с sec.ru

Table 3-3 Status description of indicator

Indicator	State	Description
Rectifier indicator	Steady green	Rectifier normal for all modules
	Flashing green	Rectifier normal for at least one module, mains normal
	Steady red	Rectifier fault
	Flashing red	Mains abnormal for at least one module
	Off	Rectifier not operating
Battery indicator	Steady green	Battery charging
	Flashing green	Battery discharging
	Steady red	Battery abnormal (battery failure, no battery or battery reversed) or battery converter abnormal (failure, over current or over temperature) , EOD
	Flashing red	Battery low voltage
	Off	Battery and battery converter normal, battery not charging
Bypass indicator	Steady green	Load supplied by bypass
	Steady red	Bypass abnormal or out of normal range, or static bypass switch fault
	Flashing red	Bypass voltage abnormal
	Off	Bypass normal
Inverter indicator	Steady green	Load supplied by inverter
	Flashing green	Inverter on, start, synchronization or standby (ECO mode) for at least one module
	Steady red	System output not supplied by inverter, inverter fault for at least one module.
	Flashing red	System output supplied by inverter, inverter fault for at least one module.
	Off	Inverter not operating for all modules
Load indicator	Steady green	UPS output ON and normal
	Steady red	UPS overload time is out, or output short, or output no power supply
	Flashing red	Overload output of UPS
	Off	No output of UPS
Status indicator	Steady green	Normal operation
	Steady red	Failure

There are two different types of audible alarm during UPS operation, as shown in Table 3-4.

Table 3-4 Description of audible alarm

Alarm	Description
Two short alarm with a long one	when system has general alarm (for example: AC fault),

SEC.RU | Короткий путь к информации Скачано с sec.ru

Continuous alarm	When system has serious faults (for example: fuse blown or hardware failure)

3.2.2 Control and Operation Keys

Control and operation keys include four keys of 2, 10, 11, and 12, which are used together with LCD touch screen. The function description is shown in Table 3-5.

Table 3-5 Functions of control and operation keys

Function Key	Description
EPO	Long press，cut off the load power (shut down the rectifier, inverter, static bypass and battery)
BYP	Long press，transfer to the bypass (Push the button up in the back of the door to enable , see Figure 4-2)
INV	Long press, transfer to the inverter
MUTE	Long press to switch between turning off and on the buzzing

Attention

When bypass frequency is over track, there is interruption time(less than 10ms) for transferring from bypass to inverter.

3.2.3 LCD Touch Screen

User can easily browse the information, operate the UPS, and set the parameters through the LCD touch screen, which is friendly for users.

After the monitoring system starts self-test, the system enters the home page, following the welcome window. The home page is shown in Figure 3-4.

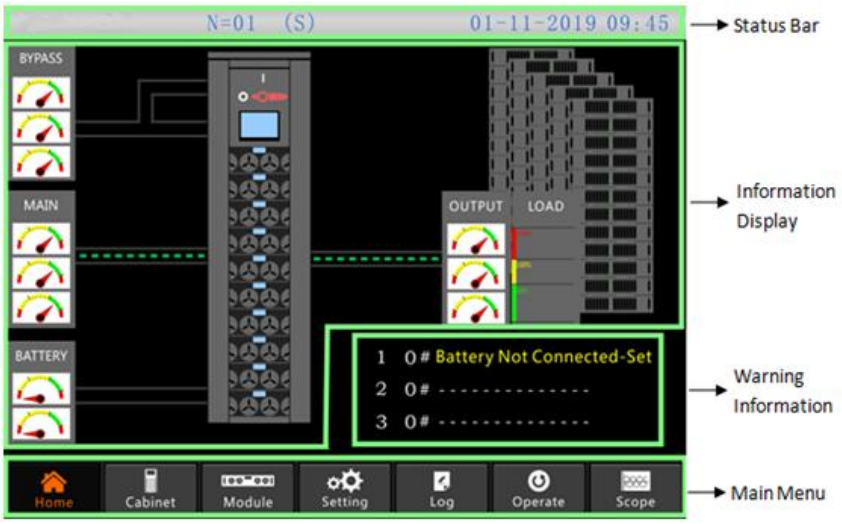

Figure 3-4 Home page

SEC.RU | Короткий путь к информации Скачано с sec.ru

Home page consists of Status bar, Information display, warning information and main menu.

- Status Bar

The status bar contains the product, capacity, operational mode, and the number of the power module and the time of the system.

- Warning Information

Display the warning information of the cabinet.

- Information Display

Users can check the information of the cabinet in this area.

The bypass voltage, main input voltage, battery voltage, and output voltages are presented in the form of gauge.

The loads are displayed in the form of bar chart in percentage. The green area stands for a load a load of less than 60%, yellow area for a load of 60%-100%, and red area for a load of more than 100%. The energy flow mimics the flow of the power.

- Main Menu

The main menu includes Cabinet, Module, Setting log, Operate and Scope. Users can operate and control the UPS, and browse all measured parameters through main menu.

The structure of the main menu tree is shown in Figure 3-5.

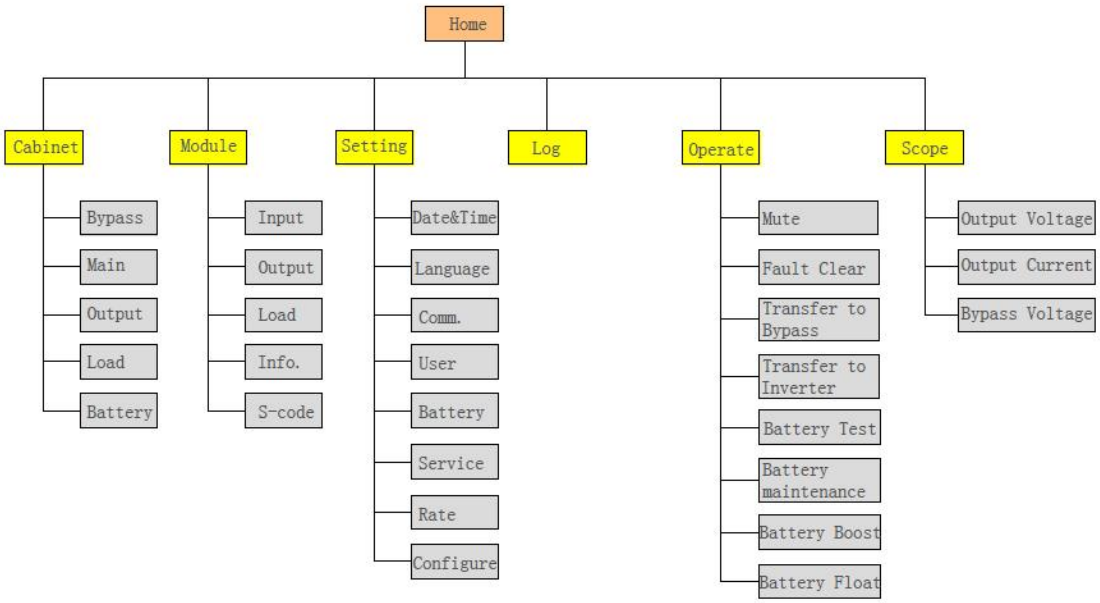

Figure 3-5 Structure of menu tree

3.3 Main menu

The main menu includes Cabinet, Module, Setting, Log, Operate and Scope, and it is described in details below.

3.3.1 Cabinet Menu

Touch the icon

(at the bottom left of the screen), and the system enters the page of the cabinet menu, as it is shown in Figure 3-6.

SEC.RU | Короткий путь к информации Скачано с sec.ru

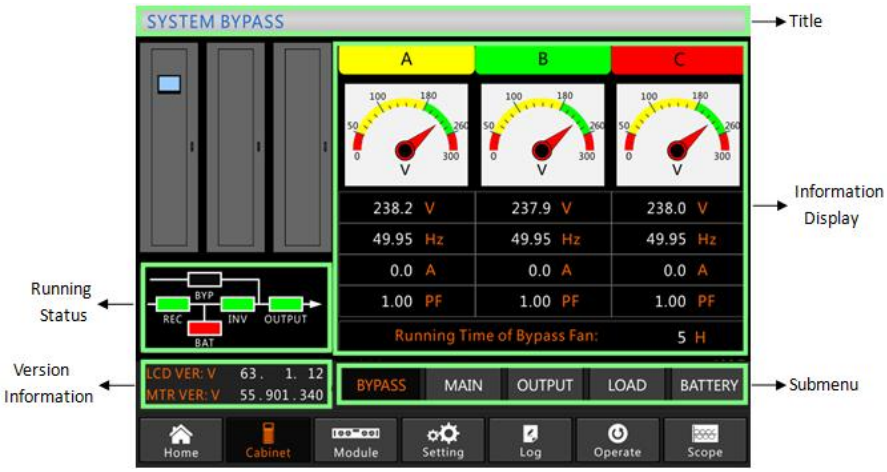

Figure 3-6 Cabinet menu

The Cabinet menu comprises sectors of title, information display and version running status, information display and submenu. The sectors are described as follows.

- **Title**

Display the information of the selected submenu.

- **Running status**

The squares shown on the mimic current represent the various UPS power paths and show the current UPS operating status. (The green square indicates the block working normally, the white indicates the absent of the block and red indicates the absence of the block or in fault).

- **Version Information**

Display the version information of LCD and monitor.

- **Submenu**

It includes the submenu of Bypass, Main, Output, load and battery.

- **Information Display**

Display information of each submenu.

The interface of each submenu is shown in Figure 3-7.

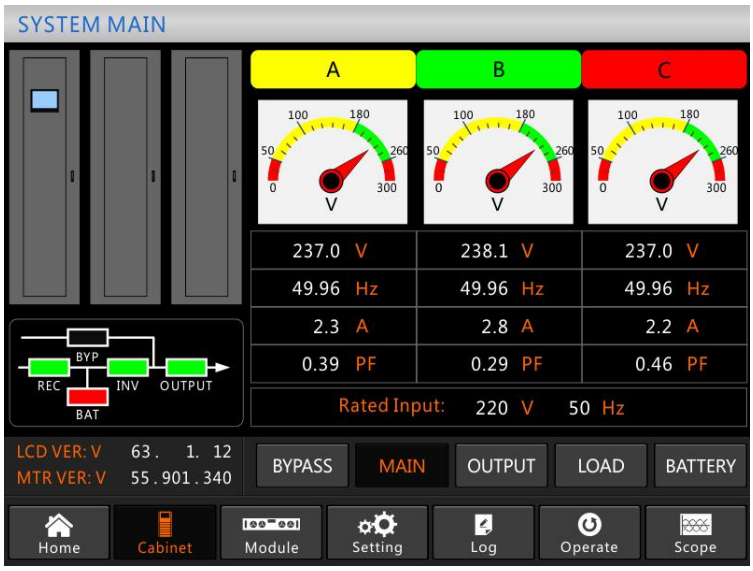

(a) Interface of Main

SEC.RU | Короткий путь к информации Скачано с sec.ru

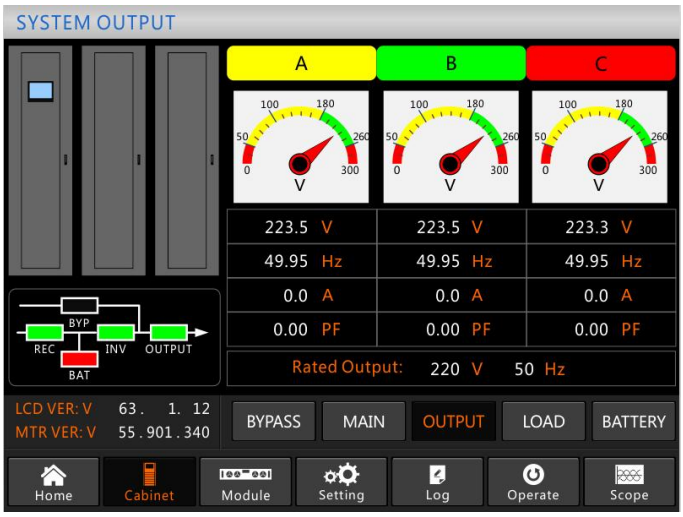

(b) Interface of Output

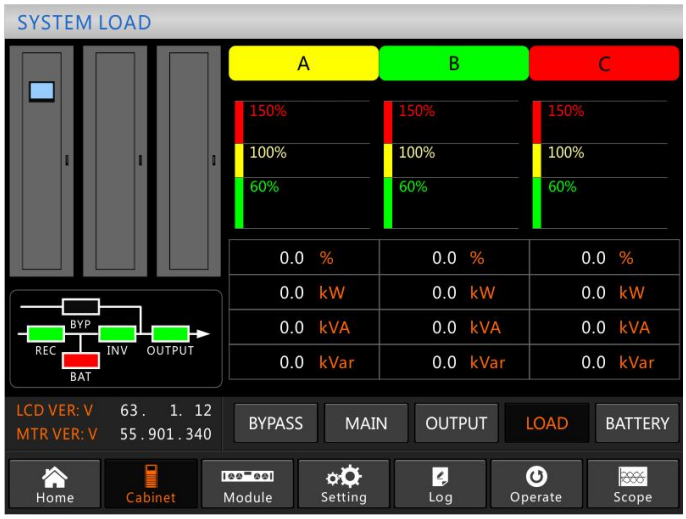

(c) Interface of Load

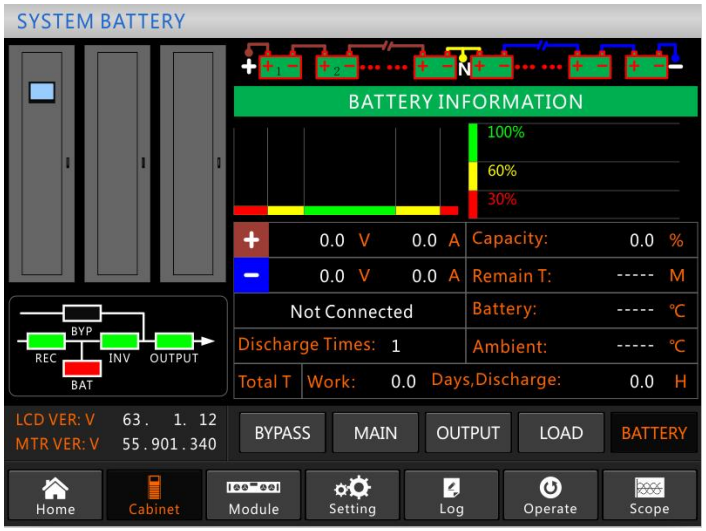

(d) Interface of Battery

Figure 3-7 Submenu interface of Cabinet

SEC.RU | Короткий путь к информации
Скачано с sec.ru

The submenu of Cabinet is described in details below in Table 3-6.

Table 3-6 Description of each submenu of Cabinet

Submenu Name	Contents	Meaning
Main	V	Phase voltage
	A	Phase current
	Hz	Input frequency
	PF	Power factor
Bypass	V	Phase voltage
	A	Phase current
	Hz	Bypass frequency
	PF	Power factor
Output	V	Phase voltage
	A	Phase current
	Hz	Output frequency
	PF	Power factor
Load	kVA	Sout: Apparent Power
	kW	Pout: Active Power
	kVar	Qout: Reactive power
	%	Load (The percentage of the UPS load)
Battery	V	Battery positive/negative Voltage
	A	Battery positive/negative Current
	Capacity (%)	The percentage compared with new battery capacity
	Remain T（Min）	Remaining battery backup time
	Battery(℃)	Battery Temp
	Ambient(℃)	Environmental Temp
	Total Work T	Total work time
	Total Discharge T	Total discharging time

3.3.2 Module menu

Touch the icon

(At the bottom left of the screen), and the system enters the page of the Module menu, as is shown in Figure 3-8.

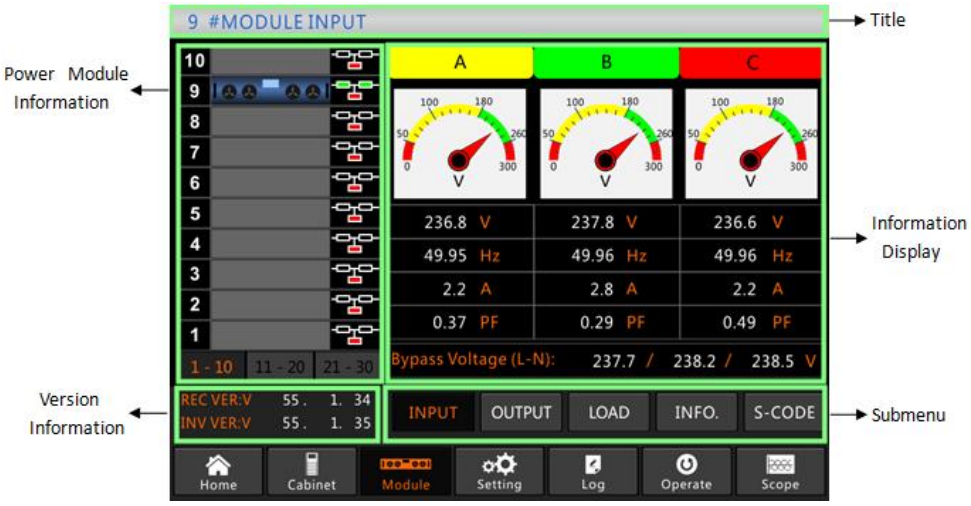

Figure 3-8 Module menu

SEC.RU | Короткий путь к информации Скачано с sec.ru

The Module comprises sectors of title, information display, power module information, version information and submenu. The sectors are described as follows.

- **Title**

Present the title of submenu of the selected power module.

- **Information display**

Display information of each submenu.

- **Power module information**

The users can choose the power module to browse the information in the “Information display” sector.

Color of the square on the mimic current path represent the various power module paths and show the current operating status.

(a) The green square indicates the module working normally;

(b) The black indicates module in invalid;

(c) The red indicates the absence of the module or in fault.

Take the 9# module 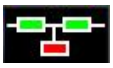 for example. It indicates that UPS is in Normal mode, and the rectifier and the inverter are working normally. The battery is not connected.

- **Version Information**

Display the version information of rectifier and inverter for the selected module.

- **Submenu**

The submenu includes Input, Output, Load, INFO and S-CODE.

Users can enter the interface of each submenu by directly touching the icon. Each interface of the submenu is shown in Figure 3-9.

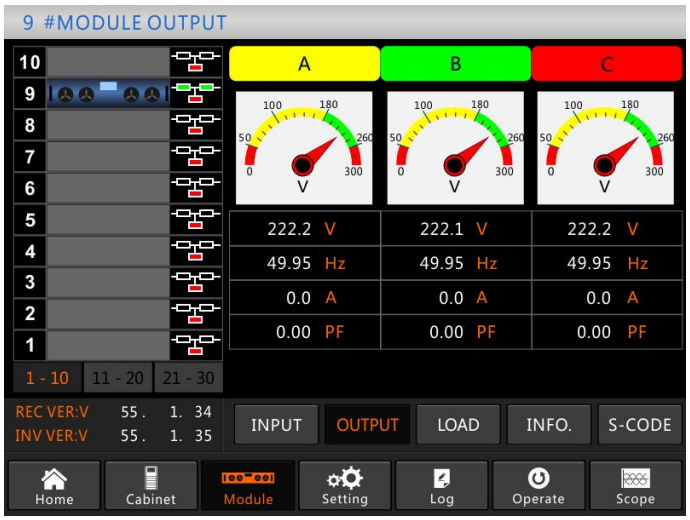

(a) Interface of Output

SEC.RU | Короткий путь к информации Скачано с sec.ru

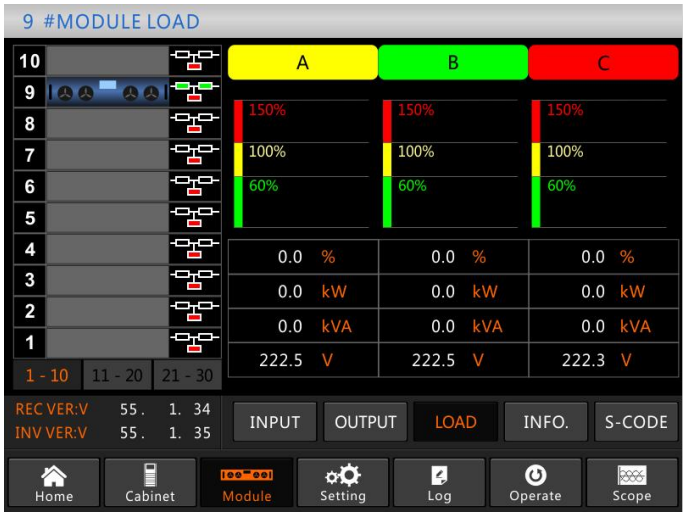

(b) Interface of Load

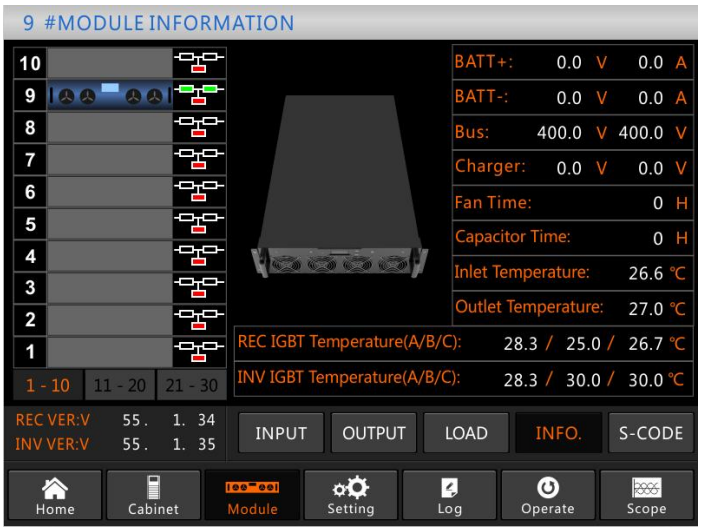

(c) Interface of Information

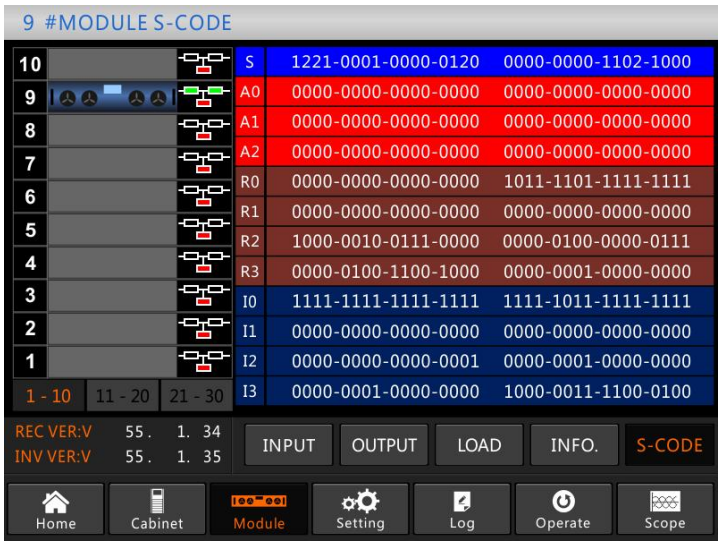

(e) Interface of S-Code

Figure 3-9 Module menu

The submenus of Module are described below in details in Table 3-7.

SEC.RU | Короткий путь к информации Скачано с sec.ru

Table 3-7 Description of each submenu of Module

Submenu Name	Contents	Meaning
Input	V	Input phase voltage of selected module
	A	Input phase current of selected module
	Hz	Input frequency of selected module
	PF	Input power factor of selected module
Output	V	Output phase voltage of selected module
	A	Output phase current of selected module
	Hz	Output frequency of selected module
	PF	Output power factor of selected module
Load	V	Load voltage of selected module
	%	Load (The percentage of the power module
	KW	Pout: Active Power
	KVA	Sout: Apparent Power
Information	BATT+(V)	Battery Voltage (positive)
	BATT-(V)	Battery Voltage (negative)
	BUS(V)	Bus Voltage(Positive & Negative)
	Charger(V)	Charger Voltage(Positive & Negative)
	Fan Time	Total Fan's Running time of the selected power
	Inlet Temperature(°C)	Inlet Temperature of the selected power module
	Outlet Temperature(°C)	Outlet Temperature of the selected power module
S-code	Fault Code	For the maintenance personnel

3.3.3 Setting

Touch the icon

(At the bottom of the screen), and the system enters the page of the Setting, as is shown in Figure 3-10.

SEC.RU | Короткий путь к информации Скачано с sec.ru

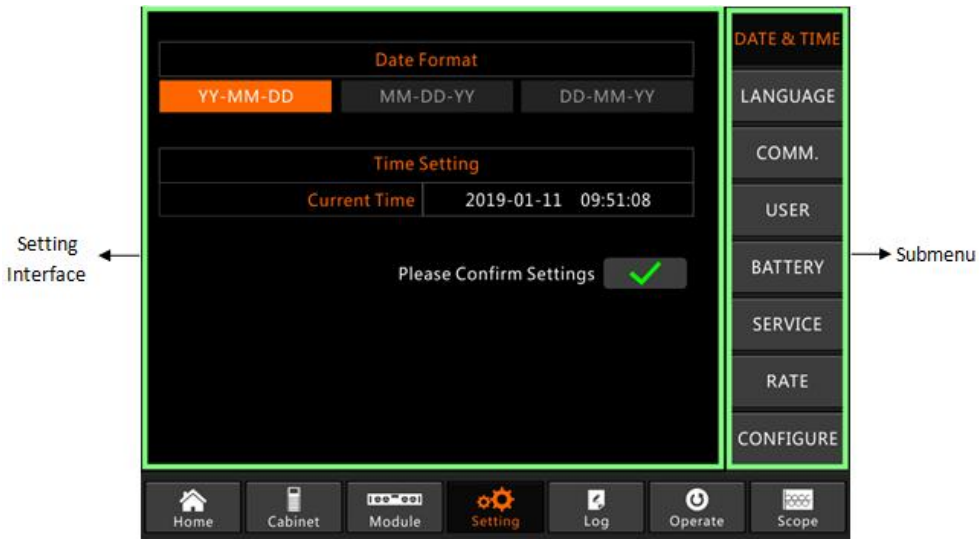

Figure 3-10 Setting menu

The submenus are listed on the right side of the Setting page. Users can enter each of the setting interfaces by touching the relevant icon.

3.3.3.1 Date & Time Setting

User can select the date format and set the correct date and the time, the setting interface is shown in Figure 3-11 below.

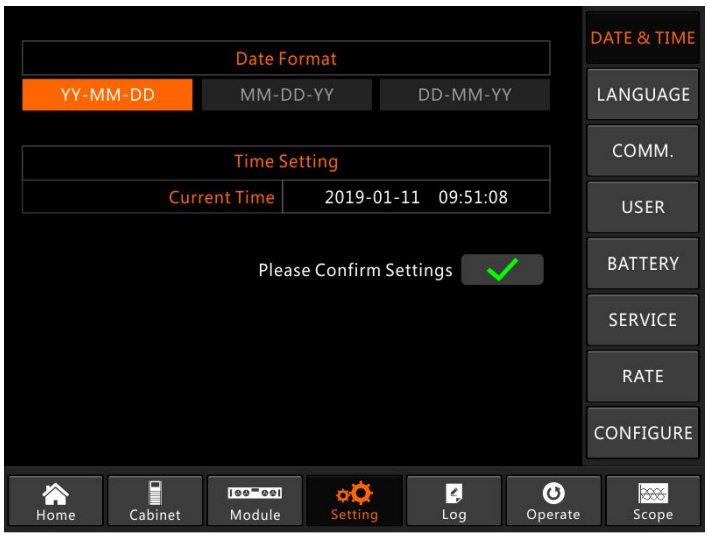

Figure 3-11 the setting interface of DATE & TIME

3.3.3.2 Language Setting

Users can select the language from the three kinds of languages, please note the group only contains 3 kinds of languages, if users need other language combinations; please inform the factory in advance. The setting interface is shown in Figure 3-12 below.

SEC.RU | Короткий путь к информации Скачано с sec.ru

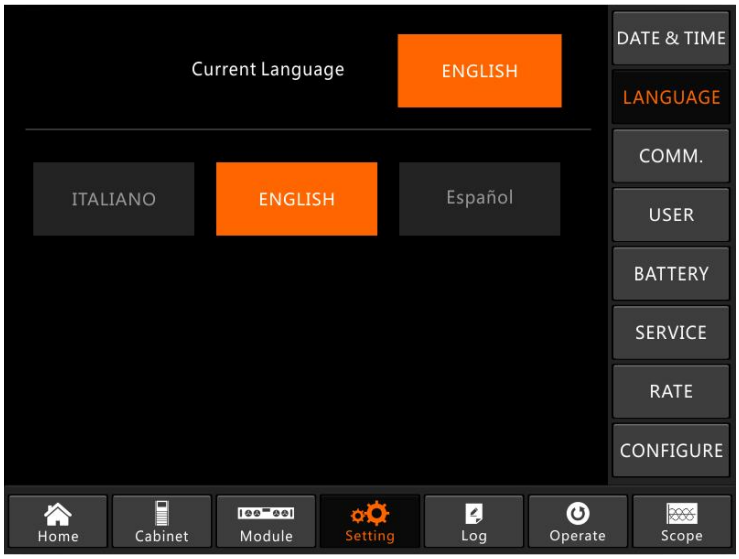

Figure 3-12 the setting interface of LANGUAGE

3.3.3.3 Communication Protocol Setting

The UPS provides the communication ports RS232 and RS485, and users also configure the optional SNMP card. If using the port RS232, please select the protocol “Modbus”, if RS485 or SNMP card, please select “SNT”. The setting interface is shown in Figure 3-13 below.

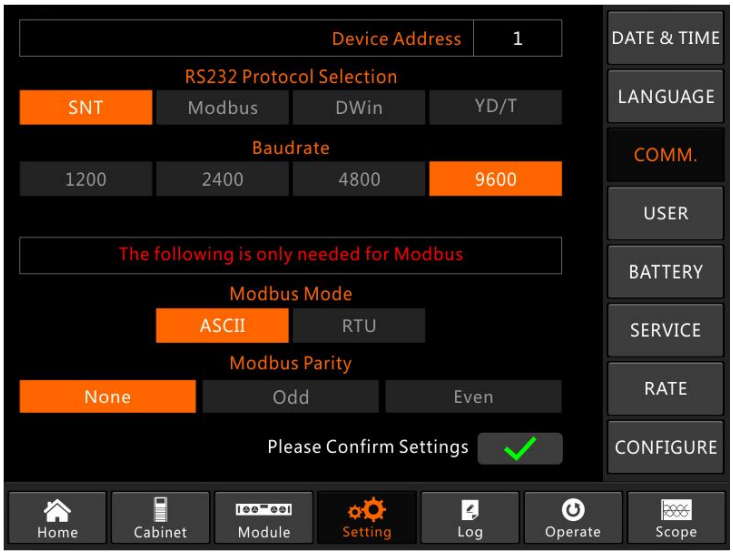

Figure 3-13 the setting interface of COMMUNICATION

3.3.3.4 User Setting

Users can adjust the output voltage above or below the rated voltage, the minimum scale is 1 voltage. And users also can set the range of the voltage and the frequency of the bypass. The setting interface is shown in Figure 3-14 below.

SEC.RU | Короткий путь к информации
Скачано с sec.ru

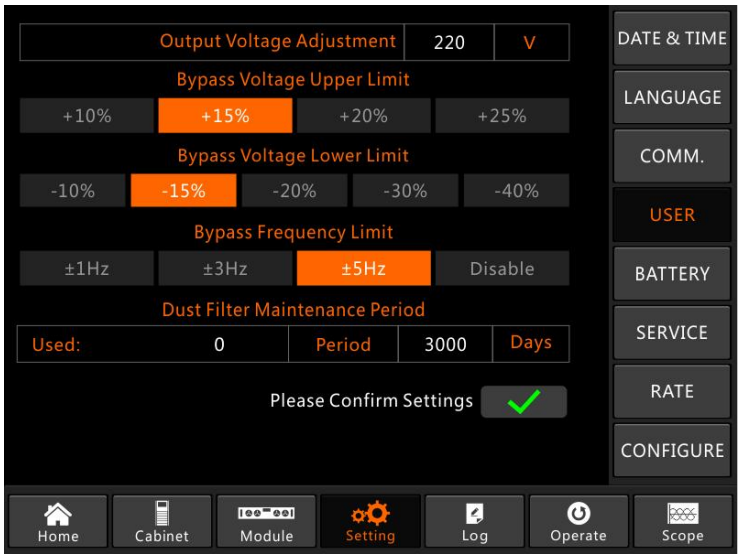

Figure 3-14 the setting interface of USER

3.3.3.5 Battery Setting

The setting of battery needs to be done after the first time of powering off or any changes done on the batteries. The battery configuration can be done through the LCD control panel.

- **Setting of battery type**

The battery type can be only set through the monitoring software. The system at present supports lead acid battery and Lithium iron phosphate battery (LFPB).

- **Setting of battery number**

1) Setting battery number for Lead-Acid battery

The nominal voltage of one block battery is 12V and for each block of battery, it consists of 6 cells (each cell of 2V). For the setting, as is shown in Figure 5-2, if the battery number is 40, it means that there are 40 blocks of batteries and both the positive and negative are 20 blocks of batteries. In the case of cell battery of 2V (usually with large capacity) is used, battery number should be the same as the block battery. The cell battery actually in use should be 240 cells (6*40), with both and positive and negative of 120 cells.
The battery number setting range is 32-44 (even number). But the available capacity of UPS should be 80% or 85% rated capacity when it's configured with 32 or 34 blocks of batteries.

2) Setting of battery number for LFPB

For the cell of each LFPB, the cell voltage is 3.2V; each battery block consists of 1 cell. In total, if 40 blocks of Lead-Acid batteries are used, for the LFPB, the number will be 150. Both the positive and negative are 75 cells.

SEC.RU | Короткий путь к информации Скачано с sec.ru

The battery number setting range is 140-180. The lowest EOD voltage for the LFPB will be 360V and highest voltage can be 620V.

- **Setting of battery capacity**

Users can set the capacity value of the battery block. For example, if the system is configured with 40 blocks of 12V/100AH batteries, the “Battery Capacity” should be 100AH, if 240 cells of 2V/1000AH batteries are used, the setting should be 1000AH.
In case of more than one string of batteries in parallel, the battery capacity setting value should be the times of the single string. For instance, if the configuration is two strings of 40 blocks of 12V/100AH battery capacity setting should be 200AH.
The system limits the charging current according to the battery capacity value. For the Lead-Acid battery, the charging current limit is 0.2C, and for LFPB, it is 0.3C.

- **Setting of float and boost charge**

In boost charging, the system charges the batteries with constant current. After the period, the system will enter into the float charging.
For the Lead-Acid battery, the default float charge voltage is 2.25V/cell; the default charge voltage is 2.35v/cell.
For the LFPB, the default float and boost charge voltage per cell is 3.45V/cell.

- **Setting of EOD voltage**

The EOD voltage 0.6C is the EOD voltage when the discharging current is larger than 0.6C; EOD voltage 0.15C is the EOD voltage when the discharging current is less than 0.15C. EOD voltage decreases linearly as the EOD voltage current increases from 0.15C to 0.6C, as shown in figure 3-15.

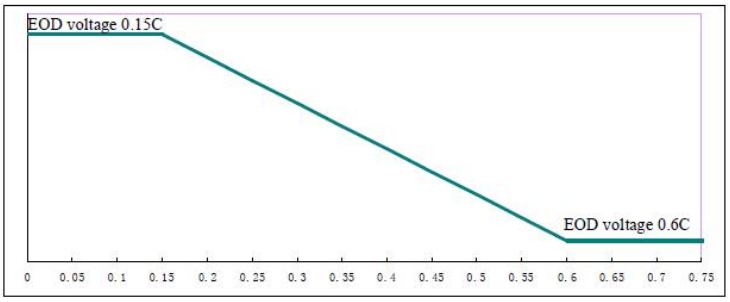

Figure 3-15 EOD voltage

For Lead-Acid battery, the cell voltage is suggested to set to 1.65V/cell at 0.6C, and set to 1.75V/cell at 0/15C.
For the LFPB battery, the cell voltage is suggested to set 2.7 V/cell at both 0.6C and 0.15C.

- **Charging current percent limit**

This setting is for limiting the charging power, the maximum charging power is 20% active power of the rated capacity of the UPS. If the battery number is 40 (40 blocks of 12V batteries), the maximum current that one power module can give according to the current limit (in percentage) is

SEC.RU | Короткий путь к информации Скачано с sec.ru

shown in Table 3-8.

The actual charging current is also limited by the battery capacity. Refer to the setting of battery capacity.

Table 3-8 Current limits for per power module

Current limit (%)	Max charging current(A)	
	40KVA power module	50KVA power module
1	0.71	0.80
2	1.42	1.60
3	2.13	2.40
4	2.84	3.20
5	3.55	4.00
6	4.26	4.80
7	4.97	5.60
8	5.68	6.40
9	6.39	7.20
10	7.10	8.00
11	7.81	8.80
12	8.52	9.60
13	9.23	10.40
14	9.94	11.20
15	10.65	12.00
16	11.36	12.80
17	12.07	13.60
18	12.78	14.40
19	13.49	15.20
20	14.20	16.00

- **Battery temperature compensate**

The setting “Battery Temperature Compensate”, this is an optional function, and it needs to configure a NTC temperature sensor, and the sensor should connected to the dry contact port J2. The principle is that the UPS adjusts the charging voltage as per the variation of battery environment temperature, 25℃ is the standard temperature, when the temperature rises to 26℃, and the default value is 3, UPS will reduce the charging voltage, the value reduced is 18mV/block, in the same way, if it drops to 24℃, UPS should raise the charging voltage.

- **Boost charge time limit**

This is for setting the boost charge time. The system transfers to float charge when the boost charge time has passed. The setting range can be 1-48 hours.

- **Auto boost period**

This is for setting the auto boost period time. When the setting time is up, the system boost charges the batteries. It is suggested to boost charge the battery every three months, and set the period to 4320 hours.

- **Auto maintenance discharge period**

When the auto maintenance discharge period is reached, the system discharges the batteries. This function should be enabled through the monitoring software.

SEC.RU | Короткий путь к информации Скачано с sec.ru

The EOD voltage of auto maintenance discharge is 1.05 times of the normal EOD voltage.

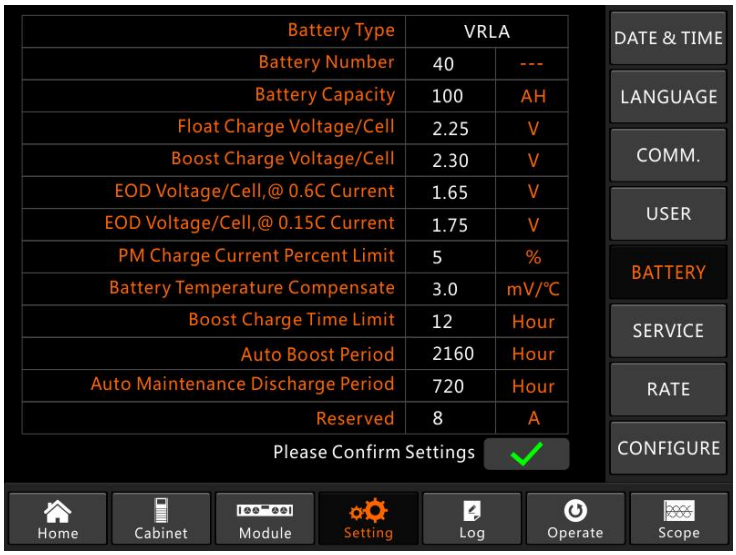

(a) The setting for VRLA

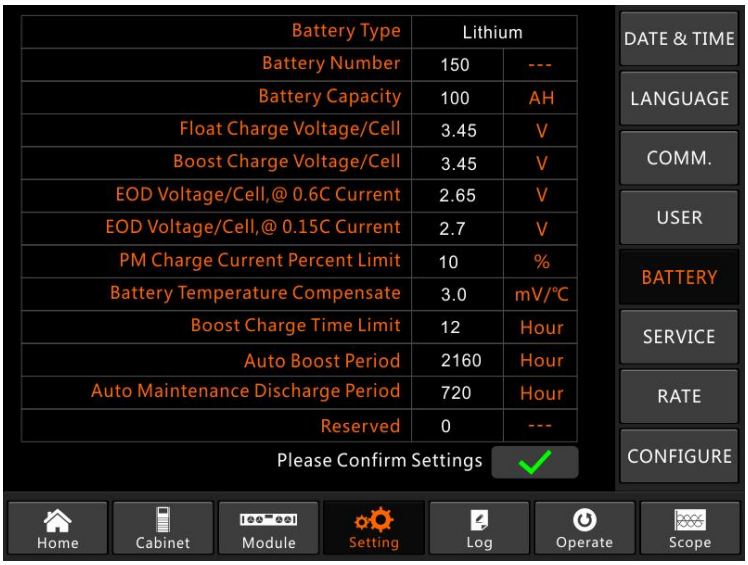

(b) The setting for Lithium (LFPB)

Figure 3-16 the setting interface of BATTERY

3.3.3.6 Service Setting

Users can select the system mode. If it's a parallel system, users can configure the parallel parameters. Users can also set the redundant module number and the delay time from battery to utility. The setting interface is shown in Figure 3-17.

SEC.RU | Короткий путь к информации Скачано с sec.ru

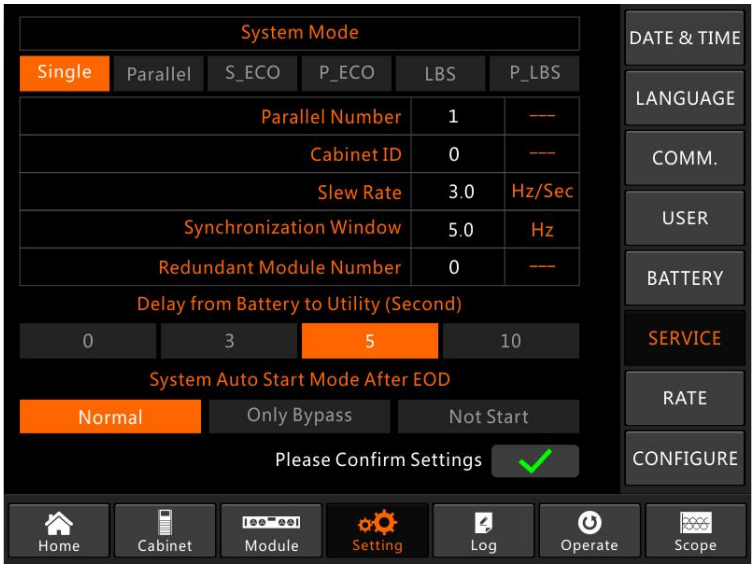

Figure 3-17 the setting interface of SERVICE

The submenus are described in details below in Table 3-9.

Table 3-9 Descriptions of each submenu of Setting

Submenu Name	Contents	Meaning
Date&Time	Date format setting	Three formats: (a) year/month/day, (b)
	Time setting	Setting time
Language	Current language	Language in use
	Language selection	Simplified Chinese and English selectable
COMM.	Device Address	Setting the communication address
	RS232 Protocol Selection	SNT Protocol, ModBus Protocol, YD/T Protocol and Dwin（For factory use）
	Baudrate	Setting the baudrate of SNT, ModBus and YD/T
	Modbus Mode	Setting mode for Modbus:ASCII and RTU selectable
	Modbus parity	Setting the parity for Modbus
USER	Output voltage Adjustment	Setting the Output Voltage
	Bypass Voltage Up Limited	Up limited working Voltage for Bypass，settable:+10%，+15%，+20%，+25%
	Bypass Voltage Down Limited	Down limited working Voltage for Bypass，settable:-10%，-15%，-20%，-30%，-40%
	Bypass Frequency Limited	Permitted working Frequency for Bypass
	Dust Filter Maintenance	Setting Dust Filter Maintenance Period
BATTERY	Battery Number	Setting the number of the battery（12V）
	Battery Capacity	Setting of the AH of the battery
	Float Charge Voltage/Cell	Setting the floating Voltage for battery cell（2V）
	Boost Charge Voltage/Cell	Setting the boost Voltage for battery cell（2V）

SEC.RU | Короткий путь к информации
Скачано с sec.ru

Submenu Name	Contents	Meaning
	EOD(End of discharge) Voltage/Cell,@0.6C Current	EOD voltage for cell battery,@0.6C current
	EOD(End of charge) Voltage/Cell,@0.15C Current	EOD voltage for cell battery,@0.15C current
	Charge Current Percent Limit	Charge current (percentage of the rated current)
	Battery Temperature	Coefficient for battery temperature
	Boost Charge Time Limit	Setting boost charging time
	Auto Boost Period	Setting the auto boost period
	Auto Maintenance Discharge Period	Setting the period for auto maintenance discharge
SERVICE	System Mode	Setting the system mode: Single , parallel, Single ECO, parallel ECO,LBS, parallel LBS
RATE	Configure the rated	For the factory use
CONFIGURE	Configure the system	For the factory use

Note

- Users have various permissions to the configuration of the Setting :(a) for the Date &Time, LANGUAGE and COMM, user can set on their own without password. (b)For the USER, a one-level password is needed and the setting must be done by commissioning engineer (c) For the Battery and SERVICE, a Two-level password is needed and it is set by the after-service personal. (d)For the RATE and CONFIGURE, a Three-level password is needed and it is set only by the factory.
- The “C” stands for Ampere number. For instance, if the battery is 100AH, then C=100A.

Warning

- **Ensure the number of the battery, set via the menu or the monitoring software, is completely equal to the real installed number. Otherwise it may cause serious damage to the batteries or the equipment.**

3.3.4 Log menu

Touch the icon

, (At the bottom of the screen), and the system enters the interface of the Log, as it is shown in Figure 3-12. The log is listed in reverse chronological order (i.e. the first on the screen with #1 is the newest), which displays the events, warnings and faults information and the data and time they occur and disappear.

SEC.RU | Короткий путь к информации Скачано с sec.ru

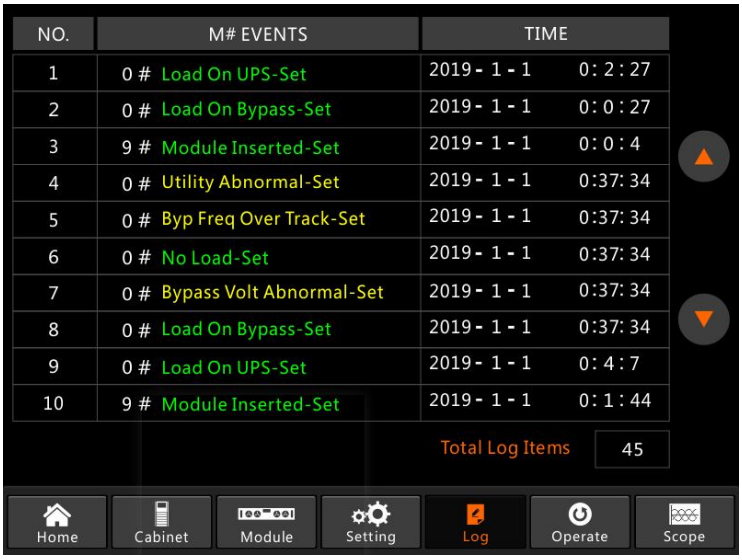

Figure 3-12 Log menu

Every event record in the table includes the sequence number, the content of the event and the time stamp when it occurs, as is marked in the red box.

- Sequence number

The sequence numbers of event.

- Content of the event

Display the information of events, warnings and faults (0# means the event happens to the cabinet, n# means the information is sent by the nth power module).

- Time for the event

The time the event occurs.

- Total Log Items

Display the total number of events. The system can record 895 events. If the number exceeds 895, the system will delete the earliest events.

-

Turn the list page up/down to check the information of the events.

The Table 3-9 below displays all the events and gives a brief explanation

Table 3-9 the list for events

NO.	UPS events	Description
1	Fault Clear	Manually clear fault
2	Log Clear	Manually clear History log
3	Load On UPS	Inverter feeds load
4	Load On Bypass	Bypass feeds load
5	No Load	No load
6	Battery Boost	Charger is working in boost charging mode
7	Battery Float	Charger is working in float charging mode
8	Battery Discharge	Battery is discharging
9	Battery Connected	Battery is connected already.
10	Battery Not	Battery is not yet connected.

SEC.RU | Короткий путь к информации Скачано с sec.ru

11	Maintenance CB	Manual maintenance breaker is closed
12	Maintenance CB	Manual maintenance breaker is opened
13	EPO	Emergency Power Off
14	Module On Less	Available power module capacity is less than the load capacity. Please reduce the load capacity or add extra power module to make sure that the UPS capacity is big enough.
15	Generator Input	Generator is connected and a signal is sent to the UPS.
16	Utility Abnormal	Utility (Grid) is abnormal. Mains voltage or frequency exceeds the upper or lower limit and results in rectifier shutdown. Check the input phase voltage of rectifier.
17	Bypass Sequence Error	Bypass voltage Sequence is reverse. Check if input power cables are connected correctly.
18	Bypass Volt Abnormal	This alarm is triggered by an inverter software routine when the amplitude or frequency of bypass voltage exceeds the limit. The alarm will automatically reset if the bypass voltage becomes normal. First check if relevant alarm exists, such as “bypass circuit breaker open”, “Byp Sequence Err” and “Ip Neutral Lost”. If there is any relevant alarm, first clear this alarm. 1. Then check and confirm if the bypass voltage and frequency displayed on the LCD are within the setting range. Note that the rated voltage and frequency are respectively specified by “Output Voltage” and “Output Frequency”. 2. If the displayed voltage is abnormal, measure the actual bypass voltage and frequency. If the measurement is abnormal, check the external bypass power supply. If the alarm occurs frequently, use the configuration software to increase the bypass high limit set point according to the user’s suggestions.
19	Bypass Module Fail	Bypass Module Fails. This fault is locked until power off. Or bypass fans fail.
20	Bypass Module Over Load	Bypass current is over the limitation. If bypass current is under 135% of the rated current. The UPS alarms but has no action.
21	Bypass Over Load Tout	The bypass overload status continues and the overload times out.

SEC.RU | Короткий путь к информации Скачано с sec.ru

22	Byp Freq Over Track	This alarm is triggered by an inverter software routine when the frequency of bypass voltage exceeds the limit. The alarm will automatically reset if the bypass voltage becomes normal. First check if relevant alarm exists, such as “bypass circuit breaker open”, “Byp Sequence Err” and “Ip Neutral Lost”. If there is any relevant alarm, first clear this alarm. 1. Then check and confirm if the bypass frequency displayed on the LCD are within the setting range. Note that the rated frequency are respectively specified by “Output Frequency”. 2. If the displayed voltage is abnormal, measure the actual bypass frequency. If the measurement is abnormal, check the external bypass power supply. If the alarm occurs frequently, use the configuration software to increase the bypass high limit set point according to the user’s suggestions.
23	Exceed Tx Times Lmt	The load is on bypass because the output overload transfer and re-transfer is fixed to the set times during the current hour. The system can recover automatically and will transfer back to the inverter with 1 hour.
24	Output Short Circuit	Output shorted Circuit. Fist check and confirm if loads have something wrong. Then check and confirm if there is something wrong with terminals, sockets or some other power distribution unit. If the fault is solved, press “Fault Clear” to restart UPS.
25	Battery EOD	Inverter turned off due to low battery voltage. Check the mains power failure status and recover the mains power in time
26	Battery Test	System transfer to battery mode for 20 seconds to check if batteries are normal
27	Battery Test OK	Battery Test OK
28	Battery Maintenance	System transfer to battery mode until to be 1.1*EOD voltage to maintenance battery string
29	Battery Maintenance OK	Battery maintenance succeed
30	Module inserted	Power Module is inserted in system.
31	Module Exit	Power Module is pulled out from system.
32	Rectifier Fail	The N# Power Module Rectifier Fail, The rectifier is fault and results in rectifier shutdown and battery discharging.
33	Inverter Fail	The N# Power Module Inverter Fail. The inverter output voltage is abnormal and the load transfers to bypass.

SEC.RU | Короткий путь к информации Скачано с sec.ru

34	Rectifier Over Temp.	The N# Power Module Rectifier Over Temperature. The temperature of the rectifier IGBTs is too high to keep rectifier running. This alarm is triggered by the signal from the temperature monitoring device mounted in the rectifier IGBTs. The UPS recovers automatically after the over temperature signal disappears. If over temperature exists, check: 1. Whether the ambient temperature is too high. 2. Whether the ventilation channel is blocked. 3. Whether fan fault happens. 4. Whether the input voltage is too low.
35	Fan Fail	At least one fan fails in the N# power module.
36	Output Over load	The N# Power Module Output Over Load. This alarm appears when the load rises above 100% of nominal rating. The alarm automatically resets once the overload condition is removed. 1. Check which phase has overload through the load (%) displayed in LCD so as to confirm if this alarm is true. 2. If this alarm is true, measure the actual output current to confirm if the displayed value is correct. Disconnect non-critical load. In parallel system, this alarm will be triggered if the load is severely imbalanced.
37	Inverter Overload Tout	N# Power Module Inverter Over Load Timeout. The UPS overload status continues and the overload times out. Note: The highest loaded phase will indicate overload timing-out first. When the timer is active, then the alarm “unit over load” should also be active as the load is above nominal. When the time has expired, the inverter Switch is opened and the load transferred to bypass. If the load decreases to lower than 95%, after 2 minutes, the system will transfer back to inverter mode. Check the load (%) displayed in LCD so as to confirm if this alarm is true. If LCD displays that overload happens, then check the actual load and confirm if the UPS has over load before alarm happens.

SEC.RU | Короткий путь к информации Скачано с sec.ru

38	Inverter Over Temp.	The N# Power Module Inverter Over Temperature. The temperature of the inverter heat sink is too high to keep inverter running. This alarm is triggered by the signal from the temperature monitoring device mounted in the inverter IGBTs. The UPS recovers automatically after the over temperature signal disappears. If over temperature exists, check: Whether the ambient temperature is too high. Whether the ventilation channel is blocked. Whether fan fault happens. Whether inverter overload time is out.
39	On UPS Inhibited	Inhibit system transfer from bypass to UPS (inverter). Check: Whether the power module's capacity is big enough for load. Whether the rectifier is ready. Whether the bypass voltage is normal.
40	Manual Transfer Byp	Transfer to bypass manually
41	Esc Manual Bypass	Escape from "transfer to bypass manually" command. If UPS has been transferred to bypass manually, this command enable UPS to transfer to inverter.
42	Battery Volt Low	Battery Voltage is Low. Before the end of discharging, battery voltage is low warning should occur. After this pre-warning, battery should have the capacity for 3 minutes discharging with full load.
43	Battery Reverse	Battery cables are connected not correctly.
44	Inverter Protect	The N# Power Module Inverter Protect. Check: Whether inverter voltage is abnormal Whether inverter voltage is much different from other modules, if yes, please adjust inverter voltage of the power module separately.
45	Input Neutral Lost	The mains neutral wire is lost or not detected. For 3 phases UPS, it's recommended that user use a 3-poles breaker or switch between input power and UPS.
46	Bypass Fan Fail	At least one of bypass module Fans Fails
47	Manual Shutdown	The N# Power Module is manually shutdown. The power module shuts down rectifier and inverter, and there's on inverter output.
48	Manual Boost Charge	Manually force the Charger work in boost charge mode.
49	Manual Float Charge	Manually force the charger work in float charge mode.
50	UPS Locked	Forbidden to shutdown UPS power module manually.

SEC.RU | Короткий путь к информации Скачано с sec.ru

51	Parallel Cable Error	Parallel cables error. Check: If one or more parallel cables are disconnected or not connected correctly If parallel cable round is disconnected If parallel cable is OK
53	Lost N+X Redundant	Lost N+X Redundant. There is no X redundant powers module in system.
54	EOD Sys Inhibited	System is inhibited to supply after the battery is EOD (end of discharging)
55	Battery Test Fail	Battery Test Fail. Check if UPS is normal and battery voltage is over 90% of float voltage.
56	Battery Maintenance Fail	Check If UPS is normal and not any alarms If the battery voltage is over 90% of float voltage If load is over 25%
57	Ambient Over Temp	Ambient temperature is over the limit of UPS. Air conditioners are required to regulate ambient temperature.
58	REC CAN Fail	Rectifier CAN bus communication is abnormal. Please check if communication cables are not connected correctly.
59	INV IO CAN Fail	IO signal communication of inverter CAN bus is abnormal. Please check if communication cables are not connected correctly.
60	INV DATA CAN Fail	DATA communication of inverter CAN bus is abnormal. Please check if communication cables are not connected correctly.
61	Power Share Fail	The difference of two or more power modules' output current in system is over limitation. Please adjust output voltage of power modules and restart UPS.
62	Sync Pulse Fail	Synchronization signal between modules is abnormal. Please check if communication cables are not connected correctly.
63	Input Volt Detect Fail	Input voltage of N# power module is abnormal. Please check if the input cables are connected correctly. Please check if input fuses are broken. Please check if utility is normal.
64	Battery Volt Detect Fail	Battery voltage is abnormal. Please check if batteries are normal. Please check if battery fuses are broken on input power board.
65	Output Volt Fail	Output voltage is abnormal.
66	Bypass Volt Detect Fail	Bypass voltage is abnormal. Please check if bypass breaker is closed and is good. Please check if bypass cables are connected correctly.
67	INV Bridge Fail	Inverter IGBTs are broken and opened.

SEC.RU | Короткий путь к информации Скачано с sec.ru

68	Outlet Temp Error	Outlet temperature of power module is over the limitation. Please check if fans are abnormal. Please check if PFC or inverter inductors are abnormal. Please check if air passage is blocked. Please check if ambient temperature is too high.
69	Input Curr Unbalance	The difference of input current between every two phases is over 40% of rated current. Please check if rectifier's fuses, diode, IGBT or PFC diodes are broken. Please check if input voltage is abnormal.
70	DC Bus Over Volt	Voltage of DC bus capacitors is over limitation. UPS shutdown rectifier and inverter.
71	REC Soft Start Fail	While soft start procedures are finished, DC bus voltage is lower than the limitation of calculation according utility voltage. Please check Whether rectifier diodes are broken Whether PFC IGBTs are broken Whether PFC diodes are broken Whether drivers of SCR or IGBT are abnormal Whether soft start resistors or relay are abnormal
72	Relay Connect Fail	Inverter relays are opened and cannot work or fuses are broken.
73	Relay Short Circuit	Inverter relays are shorted and cannot be released.
74	PWM Sync Fail	PWM synchronizing signal is abnormal
75	Intelligent Sleep	UPS works in intelligent sleep mode. In this mode, the power modules will be standby in turn. It will be more reliability and higher efficiency. It must be confirmed that remained power modules' capacity is big enough to feed load. It must be conformed that working modules' capacity is big enough if user add more load to UPS. It's recommended that sleeping power modules are waken up if the capacity of new added loads is not sure.
76	Manual Transfer to INV	Manually transfer UPS to inverter. It's used to transfer UPS to inverter when bypass is over track. The interrupt time could be over 20ms.
77	Input Over Curr Tout	Input over current timeout and UPS transfer to battery mode. Please check if input voltage is too low and output load is big. Please regulate input voltage to be higher if it's possible or disconnect some loads.
78	No Inlet Temp.	Inlet temperature sensor is not connected correctly.
79	No Outlet Temp. Sensor	Outlet temperature sensor is not connected correctly.
80	Inlet Over Temp.	Inlet air is over temperature. Make sure that the operation temperature of UPS is between 0-40°C.

SEC.RU | Короткий путь к информации Скачано с sec.ru

81	Capacitor Time	Reset timing of DC bus capacitors.
82	Fan Time Reset	Reset timing of fans.
83	Battery History Reset	Reset battery history data.
84	Byp Fan Time Reset	Reset timing of bypass fans.
85	Battery Over Temp.	Battery is over temperature. It's optional.
86	Bypass Fan Expired	Working life of bypass fans is expired, and it's recommended that the fans are replaced with new fans. It must be activated via software.
87	Capacitor Expired	Working life of capacitors is expired, and it's recommended that the capacitors are replaced with new capacitors. It must be activated via software.
88	Fan Expired	Working life of power modules' fans is expired, and it's recommended that the fans are replaced with new fans. It must be activated via software.
89	INV IGBT Driver Block	Inverter IGBTs are shutdown. Please check if power modules are inserted in cabinet correctly. Please check if fuses between rectifier and inverter are broken.
90	Battery Expired	Time for battery maintenance check; If battery is abnormal, it need to replace the new battery and discharge once time.
91	Bypass CAN Fail	The CAN bus between bypass module and cabinet is abnormal.
92	Dust Filter Expired	Dust filter need to be clear or replaced with a new one
93	Wave Trigger	Waveform has been saved while UPS fail
94	Bypass CAN Fail	Bypass and cabinet communicate with each other via CAN bus. Check If connector or signal cable is abnormal. If monitoring board is abnormal.
95	Firmware Error	Manufacturer used only.
96	System Setting	Manufacturer used only.
97	Bypass Over Temp.	Bypass module is over temperature. Please check If bypass load is overload If ambient temperature is over 40°C If bypass SCRs are assembled correctly If bypass fans are normal
98	Module ID Duplicate	At least two modules are set as same ID on the power connector board, please set the ID as correct sequence

Note

Different colors of the words represent different level of events:

(a)Green, an event occurs;

SEC.RU | Короткий путь к информации Скачано с sec.ru

(b)Grey, the event occurs then clears;
(c)Yellow, warning occurs;
(d) Red, faults happen.

3.3.5 Operate menu

Touch the icon 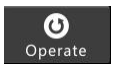

(at the bottom of the screen), and the system enters the page of the "Operate", as it is shown in Figure 3-13.

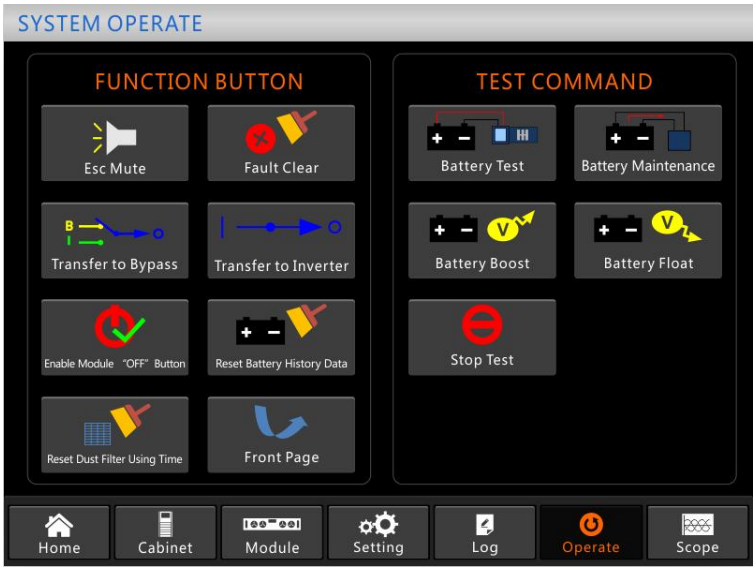

Figure 3-13 Operate menu

The "Operate" menu includes "FUNCTION BUTTION" and "TEST COMMAND". The contents are described in details below.

Function Button

Clear/Restore Buzzing

Mute or Restore buzzing of the system by touching the icon

or

.

Fault Clear

Clear the faults by touching the icon .

Transfer to and ESC Bypass

Transfer to bypass mode or cancel this command by touching the icon

or

.

Transfer to Inverter

Transfer the bypass mode to Inverter Mode by touching the icon

.

SEC.RU | Короткий путь к информации Скачано с sec.ru

Enable Module" OFF" Button

Enable the switch for powering off the Power Module by touching the icon

.

Reset Battery History Data

Reset the battery history data by touching the icon

, the history data includes the times of discharge, days for running and hours of discharging.

Reset Dust Filter Using time

Reset the time of dust filter using by touching the icon

, it includes the days of using and maintenance period.

Test Command

Battery Test

By touching the icon

, the system transfer to the battery mode to test the condition of the battery. Ensure the bypass is working normally and the capacity of the battery is no less than 25%.

Battery Maintenance

By touching the icon

, the system transfer to the battery mode. This function is used for maintaining the battery, which requires the normality of the bypass and minimum capacity of 25% for the battery.

Battery Boost

By touching the icon

, the system starts boost charging.

Battery Float

By touching the icon 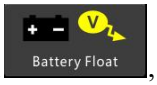

, the system starts float charging.

Stop Test

By touching the icon

, the system stops battery test or battery maintenance.

3.3.6 Scope menu

Touch the icon 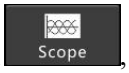

, (at the bottom right of the screen), and the system enters the page of the Scope, as it is shown in Figure 3-14.

SEC.RU | Короткий путь к информации Скачано с sec.ru

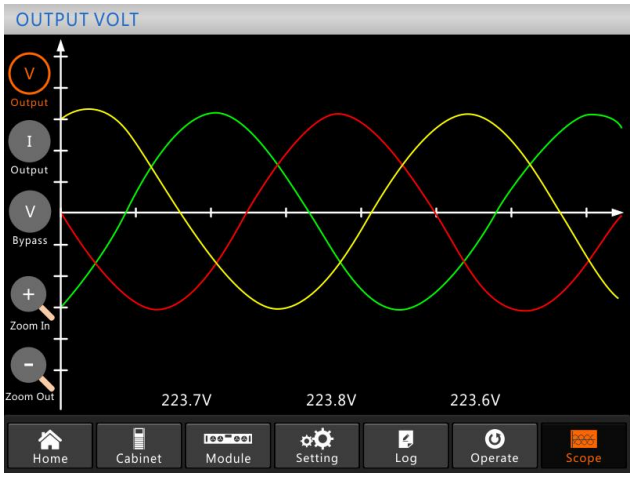

Figure 3-14 Scope menu

Users can view the waves for output voltage, output current and bypass voltage by touching the corresponding icon in the left side of the interface. The waves can be zoomed in and zoom out.

-

Touch the icon to display the 3- phase output voltage.

-

Touch the icon to display the 3-phase output current.

-

Touch the icon to display the 3-phase bypass voltage.

-

Touch the icon to zoom in the wave.

-

Touch the icon to zoom out wave

SEC.RU | Короткий путь к информации
Скачано с sec.ru

4 Operations

4.1 UPS Start-up

4.1.1 Startup in normal mode

The UPS must be started up by commissioning engineer after the completeness of installation. The steps below must be followed:

1) Ensure all the circuit breakers are open.

A) For 2-slot cabinet system, one by one to turn on the output breaker (Q4), input breaker (Q1), bypass input breaker (Q2), and then the system starts initializing.

B) For 4-slot and 6-slot cabinet systems, there is only one manual bypass breaker in the cabinet, please one by one to turn on the external input breaker, the external bypass input breaker, and then the system starts initializing.

C) For 8-slot and 10-slot cabinet system, one by one to turn on the input breaker (Q1), the bypass input breaker (Q4), the output breaker (Q3), and then the system starts initializing.

2) The LCD in front of the cabinet is lit up. The system enters the home page, as shown in Figure 3-4.

4) Notice the energy bar in the home page, and pay attention to the LED indicators. The “REC” indicator flashes, it indicates the rectifier is starting up. The LED indicators are listed below in Table 4-1.

Table 4-1 Rectifier starting up

Indicator	Status	Indicator	Status
Rectifier	green flashing	Inverter	off
Battery	red	Load	off
Bypass	off	Status	red

5) After about 30 seconds, the “REC” indicator goes steady green; it means the finish of the rectifier startup. And at the same time the static bypass switch closes, and then the inverter is starting up. The LED indicators are listed below in Table 4-2.

Table 4-2 Inverter starting up

Indicator	Status	Indicator	Status
Rectifier	green	Inverter	green flashing
Battery	red	Load	green
Bypass	green	Status	red

6) After 90 seconds, the UPS transfer from the bypass to the inverter after the inverter goes normal. The LED indicators are listed below in Table 4-3.

Table 4-3 Inverter supplying the load

Indicator	Status	Indicator	Status

SEC.RU | Короткий путь к информации Скачано с sec.ru

Indicator	Status	Indicator	Status
Rectifier	green	Inverter	green
Battery	red	Load	green
Bypass	off	Status	red

7) The UPS is in normal mode. Close the external battery circuit breaker and the UPS starts charging batteries. The LED indicators are listed below in Table 4-4.

Table 4-4 Normal mode

Indicator	Status	Indicator	Status
Rectifier	green	Inverter	green
Battery	green	Load	green
Bypass	off	Status	green

8) The startup has finished, users can close the external main output breaker, and then close the branch breakers one by one.

Note

- When the system starts, the stored setting will be loaded.
- Users can browse all events during the process of the starting up by checking the menu Log.
- Users can check the information of the power module by the keys in the front of it.

4.1.2 Start from battery

The start from battery refers to the battery cold start. The steps of the start-up are as follow:
1) Confirm the batteries are correctly connected, and at least one power module is installed into the cabinet, and then close the external battery circuit breakers.
2) Press and hold the red button of battery cold start until the “BAT” indicator turns green flashing, it indicates the system is been powering by the batteries. The position of the battery cold start button for 6-slot cabinet UPS is shown in Figure 4-1.

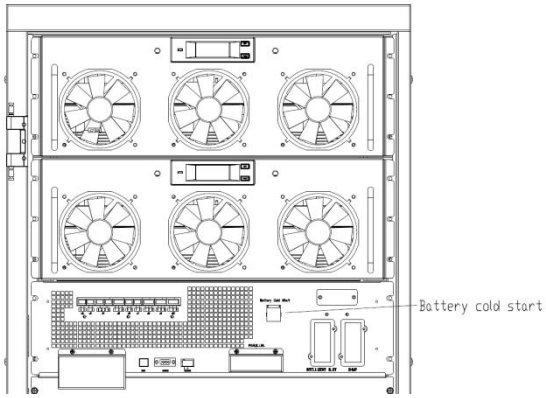

(a) Battery cold start button location for 2-slot cabinet UPS

SEC.RU | Короткий путь к информации Скачано с sec.ru

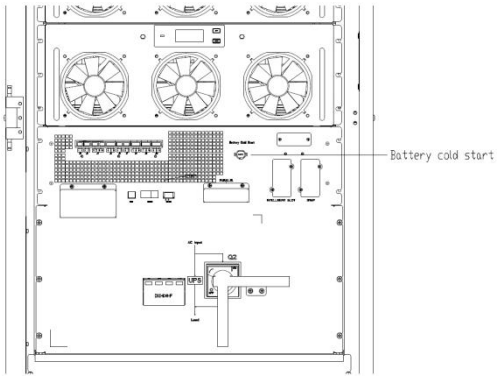

(b) Battery cold start button location for 4-slot cabinet UPS

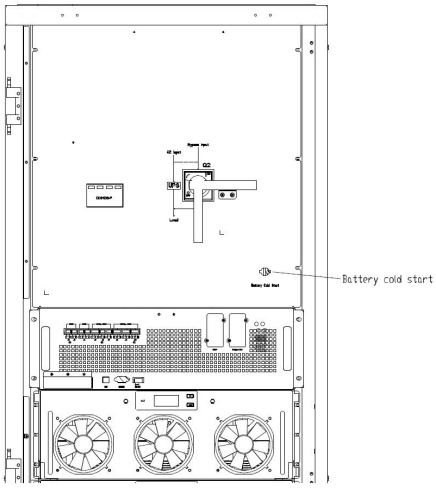

(c) Battery cold start button for 6-slot cabinet UPS

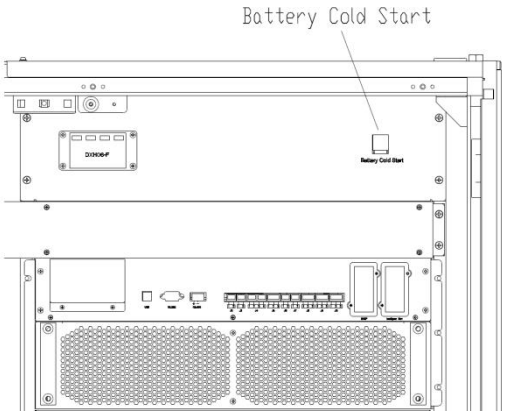

(d) Battery cold start button for 400kVA UPS

SEC.RU | Короткий путь к информации
Скачано с sec.ru

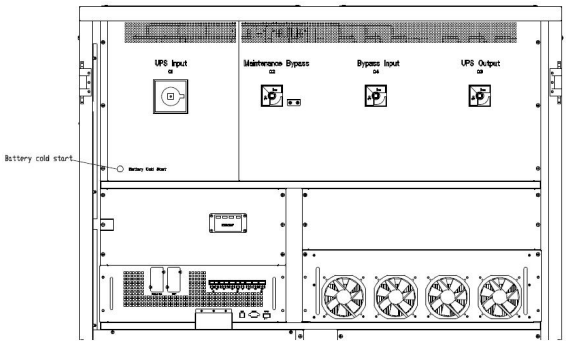

(e) Battery cold start button for 10-slot cabinet UPS

Figure 4-1 the position of the battery cold start button

3) After about 30 second, the “BAT” indicator turns steady green, the “INV” indicator starts green flashing, and then after 30 seconds it turns steady green and the “OUTPUT” indicator turns green from off. The LED indicators are listed below in Table 4-5

Table 4-5 the battery mode

Indicator	Status	Indicator	Status
Rectifier	red flashing	Inverter	green
Battery	green flashing	Load	green
Bypass	red flashing	Status	red

4) Close the external output power supply isolators to supply the loads, and the system is working in battery mode.

Note: For 2-slot and 4-slot cabinet UPS, the battery cold start function is optional; for 6-slot 8-slot and 10-slot cabinet UPS, it is standard.

4.2 UPS Shut down

If want to shut down UPS completely, please first ensure the load is shut down correctly, and then turn off the external battery breaker, the main input breaker (internal or external), the bypass input breaker (internal or external, if have) one by one, the display screen will be off completely.

Note: If UPS in maintenance bypass mode, please also turn off the maintenance bypass breaker.

4.3 Procedure for Switching between Operation Modes

4.3.1 Switching the UPS from normal mode into battery mode

The UPS transfers to battery mode immediately after the utility (mains voltage) fails or drops down below the predefined limit.

4.3.2 Switching the UPS from normal mode into bypass mode

Two ways to transfer the UPS into bypass mode from normal mode:

SEC.RU | Короткий путь к информации Скачано с sec.ru

1) Enter the menu “Operate”, touch the icon “transfer to bypass” 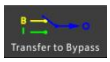

and the system should transfer to bypass mode.
2) Press and hold the “BYP” key on the operator control panel for longer than 2 seconds and the system should transfer to bypass mode. This needs to enable the switch behind the front door. The key is shown below in Figure 4-2.

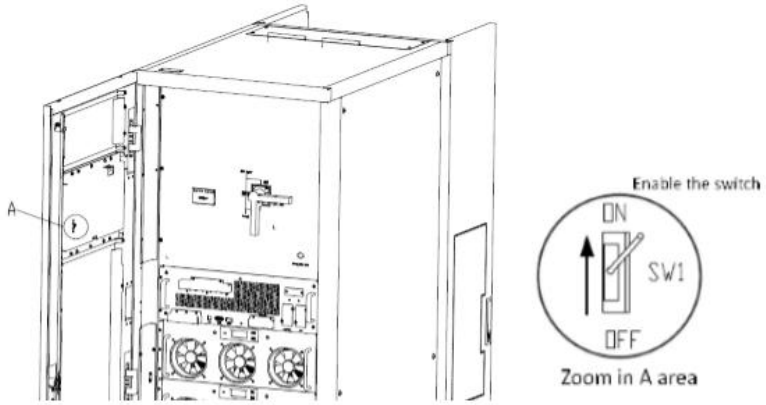

Figure 4-2 enabling the switch

Warning

Ensure the bypass is working normally before transferring to bypass mode. Or it may cause failure.

4.3.3 Switching the UPS into normal mode from bypass mode

Two ways to transfer the UPS into normal mode from bypass mode:

1) Enter the menu “Operate”, touch the icon “transfer to inverter”

and the system should transfer to bypass mode.
2) Press and hold the “INV” key on the operator control panel for longer than 2 seconds and the system transfers to normal mode.

Note

Normally, the system will transfer to the normal mode automatically. This function is used when the frequency of the bypass is over track and when the system needs to transfer to Normal mode by manual.

SEC.RU | Короткий путь к информации Скачано с sec.ru

4.3.4 Switching the UPS into maintenance bypass mode from normal mode

These following procedures can transfer the load from the UPS inverter output to the maintenance bypass supply.

1) Transfer the UPS into bypass mode following as per chapter 4.2.2.

2) Open the battery breaker and close the internal or external maintenance bypass (for 2-solt cabinet UPS, there is one internal maintenance breaker, it's Q3; for 4-slt or 6-slot cabinet UPS, there is only one manual bypass switch, it's used together with external breakers; for 8-slot or 10-slot cabinet UPS, there is one internal maintenance breaker, it's Q2). And the load is powered through the maintenance bypass and the static bypass.

3) Turn off the external battery breaker, the main input breaker (internal or external), the bypass input breaker (internal or external), and the output breaker (internal or external) one by one.

A) For 2-slot cabinet UPS, please first turn off the external battery breaker, and then turn off the main input breaker (Q1), the bypass input breaker (Q2), the output breaker (Q4).

B) For 4-slot or 6-slot cabinet UPS, there is only one manual bypass switch in the cabinet, suggest to configure some external breaker, for example, the input breaker (if dual input, it needs 2 input breakers: one main input breaker and one bypass input breaker); the external maintenance bypass breaker and the output breaker. First turn off the external battery breaker, and then turn off the external input breaker, the external output breaker one by one.

C) For 8-slot and 10-slot cabinet UPS, please turn off the external battery breaker, and then turn off the main input breaker (Q1), the bypass input breaker (Q4), and the output breaker (Q3) one by one.

Note

- 4-slot cabinet and 6-slot cabinet only have a manual bypass breaker. In manual bypass mode (The manual bypass supplies power to loads), dangerous voltages are present on terminal and internal Copper bar.
- 4-slot cabinet and 6-slot cabinet need to use external circuit breakers (Includes external input breaker, external bypass input breaker, external output breaker and external maintenance bypass breaker).

Warning

Before making this operation, please read messages on LCD display to ensure that bypass supply is regular and the inverter is synchronous with it, so as not to risk a short interruption in powering the load.

Danger

If you need to maintain the power module, wait for 5 minutes to let the DC bus capacitor fully discharge before removing the cover.

SEC.RU | Короткий путь к информации Скачано с sec.ru

4.3.5 Switching the UPS into normal mode from maintenance bypass mode

These following procedures can transfer the load from the maintenance bypass mode to the inverter output.

1) Close the bypass breaker (internal or external), and the LCD touch screen goes on, after 30 seconds, the “BYP” indicator goes green and the load is powered through maintenance bypass and static bypass (for2-slot cabinet UPS, first close the output breaker Q4 before closing the bypass breaker Q2).

2) Turn off the maintenance bypass switch and the load is powered through the static bypass, and then turn on the main input breaker (if the main input and the bypass input come from a same breaker, please ignore this step), the rectifier will start, and for the process, please refer to chapter 4.1.1, finally close the external battery breaker.

4.4 Battery Maintenance

If batteries are not in use for a long time, it is necessary to test the condition of the battery. Two methods are provided:

1) Manual discharging test. Enter the “Operate” menu, as is shown in Figure 4-3 and touch the icon “Battery maintenance”

, the system transfers into battery mode for discharging. The system will stop discharging when batteries have 20% of capacity or in low voltage. Users can stop the discharging by touching the “Stop Test” icon

.

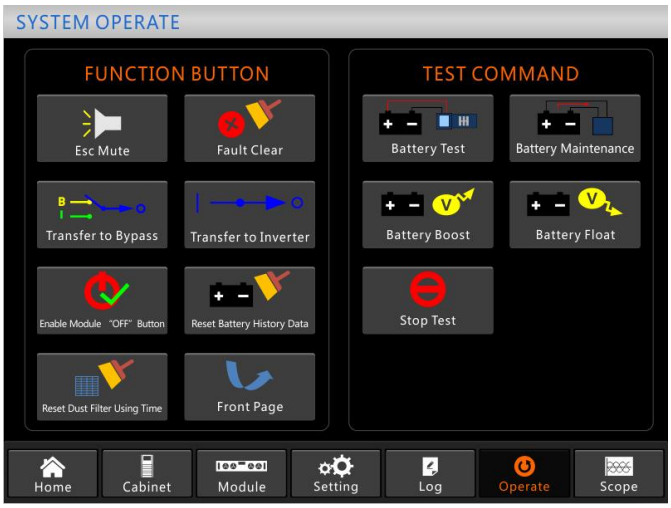

Figure 4-3 Battery maintenance

2) Auto discharging. The system can be set to discharge automatically per a certain time. The setting procedures are as follows.

a) Enable “battery auto discharge”. Enter the “CONFIGURE” page of the setting menu, tick “Battery Auto Discharge” and confirm (this needs to be done by factory).

b) Setting the period for “battery auto discharge”. Enter the “BATTERY” page of the setting (See Figure 4-4), set the period time in the item “Auto Maintenance Discharge Period” and confirm.

SEC.RU | Короткий путь к информации Скачано с sec.ru

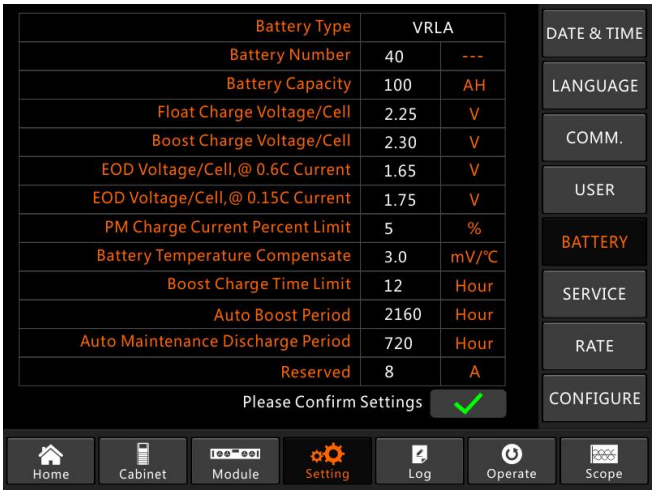

Figure 4-4 setting the period for battery auto discharge

Warning

The load for the auto maintenance discharge should be 20%-100%，if not, the system will not start the process automatically.

4.5 EPO

The EPO button located in the operator control and display panel (with cover to avoid the misoperation, see Figure 4-5) is designed to switch off the UPS in emergency conditions (e.g. fire, flood, etc.) To achieve this , just press the EPO button, and the system will turn off the rectifier, the inverter and stop powering the load immediately (including the inverter and the bypass), and the batteries stop charging or discharging.

If the input utility is present, the UPS control circuit will remain active; however, the output will be turned off. To completely isolate the UPS, users need to switch off the external mains input supply to the UPS. Users can restart the UPS by powering the UPS again.

Warning

When the EPO is triggered, the load is not powered by the UPS. Be careful to use the EPO function.

SEC.RU | Короткий путь к информации Скачано с sec.ru

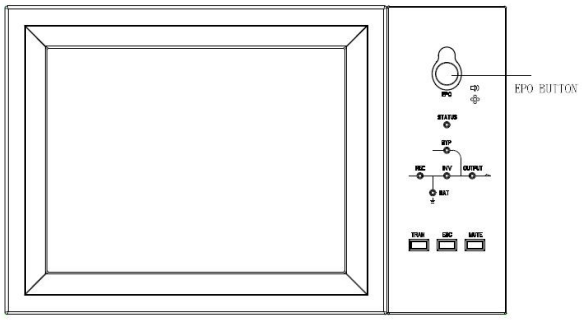

Figure 4-6 EPO Button

4.6 Installation of parallel operation system

For the 2-slot, 4-slot, 6-slot cabinet UPS system, normally 4 cabinets can be paralleled; and the parallel function is optional, if users need the function, please confirm the configuration with the supplier in advance. And for the 8-slot and 10-slot system, at most 3 cabinets can be paralleled. For the details of the parallel system, please refer to the annex “Instructions of the parallel system for the modular UPS”.

SEC.RU | Короткий путь к информации Скачано с sec.ru

5 Maintenance

This chapter introduces UPS maintenance, including the maintenance instructions of power module and monitoring bypass module and the replacement method of dust filter.

5.1 Precautions

Only maintaining engineers can maintain the power module and monitoring bypass module.
1) The power module should be disassembled from top to bottom, so as to prevent any inclination from high gravity center of the cabinet.
2) To ensure the safety before maintaining power module and bypass module, use a multi-meter to measure the voltage between operating parts and the earth to ensure the voltage is lower than hazardous voltage, i.e. DC voltage is lower than 60Vdc, and AC maximum voltage is lower than 42.4 Vac.
3) Bypass module is not recommended to hot swap; only when UPS is in Manual Bypass Mode or UPS is completely powered off, the bypass module can be disassembled.
4) Wait 10 minutes before opening the cover of the power module or the bypass after pulling out from the cabinet.

5.2 Instruction for maintaining power module

Confirm the UPS is operating in normal mode and the bypass is working normally before pulling out the power module needed to be repaired.
1) Ensure the remaining power module will not be overloaded.
2) Power off the module.

a) Enable. LCD panel ＞Menu ”Operate”

＞Enable Module “OFF” key

;

b) Press the “OFF” key for 3 seconds, the power module quits from the system.

3) Remove the mounting screw on the two front side of the power module (see Figure 2-11) and pull out the module by two persons.
4) Wait 5 minutes before opening the cover for maintenance.
5) After the maintenance, push the power module into the steps in section 2.3.2 and the power module will automatically join the system.

5.3. Instruction for Maintaining the monitor & bypass unit

5.3.1 Maintaining the monitor & bypass unit for 2-slot and 4-slot cabinet UPS

Confirm the UPS is operating in normal mode and the bypass is working normally.
Follow the steps below to maintain the monitor & bypass unit.
1) Switch the system into maintenance bypass mode. (Refer to Chapter 4.3.4), the load is powered

SEC.RU | Короткий путь к информации Скачано с sec.ru

by maintenance bypass.
2) Take out two power modules, which are close to the monitoring unit and the bypass unit, there will be enough space to maintain the monitor & bypass unit.
3) After the completion of maintenance, insert power modules and tighten the screws on both sides of the power module.
4) Switch the UPS into normal mode from maintenance bypass mode (Refer to Chapter 4.3.5).

5.3.2 Maintaining the monitor & bypass module for 6-slot, 8-slot and 10-slot cabinet UPS

Confirm the UPS is operating in normal mode and the bypass is working normally.

1) Switch the system into maintenance bypass mode. (Refer to Chapter 4.3.4), the load is powered by maintenance bypass.
2) For 6-slot and 8-slot cabinet, the monitor and the bypass system are together, it's named the monitor & bypass module, please pull out the module directly after removing the screws on both sides; for 10-slot cabinet, the monitor and the bypass are separate, please remove the screws on both sides, and then pull out them one by one.
3) After the completion of maintenance, insert back the modules and the reinstall back the screws.
4) Switch the UPS into normal mode from maintenance bypass mode (Refer to Chapter 4.3.5).

5.4 Battery maintenance

For the Lead-Acid maintenance free battery, when maintaining the battery according to requirements, battery life can be prolonged. The battery life is mainly determined by the following factors:
1) Installation. The battery should be placed in dry and cool place with good ventilation. Avoid direct sunlight and keep away from heat source. When installing, ensure the correct connection to the batteries with same specification.
2) Temperature. The most suitable storage temperature is 20 ℃ to 25℃.
3) Charging/discharging current. The best charging current for the lead-acid battery is 0.1C. The maximum charging current for the battery can be 0.2C. The discharging current should be 0.05C-3C.
4) Charging voltage. In most of the time, the battery is in standby state. When the utility is normal, the system will charge the battery in boost mode (constant voltage with maximum limited) to full and then transfers to the state of float charge.
5) Discharge depth. Avoiding deep discharge, which will greatly reduce the life time of the battery. When the UPS runs in battery mode with light load or no load for a long time, it will cause the battery to deep discharge.
6) Check periodically. Observe if any abnormality of the battery, measure if the voltage of each battery is in balance. Discharge the battery periodically.

SEC.RU | Короткий путь к информации Скачано с sec.ru

Warning

Daily inspection is very important!

Check and confirm the battery connection is tightened regularly, and make sure there is no abnormal heat generated from the battery.

Warning

If a battery has leakage or is damaged, it must be replaced, stored in a container resistant to sulfuric acid and disposed of in accordance with local regulations.

The waste lead-acid battery is a kind of hazardous waste and is one of the major contaminants controlled by government.

Therefore, its storage, transportation, use and disposal must comply with the national or local regulations and laws about the disposal of hazardous waste and waste batteries or other standards. According to the national laws, the waste lead-acid battery should be recycled and reused, and it is prohibited to dispose of the batteries in other ways except recycling. Throwing away the waste lead-acid batteries at will or other improper disposal methods will cause severe environment pollution, and the person who does this will bear the corresponding legal responsibilities.

5.5 Replacing dust filter (optional)

As shown in Figure 5-1, there are 3-4 dust filters on the back of the front door of the UPS, ach filter is held in place by a bracket on either side of each filter. The procedure of replacing each filter is as follows:

1) Open the front door and locate the filters on the back side of the front door.
2) Remove one bracket.
3) Remove the dirty dust filter and insert the clean one.
4) Reinstall the bracket.

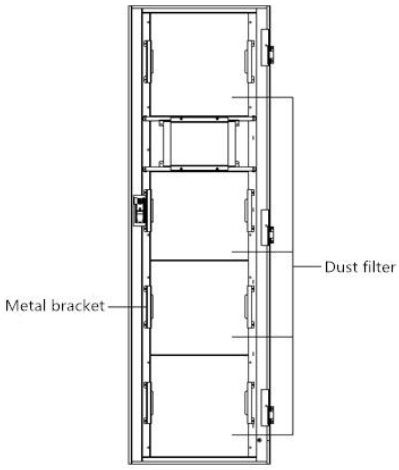

Figure 5-1 dust filters on the back side of the front door

SEC.RU | Короткий путь к информации Скачано с sec.ru

6 Product Specifications

This chapter provides the specifications of the product, including environment characteristics mechanical characteristics and electrical characteristics.

6.1 Applicable Standards

The UPS has been designed to conform to the following European and international standards:

Table 6-1 Compliance with European and International Standards

Item	Normative reference
General safety requirements for UPS used in operator access areas	IEC62040-1-1
Electromagnetic compatibility (EMC) requirements for UPS	IEC62040-2
Method of specifying the performance and test requirements of UPS	IEC62040-3

Note

The above mentioned product standards incorporate relevant compliance clauses with generic IEC and EN standards for safety (IEC/EN/AS60950), electromagnetic emission and immunity (IEC/EN61000 series) and construction (IEC/EN60146 series and 60950).

6.2 Environmental Characteristics

Table 6- 2 Environmental Characteristics

Item	Unit	Parameter
Acoustic noise level	dB	＜72dB @ 100% load, 69dB @ 45% load
Altitude of Operation	m	≤1000,load de-rated 1% per 100m from 1000m to 2000m
Relative Humidity	%	0-95, non condensing
Operating Temperature	℃	0-40(for UPS only),Battery life is halved for every 10°C increase above 20°C
UPS Storage	℃	-40-70

SEC.RU | Короткий путь к информации Скачано с sec.ru

6.3 Mechanical Characteristics

Table 6-3 Mechanical Characteristics for Cabinet

Model	Unit	2-slot	4-slot	6-slot	8-slot	10-slot
Mechanical Dimension (W*D*H)	mm	600*980 *1150	650*960 *1600	650*970 *2000	1050*1100* 2000	1300*1100 *2000
Weight	kg	120	170	220	335	450
color	N/A	RAL7021,Black				
Protection	N/A	IP20				

Table 6-4 Mechanical Characteristics for Power Module

Item	Unit	Power Module
Mechanical Dimension, W*D*H	mm	510*700*178
Weight	kg	45

6.4 Electrical Characteristics

6.4.1 Electrical Characteristics (Input Rectifier)

Table 6-5 Rectifier AC input Mains

Item	Unit	Parameter
Grid System	\	3 Phases + Neutral + PE
Rated AC Input Voltage	Vac	380/400/415(three-phase and sharing neutral with the bypass input)
Rated Frequency	Vac	50/60Hz
Input Frequency range	Hz	40~70
Input Power factor	PF	>0.99

6.4.2 Electrical Characteristics (Intermediate DC Link)

SEC.RU | Короткий путь к информации Скачано с sec.ru

Table 6- 6 Battery

Items	Unit	Parameters
Battery bus voltage	Vdc	Rated：±240V
Quantity of lead-acid cells	Nominal	40=[1 battery(12V)] ,240=[1 battery(2V)]
Float charge voltage	V/cell （VRLA）	2.25V/cell(selectable from 2.2V/cell～2.35V/cell) Constant current and constant voltage charge mode
Boost charge voltage	V/cell （VRLA）	2.3V/cell(selectable from : 2.30V/cell~2.45V/cell) Constant current and constant voltage charge mode
Temperature compensation	mV/°C/cl	3.0(selectable:0~-5.0)
Final discharging voltage	V/cell （VRLA）	1.65V/cell(selectable from: 1.60V/cell~1.750V/cell) @0.6C discharge current 1.75V/cell (selectable from: 1.65V/cell~1.8V/cell) @0.15C discharge current (EOD voltage changes linearly within the set range according to discharge current)

Note

The default battery number is 40.When the actual battery in use is 32-44, ensure the actual number and the set number is the same, otherwise, batteries may be damaged.

6.4.3 Electrical Characteristics (Inverter Output)

Table 6- 7 Inverter Output (To critical load)

Item	Unit	Parameter
Rated capacity	kVA	40~500
Rated AC voltage	Vac	380/400/415 (Line-Line)
Rated Frequency	Hz	50/60
Frequency Regulation	Hz	50/60Hz±0.1%

6.4.4 Electrical Characteristics (Bypass Mains Input)

Table 6- 8 Bypass Mains Input

Item	Unit	2-slot Cabinet and 4-slot Cabinet	6-slot, 8-slot and 10-slot Cabinet
Rated AC voltage	Vac	380/400/415 (three-phase four-wire and sharing neutral with the bypass)	

SEC.RU | Короткий путь к информации Скачано с sec.ru

Rated Current	A	121~758(Table2-2)	
Overload	%	125%, Long term operation 125%~130%, for 10 min 130%~150%, for 1min >150%,300ms	110%, Long term operation 110%~125%，for 5 min 125%~150%，for 1 min >150%,1S
Current rating of neutral cable	A	1.7×In	
Rated frequency	Hz	50/60	
Switch time (between bypass and inverter)	ms	Synchronized transfer: 0ms	
Bypass voltage range	%	Settable, default -20%~+15% Up limited: +10%, +15%, +20%, +25% Down limited: -10%, -15%, -20%, -30%, -40%	
Bypass frequency range	Hz	Settable, ±1Hz, ±3Hz, ±5Hz	

6.5 Efficiency

Table 6- 9 Efficiency

System Efficiency		
Normal mode(dual conversion)	%	96 (max)
Battery discharging efficiency (battery at nominal voltage 480Vdc and full-rated linear load)		
battery mode	%	96 (max)

6.6 Display and Interface

Table 6-10 Display and Interface

Display	LED + LCD +Color touch screen
Interface	Standard:RS232, RS485, USB, Dry Contact Option: SNMP,AS400

SEC.RU | Короткий путь к информации Скачано с sec.ru