Specification

Model	TR-JB602
Material	Alluminium alloy ADC12
Dimensions	170 mm x 130 mm x 71 mm
Gross weight	1385 g
Net weight	1260 g
Working temperature	-40°C ... +70°C
Working humidity	<90% (RH)
Colour	White

Basic equipment

Junction box	1 pcs.
Mounting kit	1 pcs.
Datasheet	1 pcs.

Dimensions

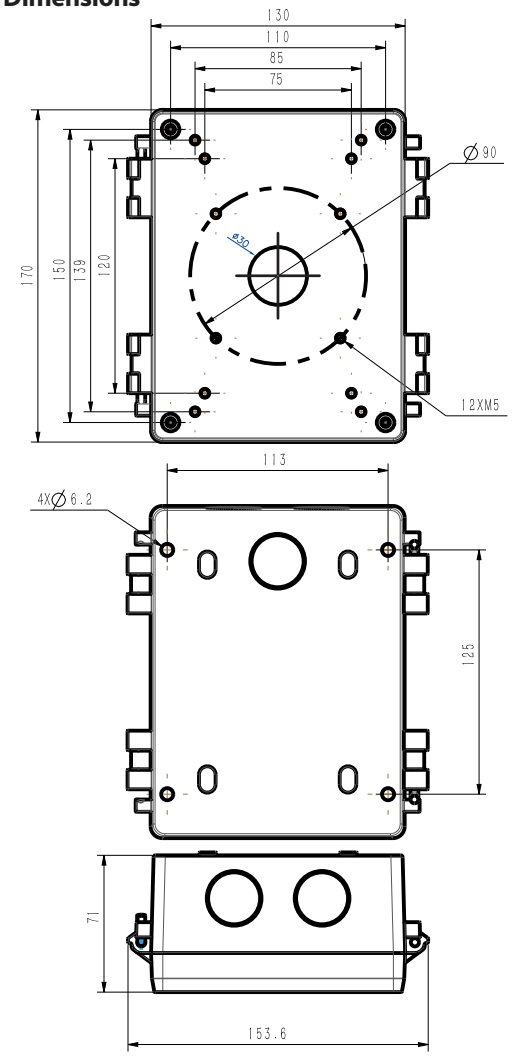

Features

- Made of alluminium alloy
- Cabling inside the junction box
- Cabling both through the bottom and through the side of the box is available
- Enhanced moisture protection (watertight sealing ring and grommet included)

TR-JB602

Junction box

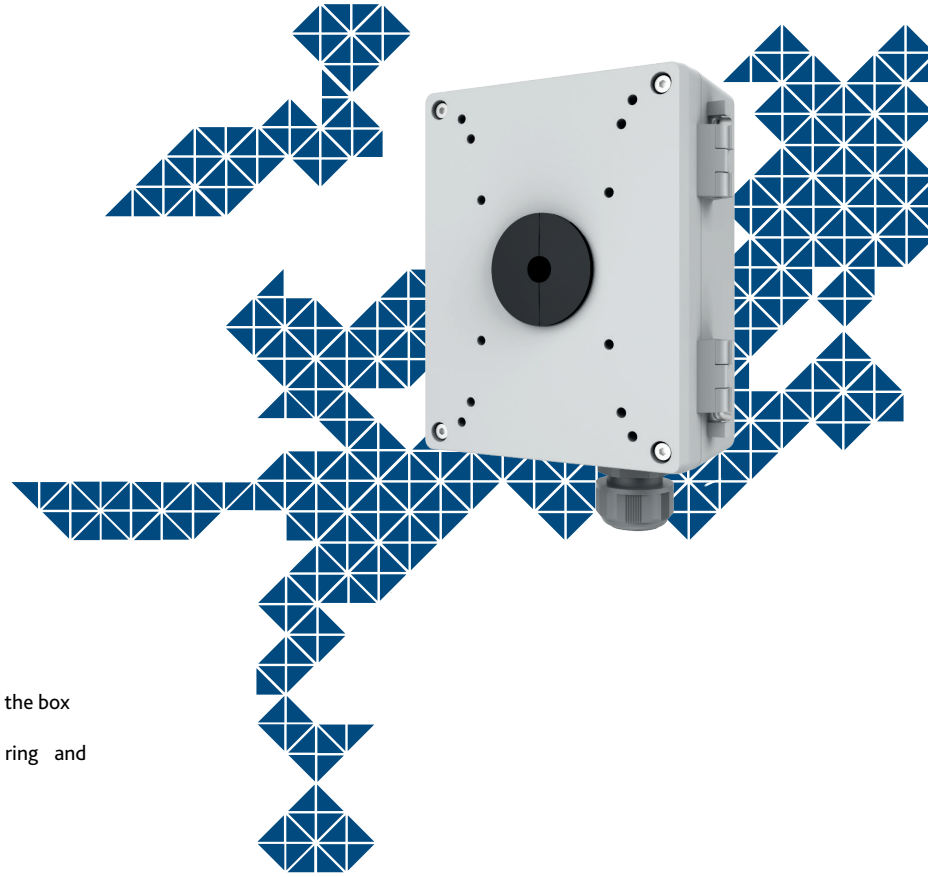

SEC.RU | Короткий путь к информации
Скачано с sec.ru